VALVE & FITTING LEGEND

NOTE: ALL SYMBOLS MAY NOT APPEAR ON DRAWINGS

Symbol	Description
	TEST PLUG (TEMP. & PRESSURE)
	BALL VALVE
	COCK VALVE, 1/4" BRASS
S	SOLENOID VALVE
	CHECK VALVE
	GAS COCK
	GATE VALVE
	BUTTERFLY VALVE
M	MOTORIZED BUTTERFLY VALVE
	THERMOMETER
HB	HOSE BIBB
WH	WALL HYDRANT
YH	YARD HYDRANT
SHD	SHOWER DRAIN
FD	FLOOR DRAIN
AD	AREA DRAIN
RD	ROOF DRAIN
ORD	OVERFLOW ROOF DRAIN
HD	HUB DRAIN
VTR	VENT THRU ROOF
FCO	CLEANOUT IN FLOOR
CO	CLEANOUT IN LINE
GCO	CLEANOUT AT GRADE
WCO	CLEANOUT IN WALL
	WYE STRAINER W/BALL VALVE BLOW DOWN
	UNION
	FLANGE CONNECTION
	PRESSURE GAUGE W/ 1/4" BALL VALVE
1/4"	DIRECTION OF SLOPE W/INCHES/FT. DROP
BFP	BACKFLOW PREVENTER
	FLEXIBLE CONNECTION
AAV	AUTOMATIC AIR VENT W/BALLVALVE STOP
	FIELD FABRICATED SHOCK ARRESTOR, 24" HIGH, LINE SIZE

PIPING LEGEND

NOTE: ALL SYMBOLS MAY NOT APPEAR ON DRAWINGS

Symbol	Description
S	SANITARY SEWER
GW	GREASY WASTE
	PLUMBING VENT
SD	STORM DRAIN
OSD	OVERFLOW STORM DRAIN
•	DOMESTIC COLD WATER (CW)
••	DOMESTIC HOT WATER (HW)
•••	DOMESTIC HOT WATER RECIRCULATION
W	WATER SERVICE LINE
A	AIR LINE
F	FIRE LINE
G	GAS LINE
RL	REFRIGERANT LIQUID LINE
RS	REFRIGERANT SUCTION LINE
CHS	CHILLED WATER SUPPLY
CHR	CHILLED WATER RETURN
HWS	HEATING WATER SUPPLY
HWR	HEATING WATER RETURN
CS	COOLING WATER SUPPLY
CR	COOLING WATER RETURN
	DIRECTION OF FLOW
D	EQUIPMENT OR FIXTURE DRAIN LINE
	SUBSOIL DRAIN
V	VACUUM
N	NITROGEN
O	OXYGEN
	UNDERFLOOR
HPS	HIGH PRESSURE STEAM
HPR	HIGH PRESSURE CONDENSATE RETURN
LPS	LOW PRESSURE STEAM
LPR	LOW PRESSURE CONDENSATE RETURN
P	PUMPED WASTE OR STORM FLOW
PD	PUMPED A/C CONDENSATE DRAIN
AW	ACID WASTE
AV	ACID VENT
	PT. OF CONN. NEW TO EXISTING
W	WATER METER
G	GAS METER
(250)	LBS/OZS. GAS REGULATOR 250 CFH FLOW, VENTED TO OUTDOORS
	DOM. WTR. SUPPLY WITH CHROME STOP KIT AND CONN. TO FIXTURE
	PIPE TURN, DOWN
	PIPE TURN, UP
	PIPE TURN, DBL 90° ELLS
	PIPE TURN, UP FROM TEE
	PIPE RUN, TEE DOWN
	CHANGE IN PIPE SIZE

ELECTRICAL SYMBOL LEGEND

NOTE: ALL SYMBOLS MAY NOT APPEAR ON DRAWINGS

SYMBOL	DESCRIPTION	SYMBOL	DESCRIPTION
	FLUORESCENT LIGHT FIXTURE		DUPLEX RECEPTACLE
	FLUORESCENT STRIP LIGHT FIXTURE		QUADRAPLEX RECEPTACLE
	EXIT LIGHT FIXTURE		SINGLE RECEPTACLE
	WALL WASHER / DOWNLIGHT		FLUSH FLR. MTD. DUPLEX RECEPT.
E	EMERGENCY BATTERY PACK FIXTURE DESIG. (1100 LUMENS MIN. EACH) FOR FLUORESCENT FIXTURE		SPECIAL PURPOSE RECEPTACLE
	EXIT LIGHT FIXTURE DENOTES DIRECTION		JUNCTION BOX
NL	NIGHT LIGHT FIXTURE DESIGNATION		WALL FLUSH MOUNTED JUNCTION BOX
$	SINGLE POLE SWITCH		PLUGMOLD W/OUTLETS 12" O.C. U.N.O.
$2	DOUBLE POLE SWITCH		TELEPHONE OUTLET (J-BOX WITH 3/4" C. TO 12" ABV. CLG. TURNED 90°)
$3	THREE-WAY SWITCH WITH TRAVELERS		FLUSH FLR. MTD. TELE. OUTLET
$4	FOUR-WAY SWITCH		PAY OR WALL TELEPHONE OUTLET (J-BOX WITH 3/4" C. TO 12" ABV. CLG. TURNED 90°)
$P	SWITCH WITH PILOT LIGHT		HEAT DETECTOR
$M	MOTOR RATED SWITCH		3/4" THICK TELEPHONE BOARD
$K	KEYED SWITCH	T	TRANSFORMER
$D	DIMMER SWITCH		SMOKE DETECTOR
	BRANCH PANELBOARD (SINGLE SECT.)	F	PULL STATION
	BRANCH PANELBOARD (DOUBLE SECT.)		SPEAKER (F - DENOTES FIRE ALARM).
	BRANCH PANELBOARD (TRIPLE SECT.)	TV	TELEVISION OUTLET
			CLOCK OUTLET
S	STROBE		DENOTES CONNECTION (NOT A JOINT)
	HORN/STROBE		DATA OUTLET (J-BOX WITH 3/4" CONDUIT TO 12" ABOVE CEILING TURNED 90°)
LA-3	HOMERUN TO PANEL	42"	MOUNTED 42" AFF TO LOWEST EDGE OF COVERPLATE
	CONDUIT WITH NEU, HOT, SW.LEG & GRND.		GROUND FAULT INTERRUPTER
	GROUND WIRE	WP	WEATHERPROOF
	CONTROL WIRING		ISOLATED GROUND RECEPTACLE
	ELECTRICAL CONNECTION TO EQUIP.	AFF	ABOVE FINISHED FLOOR
	MOTOR	C.	CONDUIT
	NON-FUSED DISCONNECT SWITCH	Ø	PHASE
	FUSED DISCONNECT SWITCH	G.	GROUND WIRE
	MOTOR STARTER		CONDUIT UNDERFLOOR
	COMB. STARTER/DISCONNECT SWITCH		CEILING FAN
(ON L-2)	PART OF CIRCUIT ELSEWHERE	$1/3	1/3---DENOTES PARTIAL SWITCHING OF EACH FIXTURE
		#10	AWG SIZE
		PB	PUSH BUTTON

ALSO REFER TO WIRING SCHEDULE FOR WIRE & CONDUIT SIZES

•SHOWN ON HOMERUNS, BRANCH CIRCUITS AND SWITCH LEGS TO INDICATE INTENT. PROVIDE ALL REQUIRED CONDUCTORS.

DISCONNECT LEGEND: DISCONNECT RATING—30/20F/3/3R — # OF POLES, ENCLOSURE RATING, FUSE RATING { NF= NON-FUSED

COOLING TOWER SCHEDULE

DESIG-NATION	HEAT REJECTION BTUH	AMB WB	WATER GPM	WATER EWT TEMP	WATER LWT TEMP	FAN NO.	FAN DIA.	MOTOR NO.	MOTOR HP	MOTOR ELECTRICAL VOLT	MOTOR ELECTRICAL PHASE	MANUFACTURER & MODEL NO.	GROSS WT.	REMARKS
CT-1	3295,000	78	459	95	85	1	60"	1	7.5	480	3	CERAMIC XL75P3	7,800	REF. SPEC.

PUMP SCHEDULE

DESIG-NATION	SERVES	LOCATION	GPM	TOTAL HEAD, FT.	PUMP EFF.	MOTOR HP	MOTOR RPM	ELECTRICAL VOLT	ELECTRICAL PHASE	WEIGHT	MANUFACTURER & MODEL NO.	REMARKS
RWP-1	HX-1	MECH.RM	104	36	63%	2	1750	480	3	240	B&G SERIES 90/2A	REF. SPECS

HEAT-X SCHEDULE

DESIG-NATION	TYPE	HOT SIDE (R-22) LB/h	°F IN	°F OUT	PD PSI	FOULING FACTOR	COLD SIDE (H_2O) GPM	EWT	LWT	PD-FT	FOULING FACTOR	MANUFACTURER & MODEL NUMBER	REMARKS
HX-1	PLATE	9581	180	116	1.1	0.00	104	65	85	18.5	0.0001	B&G BPR422-62	REF. SPEC.

POWERED INDUCTION BOX SCHEDULE

DESIG-NATION	NOMINAL COOLING CFM @ 0.5 E.S.P.	CLG. MIN. CFM	INLET SIZE	FAN SIZE FLOW SPEED	FAN VOLT	FAN PHASE	HEATER GPM	HEATER ROW/ΔP	MANUFACTURER & MODEL NO.	REMARKS
1→4	1700	400	10"Ø	11 / 900 / M	277	1	2	1/1	TRANE PAR1711277 3SPD DD03	REF. SPECS.
5→8 11,12	600	60	6"Ø	07 / 400 / L	↓	↓	1	1/0.2	TRANE PAR0607277 3SPD DD03	
9,10,13	1100	250	8"Ø	11 / 600 / L	↓	↓	1	1/0.2	TRANE PAR1111277 3SPD DD03	↓

O/A SCHEDULE

AHU	O/A CFM
2	250
3	200
1,6	500
7	500
8	150
9	160

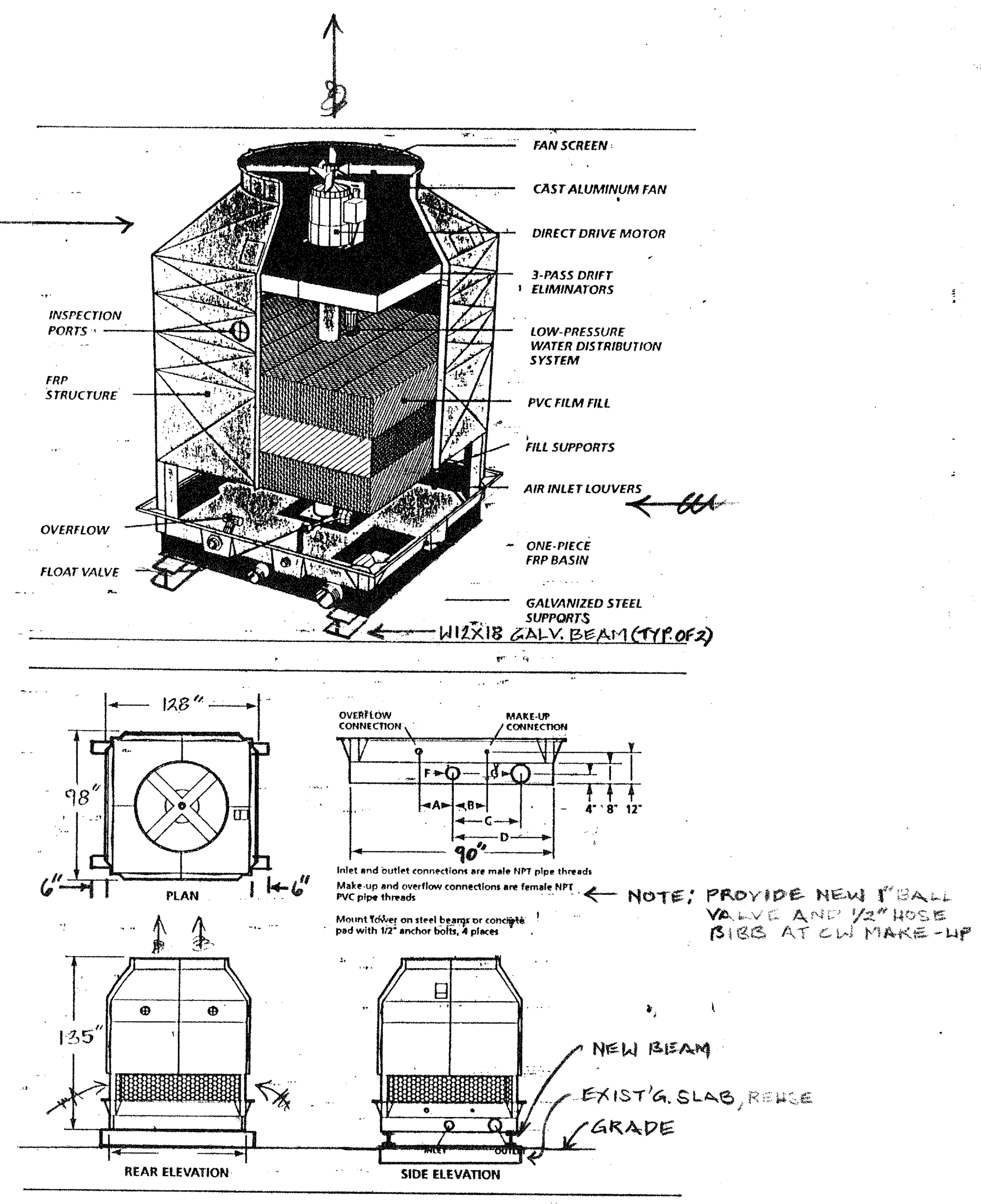

3 COOLING TOWER DETAIL
NO SCALE

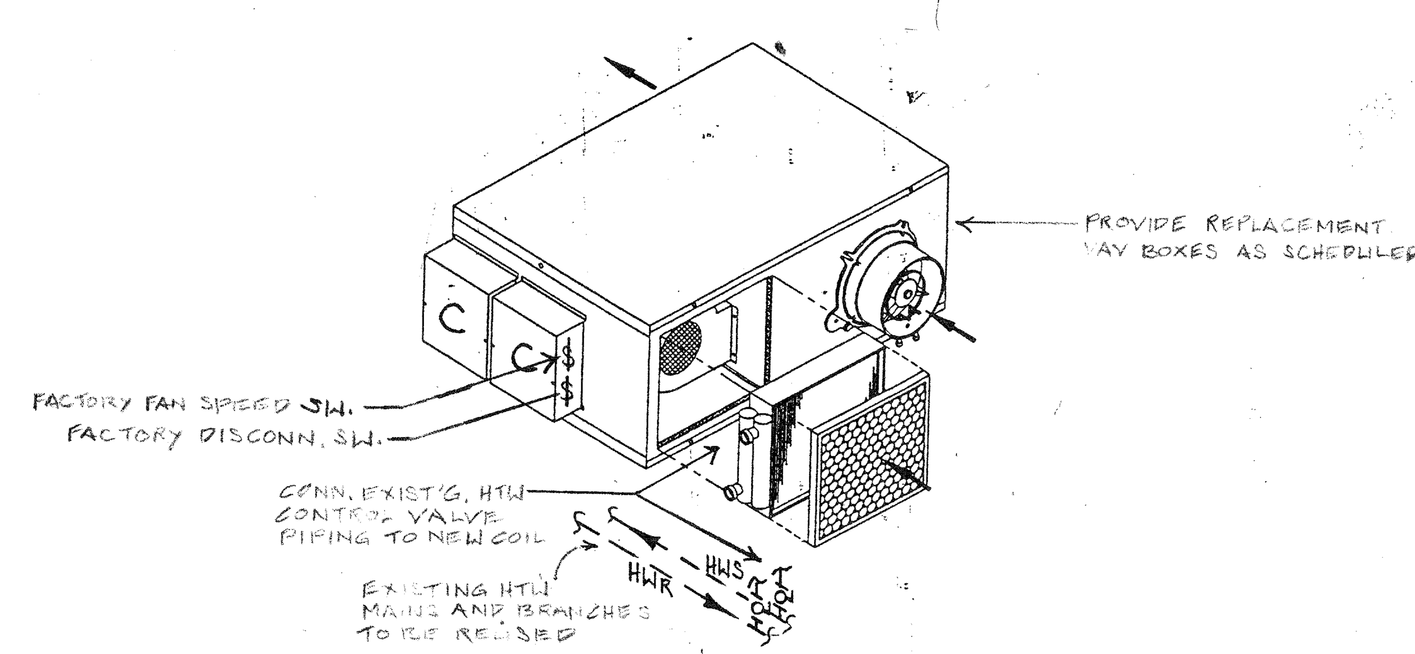

1 PIB DETAIL
NO SCALE

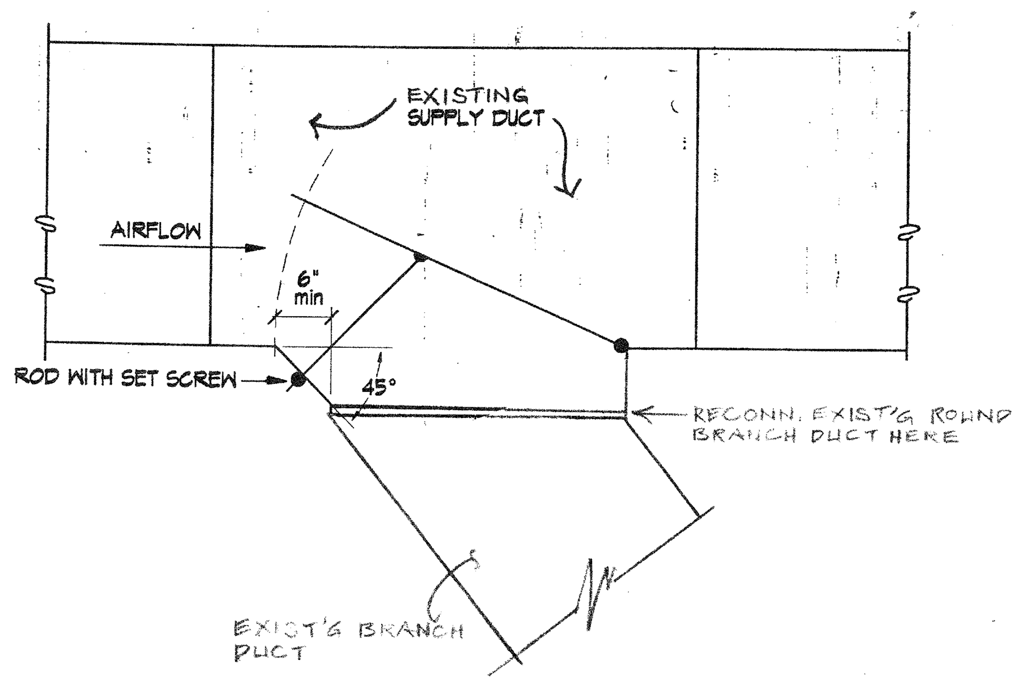

6 DIVERTER DETAIL
NO SCALE

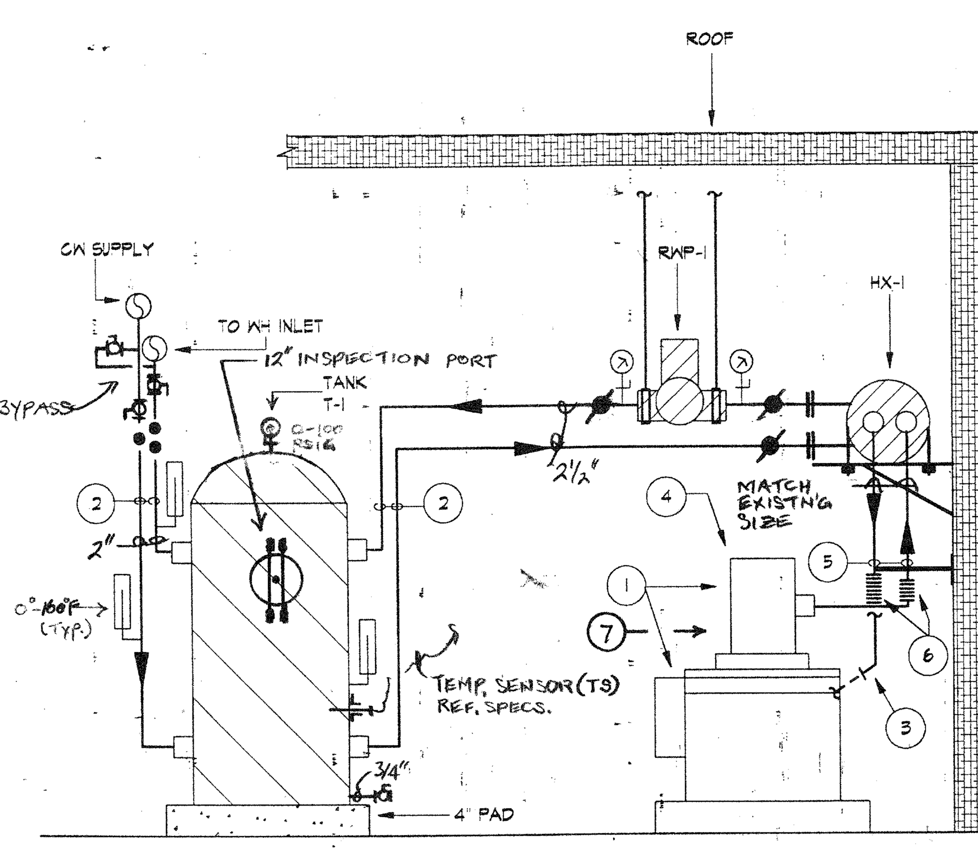

KEYNOTES

1. EXISTING CHILLER AND COMPRESSOR #2 TO BE REUSED.
2. ROUTE NEW WATER PIPING AS SHOWN.
3. RECONNECT REFRIGERANT DISCHARGE PIPING TO CONDENSER INLET.
4. PROVIDE REPLACEMENT COMPRESSOR FOR CHILLER CIRCUIT #1 AS SPECIFIED.
5. ROUTE COMPRESSOR #2 REFRIGERANT DISCHARGE PIPING THRU HEAT EXCHANGER.
6. PROVIDE VIBRATION ABSORBERS, SECURE ONE END OF ABSORBER TO WALL AS SHOWN.
7. PROVIDE ONE REPLACEMENT COMPRESSOR AS SPECIFIED.

2 DESUPERHEATER PIPING SCHEMATIC
NO SCALE

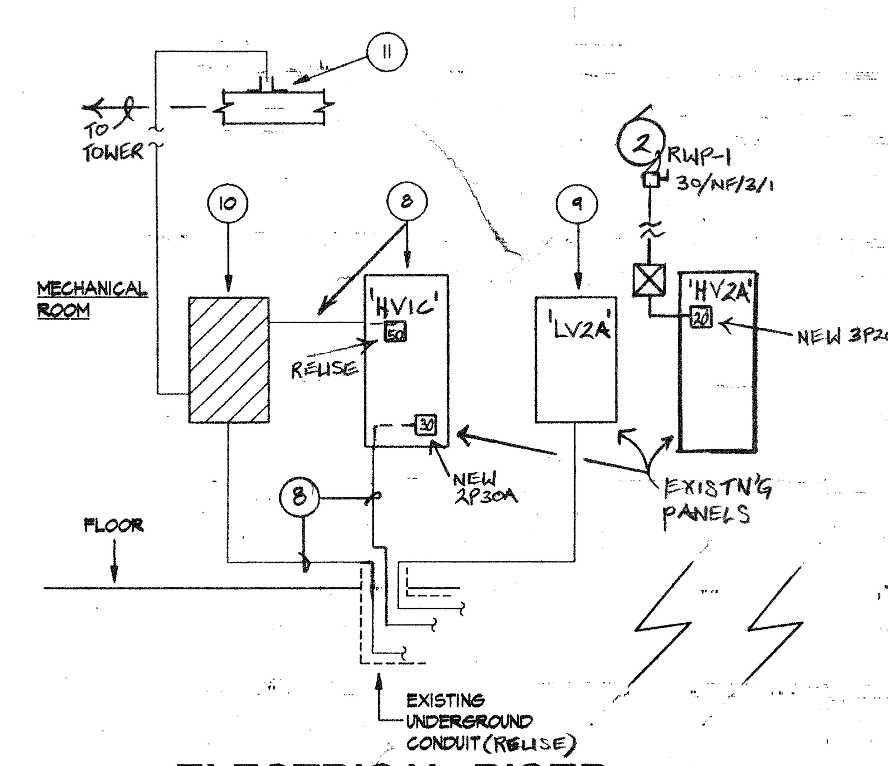

4 ELECTRICAL RISER AT MECH. ROOM
NO SCALE

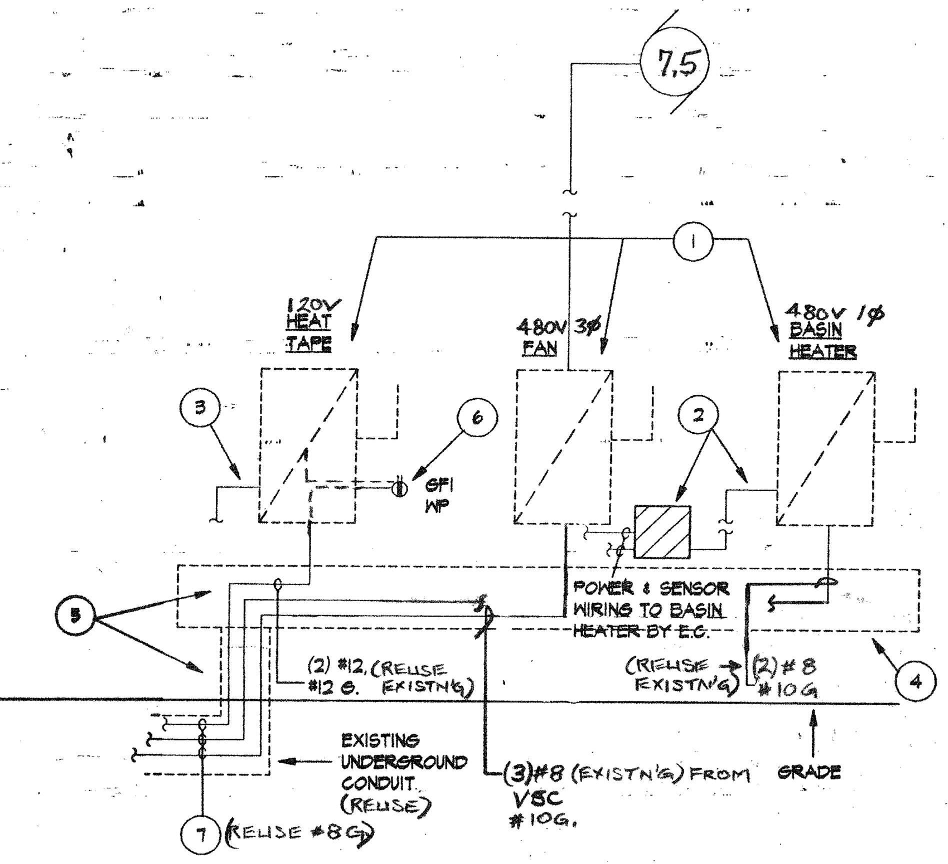

5 ELECTRICAL RISER AT COOLING TOWER
NO SCALE

KEYNOTES

1. RELOCATE / REUSE EXISTING DISCONNECT.
2. ROUTE CIRCUIT TO NEW FACTORY WIRED BASIN HEATER CONTROL BOX ON NEW TOWER.
3. ROUTE CIRCUIT TO NEW HEAT TAPE, THRU-FEED VIA NEW GFCI RECEPTACLE.
4. RELOCATE / REUSE EXISTING WIREWAY TO NORTH END WALL OF NEW TOWER.
5. REWORK EXISTING CONDUIT TO RE-SERVE RELOCATED WIREWAY.
6. PROVIDE NEW RECEPTACLE AS SPECIFIED.
7. REUSE EXISTING CONDUCTORS, CONN. CIRCUITS AS SHOWN FROM MECH. ROOM IN EXISTING CONDUIT.
8. REARRANGE EXISTN'G (5) #8 CONDUCTORS TO USE AS SHOWN
9. NEW RECEPTACLE AND HEAT TAPE CIRCUIT WITH NEW 1P 20A C.B. IN EXISTING PANEL.
10. PROVIDE VSC AS SPECIFIED FOR NEW TOWER FAN. (VSC BY M.C.)
11. PROVIDE TEMPERATURE SENSOR (RANGE 0 - 100 F) IN EXISTING CONDENSER PIPING FOR FAN SPEED CONTROL. LOCATE SENSOR DOWNSTREAM OF EXISTING TOWER BYPASS VALVE. FIELD VERIFY PROPER OPERATION OF EXSITING BYPASS VALVE, REPORT DEFECTS TO ENGINEER.

SHEET NO. BASE | COMPOSITE C L A S S M E

ADDISON RECREATION CENTER
3900 BELTWAY DRIVE
ADDISON, TEXAS

AGC Plan Room #079 Feb-10 2L

TOWN OF ADDISON

Phoenix Engineering
HVAC • Refrigeration • Electrical
Consulting Engineers
Dallas, Texas
(214) 956-0204
Fax: 956-0207

sheet title: GROUND FLOOR HVAC PLAN

drawn
chk'd
date 1/16/97
revisions
no. date

ME-1