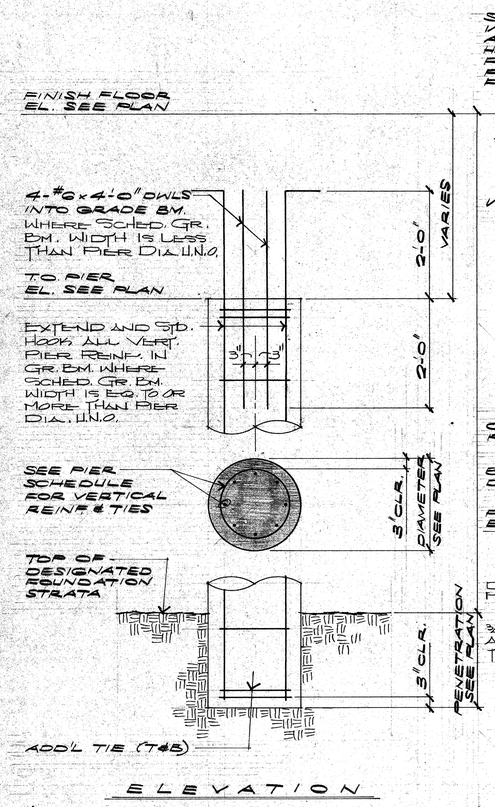

ELEVATION

SCHEDULE			
DIAMETER (INCHES)	REINFORING VERTICAL	REINFORING TIES	REMARKS
18	6-#9	#4@12"	
24	6-#11	#4@12"	

STRAIGHT SHAFT PIER

06 TYPICAL DETAIL

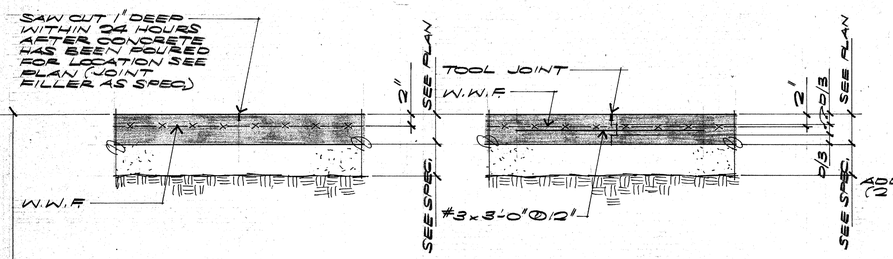

SLAB CONTROL/CONSTRUCTION JOINTS

01 TYPICAL DETAIL

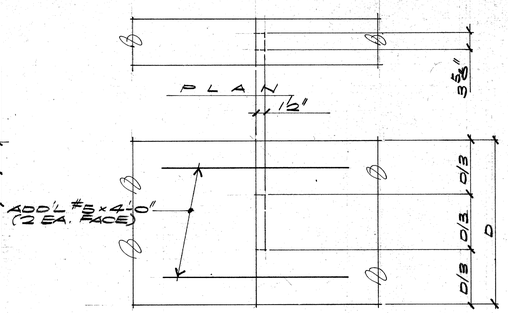

ELEVATION

GRADE BEAM CONSTRUCTION JOINT

02 TYPICAL DETAIL

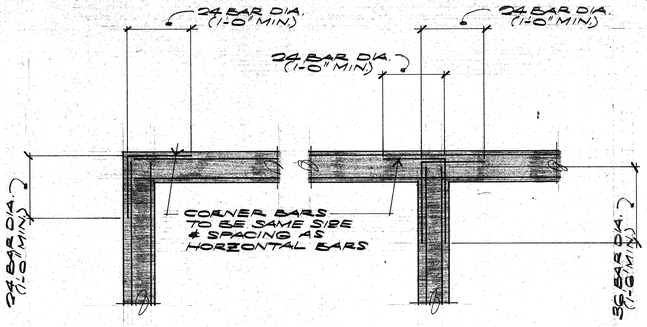

ADDITIONAL CORNER BARS

03 TYPICAL DETAIL

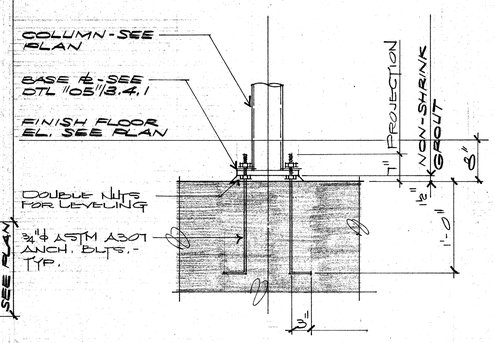

04 TYPICAL DETAIL

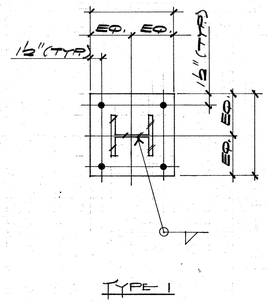

TYPE 1

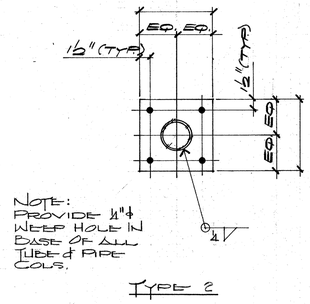

NOTE: PROVIDE ¼"ϕ WEEP HOLE IN BASE OF ALL TUBE & PIPE COLS.

TYPE 2

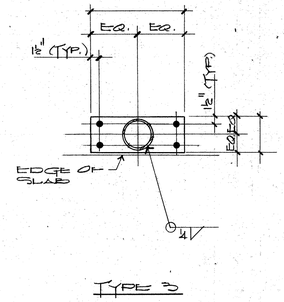

TYPE 3

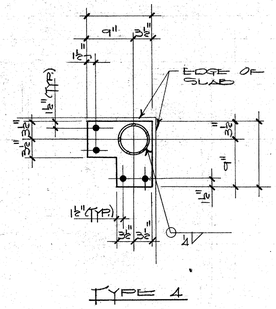

TYPE 4

05 BASE PLATE DETAILS

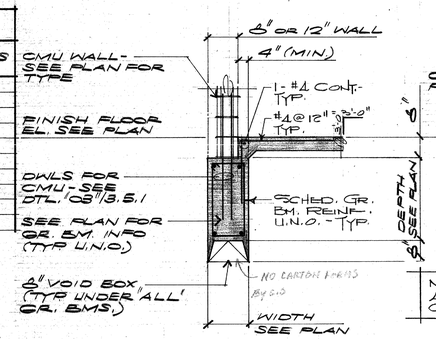

07 SECTION

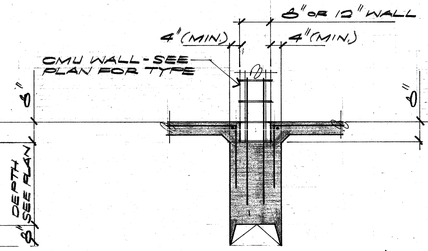

NOTE: THEATRE WALLS MAY START ABOVE SLAB ON GRADE - GENERAL CONTRACTOR'S OPTION

08 SECTION

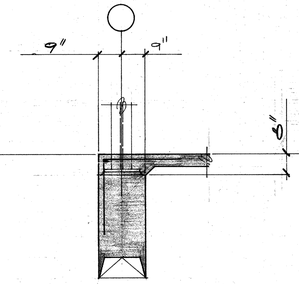

09 SECTION

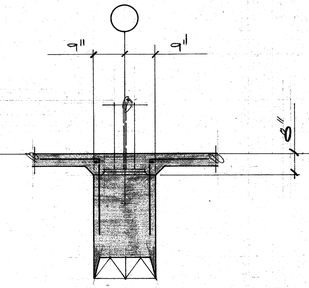

10 SECTION

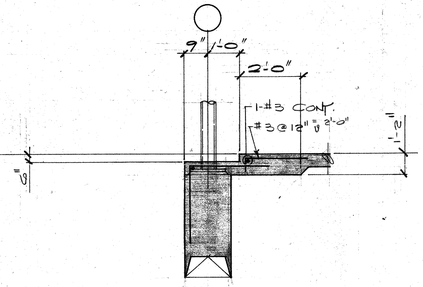

11 SECTION

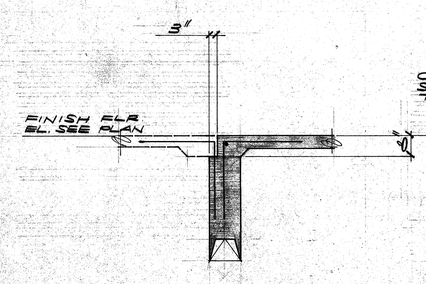

12 SECTION

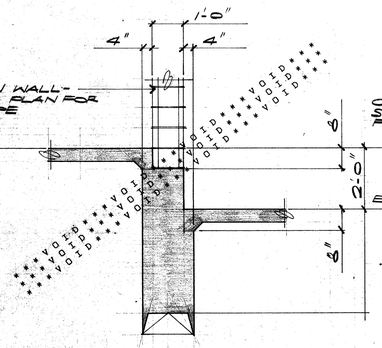

13 SECTION

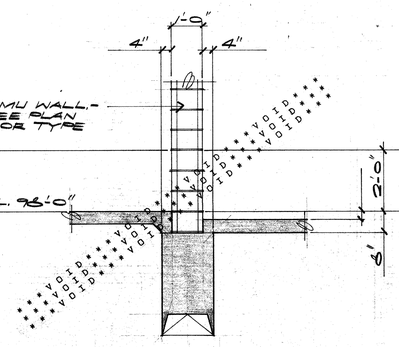

14 SECTION

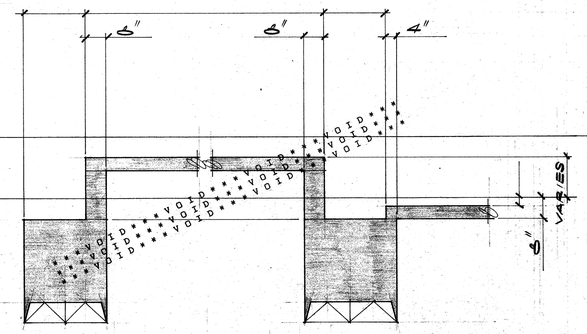

15 SECTION

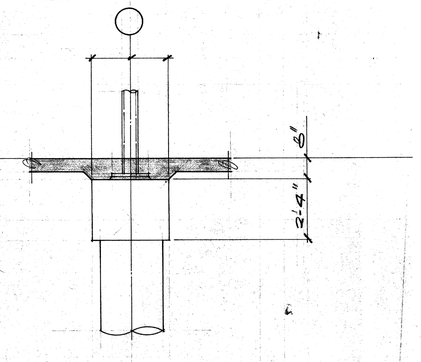

16 SECTION

STATE OF TEXAS — JOHN L. TANNER III — 9325 — REGISTERED PROFESSIONAL ENGINEER

STATE OF TEXAS — HARRY A. LEE — 62125 — REGISTERED PROFESSIONAL ENGINEER — 8-16-90

ACC • ACT

ADDISON

OWNER
Town of Addison

ARCHITECT
Cunningham Architects
2700 Fairmount
Dallas, Texas 75201
214-855-5272

LANDSCAPE
The Kellams Group
317-776-1417

THEATRE CONSULTANT
Theatre Projects
203-431-3943

INTERIORS
CRSS
713-552-2000

STRUCTURAL
Elisor Tanner
214-387-8393

M.E.P.
MEP Systems
214-754-4741

CIVIL
Kurtz & Associates
214-690-3322

HISTORIAN
Alan Mason
214-691-7182

LIGHTING
Pamela Hull Wilson
214-823-6542

GRAPHICS
Nottestad Design
214-954-1978

Issue	Category	Subcategory	Sheet
ISSUE FOR BID 8-17-90	3	4	1