SWITCH 'MSB' SCHEDULE		(L)IGHTING			RECPT	(M)OTORS		KITCHN	HEAT	A/C	COMPUT EQUIP	WATER HEATER	OTHER	SPARE	SPACE	CONNECTED LOAD				
NO	DESCRIPTION	L	T	E	R	G	M	K	H	A	C	W	O	S	P	KVA	AMP	POLES	SWTCH	FUSE
1	TRANSFORMER 'TD'		276													276	333	3	800	500
2	TRANSFORMER 'TP'	52	0	19	32	0	34	15	45	0	6	0	69	10	15	272	327	3		
3	PANEL '1M'	11	0	5	0	0	1	0	0	150	0	0	0	0	39	167	201	3	400	
4	PANEL '2M'	3	0	2	0	0	2	0	25	50	0	0	0	0	38	82	99	3	200	150
5	SWITCHBOARD 'CSB'	43	0	14	123	0	15	17	78	199	0	0	2	8	6	492	591	3	800	
6	SPARE														160	0	0	3	400	
	TOTAL CONNECTED LOADS:	110	276	39	155	0	52	31	149	399	6	0	71	19	258	1289	1550			1600

LOAD DESCRIPTION	C_KVA	N_S_LD	A_KVA	A_AMPS	C_WPSF	DIV	D_KVA	D_AMP	D_WPSF	FILE INFORMATION	SUMMARY
(L) LIGHTING	110	1.00	110	132	2.3	1.25	137	165	2.9	JOB NAME: ACC/ACT	3P. 4W. W/ GROUND BUS
(T) TASK LIGHTING	276	1.00	276	333	5.8	1.25	346	416	7.2	LOCATION: ADDISON	
(E) EXTERIOR LTG, SIGNS	39	1.00	39	47	0.8	1.25	49	59	1.0	SQUARE FT: 48000	VOLTAGE: 480Y/277
(R) RECEPTACLES	155	1.00	155	187	3.2	0.53	83	99	1.7	JOB NUMBER: 90016	BRACING: 100 K AIC
(G) GROUPED MOTORS	0	1.00	0	0	0.0	1.00	0	0	0.0	DESIGN BY: WMS	MAINS: MLO
(M) SINGLE MOTORS	52	1.00	52	63	1.1	1.00	52	63	1.1	INPUT BY: MSS	AMPS:
(M) 25% LARGEST MOTOR	::::::	::::::	::::::	::::::	::::::	0.25	8	10	0.2	FILE NO: 0016MSB	
(K) KITCHEN EQUIPMENT	31	1.00	31	38	0.7	0.65	20	25	0.4		STATUS: NEW
(H) HEAT: 149 kVA	149	0.25	37	45	0.8	1.00	37	45	0.8		TYPE: -
(A) A/C EQUIP: 399 kVA	399	1.00	399	480	8.3	1.00	399	480	8.3		MOUNTED: SURFACE
(C) COMPUTER EQUIPMENT	6	1.00	5.7	7	0.1	1.00	6	7	0.1		LOCATED: ELECTRIC ROOM
(W) WATER HEATERS	0	1.00	0	0	0.0	1.00	0	0	0.0		SERVED FROM: MAIN SERVICE
(O) OTHER	71	1.00	70.8	85	1.5	1.00	71	85	1.5		UPST. DEVICE: UTILITY COMP.
(S) SPARE: 19 kVA	::::::	::::::	::::::	::::::	::::::	1.00	19	22	0.4		
(P) SPACE: 258 kVA	::::::	::::::	::::::	::::::	::::::	0.50	129	155	2.7	PRINT HISTORY	ORIGINAL FORM: 6 Sep 88
										DATE: TIME:	LAST REVISION: 3 Aug 89
TOTALS:	1289	::::::	1177	1416	24.5	::::::	1356	1631	28	08/16 14:13	FORM NUMBER: 9000SB03

COPYRIGHT (C) WILLIAM M. STEVENS AND BARRY L. MANN, P.E., 1988 ALL RIGHTS RESERVED

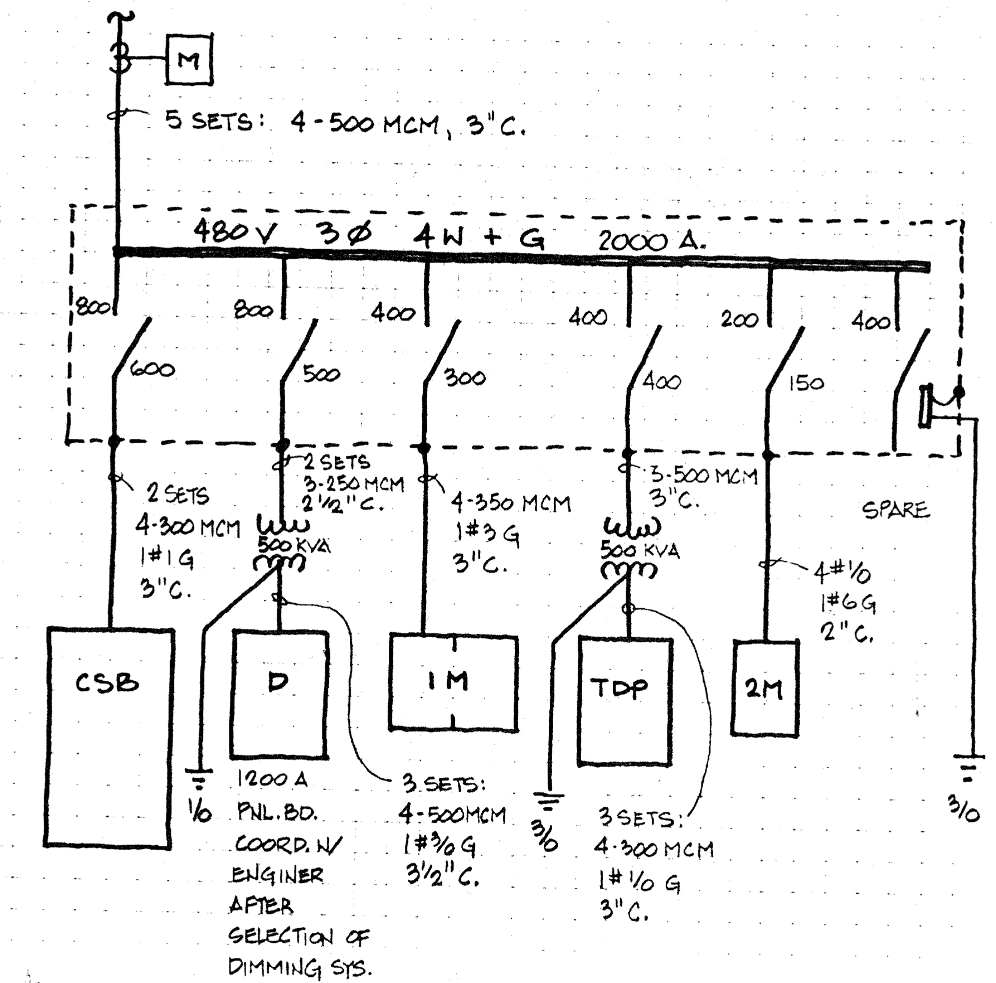

MAIN SWITCHBOARD 'MSB' ONE-LINE

SWITCHBOARD 'CSB' SCHEDULE		(L)IGHTING			RECPT	(M)OTORS		KITCHN	HEAT	A/C	COMPUT EQUIP	WATER HEATER	OTHER	SPARE	SPACE	CONNECTED LOAD				
NO	DESCRIPTION	L	T	E	R	G	M	K	H	A	C	W	O	S	P	KVA	AMP	POLES	SWTCH	FUSE
1	TRANSFORMER (PANEL 'A')	43	0	6	19	0	2	17	4	0	0	0	2	4.8	0	93	112	3		
2	PANEL 'M'	0	0	0	0	0	13	0	75	199	0	0	0	6	6	287	345	3		
3	TRANSFORMER (PANEL 'S')	0	0	8	104	0	0	0	0	0	0	0	0	6	6	112	134	3		
																0	0			
																0	0			
																0	0			
																0	0			
																0	0			
																0	0			
																0	0			
	TOTAL CONNECTED LOADS:	43	0	14	123	0	15	17	78	199	0	0	2	17	12	492	591			

LOAD DESCRIPTION	C_KVA	N_S_LD	A_KVA	A_AMPS	C_WPSF	DIV	D_KVA	D_AMP	D_WPSF	FILE INFORMATION	SUMMARY
(L) LIGHTING	43	1.00	43	52	2.9	1.25	54	65	3.6	JOB NAME: ACC/ACT	3P. 4W. W/ GROUND BUS
(T) TASK LIGHTING	0	1.00	0	0	0.0	1.25	0	0	0.0	LOCATION: ADDISON	
(E) EXTERIOR LTG, SIGNS	14	1.00	14	16	0.9	1.25	17	20	1.1	SQUARE FT: 15000	VOLTAGE: 480Y/277
(R) RECEPTACLES	123	1.00	123	148	8.2	0.54	67	80	4.4	JOB NUMBER: 89016	BRACING: 50000 K AIC
(G) GROUPED MOTORS	0	1.00	0	0	0.0	1.00	0	0	0.0	DESIGN BY: WMS	MAINS: MLO
(M) SINGLE MOTORS	15	1.00	15	18	1.0	1.00	15	18	1.0	INPUT BY: WMS	AMPS: 800
(M) 25% LARGEST MOTOR	::::::	::::::	::::::	::::::	::::::	0.25	3	4	0.2	FILE NO: 9016CSB	
(K) KITCHEN EQUIPMENT	17	1.00	17	20	1.1	0.65	11	13	0.7		STATUS: NEW
(H) HEAT: 78 kVA	78	0.00	0	0	0.0	1.00	0	0	0.0		TYPE: -
(A) A/C EQUIP: 199 kVA	199	1.00	199	240	13.3	1.00	199	240	13.3		MOUNTED: SURFACE
(C) COMPUTER EQUIPMENT	0	1.00	0	0	0.0	1.00	0	0	0.0		LOCATED: CONF. CENTER E
(W) WATER HEATERS	0	1.00	0	0	0.0	1.00	0	0	0.0		SERVED FROM: 'MSB'
(O) OTHER	2	1.00	2	2	0.1	1.00	2	2	0.1		UPST. DEVICE: SWITCH
(S) SPARE: 17 kVA	::::::	::::::	::::::	::::::	::::::	0.50	8	10	0.6		
(P) SPACE: 12 kVA	::::::	::::::	::::::	::::::	::::::	0.50	6	7	0.4	PRINT HISTORY	ORIGINAL FORM: 6 Sep 88
										DATE: TIME:	LAST REVISION: 3 Aug 89
TOTALS:	492	::::::	413	497	27.6	::::::	383	460	25.5	08/16 14:13	FORM NUMBER: 9000SB03

COPYRIGHT (C) WILLIAM M. STEVENS AND BARRY L. MANN, P.E., 1988 ALL RIGHTS RESERVED

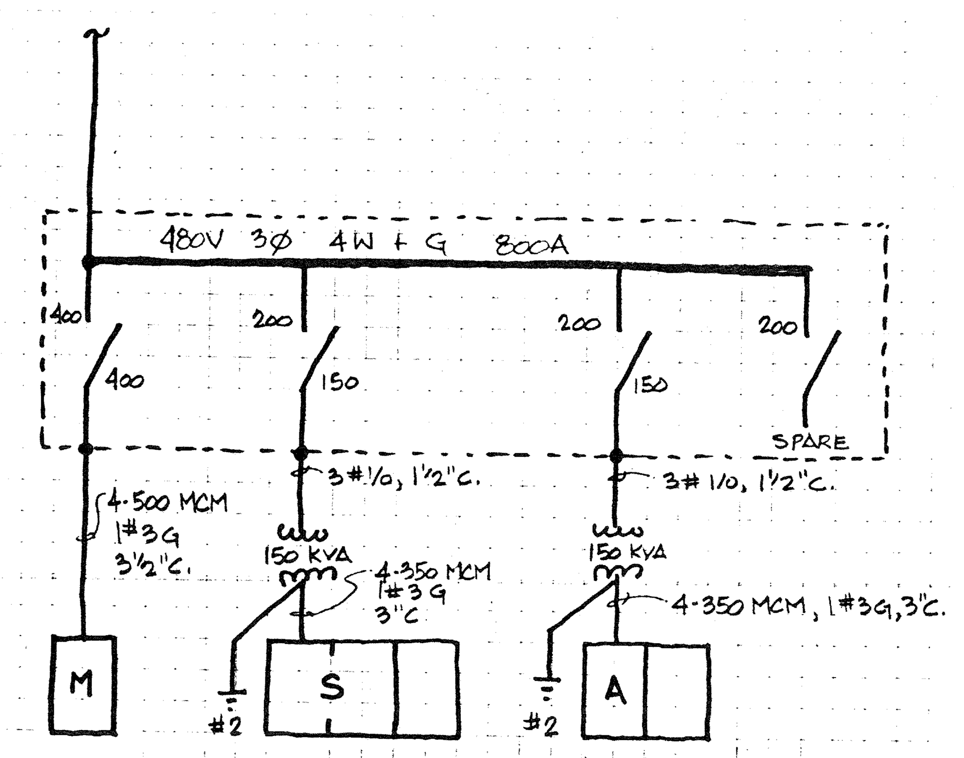

SWITCHBOARD 'CSB' ONE-LINE

PANEL 'TDP' SCHEDULE		(L)IGHTING			RECPT	(M)OTORS		KITCHN	HEAT	A/C	COMPUT EQUIP	WATER HEATER	OTHER	SPARE	SPACE	CONNECTED LOAD				
NO	DESCRIPTION	L	T	E	R	G	M	K	H	A	C	W	O	S	P	KVA	AMP	POLES	SWTCH	FUSE
1	AHU - 7						1		15							16	45	2	100	100
2	AHU - 8						1		15							16	45	2	100	100
3	AHU - 9						1		15							16	45	2	100	100
4	PANEL '1A'	23	0	8	12	0	5	0	0	0	0	0	2	9	5	50	138	3	400	250
5	PANEL 'TS'	0	0	0	0	0	24	0	0	0	0	0	39	0	8	62	173	3	-	-
6	100 A IEC RECEPTACLE												25			25	69	3	100	100
7	PANEL '1B'	29	0	12	19	0	2	15	0		6		4	1	1.8	86	238	3	400	300
8																0	0			
9																0	0			
10																0	0			
	TOTAL CONNECTED LOADS:	52	0	19	32	0	34	15	45	0	6	0	69	10	15	272	754			

LOAD DESCRIPTION	C_KVA	N_S_LD	A_KVA	A_AMPS	C_WPSF	DIV	D_KVA	D_AMP	D_WPSF	FILE INFORMATION	SUMMARY
(L) LIGHTING	52	1.00	52.27	145	1.7	1.25	65	181	2.2	JOB NAME: ACC/ACT	3P. 4W. W/ GROUND BUS
(T) TASK LIGHTING	0	1.00	0	0	0.0	1.25	0	0	0.0	LOCATION: ADDISON	
(E) EXTERIOR LTG, SIGNS	19	1.00	19.08	53	0.6	1.25	24	66	0.8	SQUARE FT: 30000	VOLTAGE: 208Y/120
(R) RECEPTACLES	32	1.00	31.8	88	1.1	0.66	21	58	0.7	JOB NUMBER: 90016	BRACING: 50 K AIC
(G) GROUPED MOTORS	0	1.00	0	0	0.0	1.00	0	0	0.0	DESIGN BY: WMS	MAINS: MSW
(M) SINGLE MOTORS	34	1.00	33.86	94	1.1	1.00	34	94	1.1	INPUT BY: MSS	AMPS: 900
(M) 25% LARGEST MOTOR	::::::	::::::	::::::	::::::	::::::	0.25	6	16	0.2	FILE NO: 0016TDP	
(K) KITCHEN EQUIPMENT	15	1.00	14.85	41	0.5	0.65	10	27	0.3		STATUS: NEW
(H) HEAT: 45 kVA	45	1.00	45.3	126	1.5	1.00	45	126	1.5		TYPE: QMR
(A) A/C EQUIP: 0 kVA	0	1.00	0	0	0.0	1.00	0	0	0.0		MOUNTED: SURFACE
(C) COMPUTER EQUIPMENT	6	1.00	5.7	16	0.2	1.00	6	16	0.2		LOCATED: ELECTRIC ROOM
(W) WATER HEATERS	0	1.00	0	0	0.0	1.00	0	0	0.0		SERVED FROM: SWITCHBOARD 'M'
(O) OTHER	69	1.00	68.8	191	2.3	1.00	69	191	2.3		UPST. DEVICE: TRANSFORMER
(S) SPARE: 10 kVA	::::::	::::::	::::::	::::::	::::::	1.00	10	28	0.3		
(P) SPACE: 15 kVA	::::::	::::::	::::::	::::::	::::::	1.00	15	42	0.5	PRINT HISTORY	ORIGINAL FORM: 6 Sep 88
										DATE: TIME:	LAST REVISION: 3 Aug 89
TOTALS:	272	::::::	272	754	0.0	::::::	305	845	10	08/16 14:13	FORM NUMBER: 9000SB03

COPYRIGHT (C) WILLIAM M. STEVENS AND BARRY L. MANN, P.E., 1988 ALL RIGHTS RESERVED

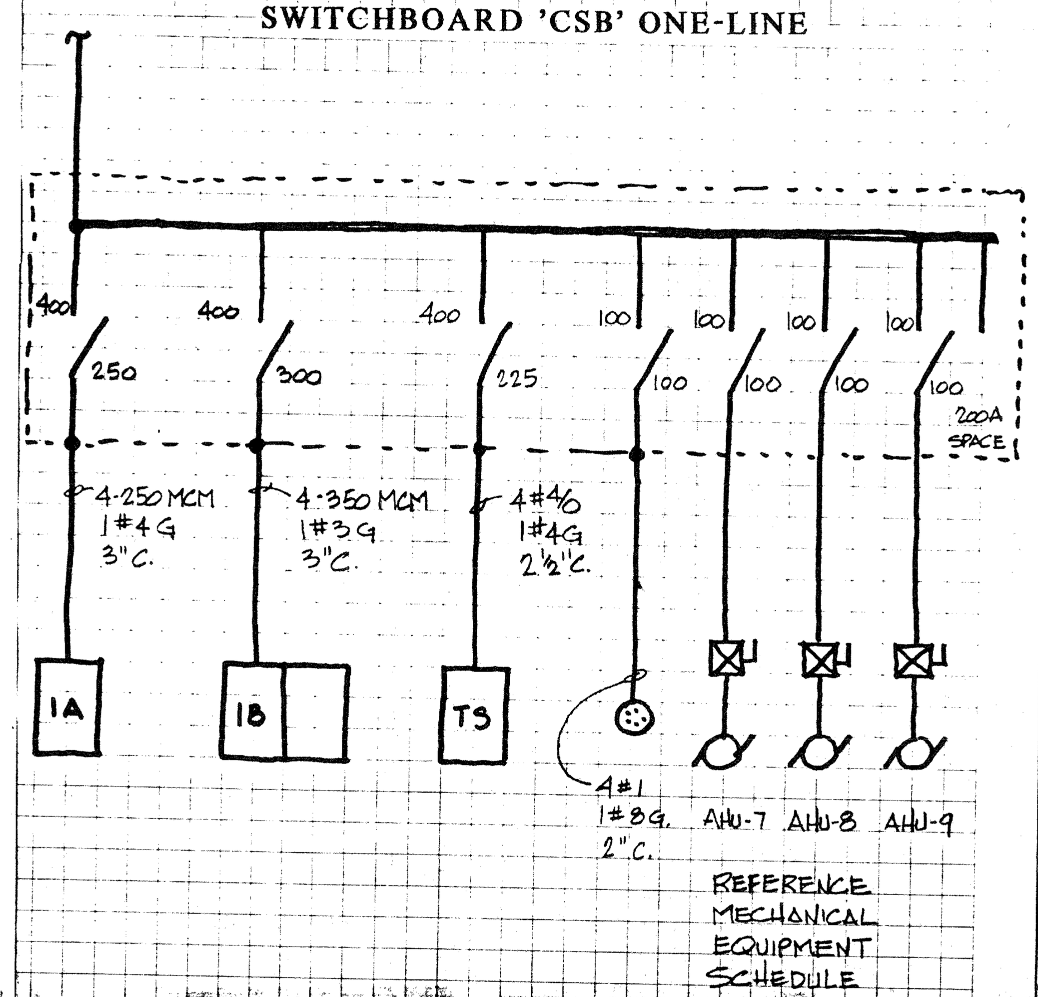

PANEL 'TDP' ONE-LINE

MECHANICAL EQUIPMENT SCHEDULE

PLAN MARK	EQUIPMENT DESCRIPTION /CATALOG NO.	LOCATION	VOLTS	PHASE	HP	RLA/FLA	KW HEAT	CALC MCA	MANUF. REC. MCA	STARTER BY	STARTER SIZE	DISCONNECT BY	DISCONNECT SIZE	MAX OCPD BRKR	MAX OCPD FUSE	SERVED FROM	WIRES	C
RTU-1	TRANE/SFHB-25	1st ROOF CONF CENT	460	3		57		60.9		M		E	100		70	M-2/4/6	3#4, 1#8 G	1 1/4
	MOTOR				10	14												
	EXH FAN					3												
	EXH FAN					3												
	COND FAN (3)					3												
	COMP RLA					12												
	COMP RLA					12												
	COMP RLA					12												
RTU-2	TRANE/SFHB-25	1st ROOF CONF CENT	460	3		57		60.9		M		E	100		70	M-8/10/12	3#4, 1#8 G	1 1/4
	MOTOR				10	14												
	EXH FAN					3												
	EXH FAN					3												
	COND FAN (3)					3												
	COMPRESSOR					12												
	COMPRESSOR					12												
	COMPRESSOR					12												
RTU-3	TRANE/BYC100	1st ROOF CONF CENT	460	3		19		22.2	26	M		E	60		35	M-14/16/18	3#10, 1#10G	3/4
	MOTOR			3	2	3												
	COND FAN			1		1												
	COMPRESSOR			3	7.5	14												
RTU-4	TRANE/BYC100	1st ROOF CONF CENT	460	3		19		22.2	26	M		E	60		35	M-20/22/24	3#10, 1#10G	3/4
	MOTOR			3	2	3												
	COND FAN			1		1												
	COMPRESSOR			3	7.5	14												
RTU-5	TRANE/YCD075	1st ROOF CONF CENT	460	3		17		20.3	21	M		E	60		30	M-26/28/30	3#10, 1#10G	3/4
	MOTOR			3	0.75	2												
	COND FAN			1	0.5	2												
	COMPRESSOR			3		13												
RTU-6	TRANE/BYC130	1st ROOF CONF CENT	460	3		30		32.6	33	M		E	60		40	M-32/34/36	3#8, 1#10G	1
	MOTOR			3	3	4.2												
	COND FAN			1	0.5	2												
	COND FAN			1	0.5	2												
	COND FAN			1		2												
	COMPRESSOR			3	5	10												
	COMPRESSOR			3	5	10												
RTU-7	TRANE/SFHC-40	1st ROOF NORTHWEST	460	3		182		190.7		M		E	200		200		3#3/0, 1#6G	2
	MOTOR				20	27												
	MOTOR				20	27												
	EXHAUST FAN				10	14												
	EXHAUST FAN				10	14												
	COND FAN			3	1	7												
	COND FAN			3	1	7												
	COND FAN			3	1	7												
	COND FAN			3	1	7												
	COMPRESSOR					36												
	COMPRESSOR					36												
RTU-8	TRANE/SFHC-50	1st ROOF NORTHWEST	460	3		227		237.3		M		E	400		250		3#250 m, 1#4G	2+
	MOTOR				25	34												
	MOTOR				25	34												
	EXHAUST FAN				15	21												
	EXHAUST FAN				15	21												
	COND FAN			3	1	11												
	COND FAN			3	1	11												
	COND FAN			3	1	11												
	COND FAN			3	1	11												
	COND FAN			3	1	11												
	COND FAN			3	1	11												
	COMPRESSOR					43												
	COMPRESSOR					43												
RTU-9	TRANE/BYC200	BOX OFFICE	460	3		34		36.6		M		E	60		40	1M-2/4/6	3#8, 1#10G	1
	MOTOR			3	5	6												
	MOTOR			3	5	6												
	COND FAN			1	1	2												
	COND FAN			1	1	2												
	COND FAN			1	1	2												
	COMPRESSOR				7.5	11												
	COMPRESSOR				7.5	11												
RTU-11	TRANE/YCD060A	1st ROOF EAST	460	3		15		17.6		M		E	30		25	2M-2/4/6	3#10, 1#10G	3/4
	MOTOR			1	0.6	3												
	COND FAN			1		1												
	COMPRESSOR			3		11												
RTU-12	TRANE/YCD060A	1st ROOF EAST	460	3		15		17.6		M		E	30		25	2M-8/10/12	3#10, 1#10G	3/4
	MOTOR			1	0.6	3												
	COND FAN			1		1												
	COMPRESSOR			3		11												
RTU-13	TRANE/YCD060A	1st ROOF EAST	460	3		15		17.6		M		E	30		25	2M-14/16/18	3#10, 1#10G	3/4
	MOTOR			1	0.6	3												
	COND FAN			1		1												
	COMPRESSOR			3		11												
RTU-14	TRANE/YCD060A	1st ROOF EAST	460	3		15		17.6		M		E	30		25	2M-20/22/24	3#10, 1#10G	3/4
	MOTOR			1	0.6	3												
	COND FAN			1		1												
	COMPRESSOR			3		11												
RTU-16	TRANE/YCD048A	1st ROOF NORTHWEST	460	3		11		13.1		M		E	30		15	1M-8/10/12	3#12, 1#12G	1/2
	MOTOR				0.5	2												
	COND FAN			1	0.33	1												
	COMPRESSOR			3		8												
RTU-17	TRANE/YCD075A	1st ROOF NORTHWEST	460	3		17		20.3	21	M		E	60		30	1M-14/16/18	3#10, 1#10G	3/4
	MOTOR			3	0.75	2												
	COND FAN			1	0.5	2												
	COMPRESSOR			3		13												
RTU-18	TRANE/YCD120	1st ROOF NORTHWEST	460	3		24		29.1		M		E	60		40	1M-20/22/24	3#8, 1#10G	1
	MOTOR			3	2	3												
	COND FAN			1	1	3												
	COMPRESSOR					9												
	COMPRESSOR					9												
RTU-19	TRANE/YCD036A	1st ROOF NORTHWEST	460	3		8		9.7		M		E	30		15	1M-26/28/30	3#12, 1#12G	1/2
	MOTOR			1	0.33	1												
	COND FAN			1	0.28	1												
	COMPRESSOR			3		6												
RTU-20	TRANE/YCD048A	1st ROOF NORTHWEST	460	3		11		13.1		M		E	30		15	1M-32/34/36	3#12, 1#12G	1/2
	MOTOR				0.5	2												
	COND FAN			1	0.33	1												
	COMPRESSOR			3		8												
RTU-21	TRANE/YCD075A		460	3		17		20.3	21	M		E	60		30	1M-38/40/42	3#10, 1#10G	3/4
	MOTOR			3	0.75	2												
	COND FAN			1	0.5	2												
	COMPRESSOR			3		13												
RTU-22	TRANE/YCC030A	RECEP.	208-230	1		20		23.2		M		E	60		35		2#10, 1#10G	3/4
	MOTOR			1	0.25	3												
	COND FAN			1	0.25	2												
	COMPRESSOR			1	2.5	15												
RTU-23	TRANE/YCD060A	COMMUNITTE EAST	208	3		28		32.9		M		E	60		50		3#6, 1#10G	1
	MOTOR			1	0.6	5												
	COND FAN			1		3												
	COMPRESSOR			3		20												
RTU-24	TRANE/YCD060A	COMMUNITTE EAST	208	3		28		32.9		M		E	60		50		3#6, 1#10G	1
	MOTOR			1	0.6	5												
	COND FAN			1		3												
	COMPRESSOR			3		20												
RTU-25	TRANE/YCD060A	COMMUNITTE EAST	208	3		28		32.9		M		E	60		50		3#6, 1#10G	1
	MOTOR			1	0.6	5												
	COND FAN			1		3												
	COMPRESSOR			3		20												
AHU-1	W/HEATING	CONF CENT	480	3	2	8	24.92	42		E		E	60		45	M-19/21/23	3#6, 1#10G	1
CU-1	TTA090A	CONF CENT				14		18				E	30		30	M-1/3/5	3#10, 1#10G	3/4
	COMPRESSOR		480	3		13												
	COND FAN		480	1		1												
AHU-2	W/HEATING	CONF CENT	480	3	2	8	24.92	42		E		E	60		45	M-25/27/29	3#6, 1#10G	1
CU-2	TTA090A	CONF CENT				14		18				E	30		30	M-7/9/11	3#10, 1#10G	3/4
	COMPRESSOR		480	3		13												
	COND FAN		480	1		1												
AHU-3	W/HEATING	CONF CENT	480	3	1.5	3	24.92	41		E		E	60		45	M-31/33/35	3#6, 1#10G	1
CU-3	TTA090A	CONF CENT				14		18				E	30		30	M-13/15/17	3#10, 1#10G	3/4
	COMPRESSOR		480	3		13												
	COND FAN		480	1		1												
AHU-4	W/HEATING	CONF CENT	208	1	0.25	1	3.6	17		E	M	E	20		20	A-77/79	2#12, 1#12G	3/4
CU-4	TTD712	CONF CENT				7		9				E	30		15	A-81/83	3#12, 1#12G	1/2
	COMPRESSOR		208	1		6												
	COND FAN		208	1		1												
AHU-5	W/HEATING	SHOP	480	3	1.5	3	24.92	41		E		E	60		45	1M-1/3/5	3#6, 1#10G	1
CU-5	TTA090A	1st ROOF NORTHWEST				14		18				E	30		30	1M-7/9/11	3#10, 1#10G	3/4
	COMPRESSOR		480	3		13												
	COND FAN		480	1		1												
AHU-6	W/HEATING	DIMMER ROOM	480	3	1.5	3	24.92	41		E		E	60		45	2M-1/3/5	3#6, 1#10G	1
CU-6	TTA090A	LEVEL 1 NW				14		18				E	30		30	1M-19/21/23	3#10, 1#10G	3/4
	COMPRESSOR		480	3		13												
	COND FAN		480	1		1												
AHU-7	W/HEATING	BOX OFFICE 1st FLOOR	208	1	0.75	6	15	97		E		E	100		100		3#1, 1#8G	1 1/4
CU-7	TTA072	BOX OFFICE ROOF				12		14.3				E	30		20	1M-25/27/29	3#12, 1#12G	1/2
	COMPRESSOR		480	3		10												
	COND FAN		480	1		2												
AHU-8	W/HEATING	BOX OFFICE 1st FLOOR	208	1	0.75	6	15	97		E		E	100		100		3#1, 1#8G	1 1/2
CU-8	TTA072	BOX OFFICE ROOF				12		14.3				E	30		20	1M-31/33/35	3#12, 1#12G	1/2
	COMPRESSOR		480	3		10												
	COND FAN		480	1		2												
AHU-9	W/HEATING	BOX OFFICE 2nd FLOOR	208	1	0.75	6	15	97		E		E	100		100		3#1, 1#8G	1 1/2
CU-9	TTA072	BOX OFFICE ROOF				12		14.3				E	30		20	1M-37/39/41	3#12, 1#12G	1/2
	COMPRESSOR		480	3		10												
	COND FAN		480	1		2												
EF-1	ACME/P135D3	CONF CENT	120	1	0.17	4		6		E	M	E	20	15			2#12, 1#12G	1/2
EF-2	ACME/V150	CONF CENT	120	1		1		2		E	M	E	20	15			2#12, 1#12G	1/2
EF-3	ACME/PWB200D	2 F NW	120	1	0.17	4		6		E	M	E	20	15			2#12, 1#12G	1/2
EF-4	ACME/PWB200D	2 F NW	120	1	0.17	4		6		E	M	E	20	15			2#12, 1#12G	1/2
EF-5	ACME/V150	1 F NW	120	1		1		2		E	M	E	20	15			2#12, 1#12G	1/2
EF-6	ACME/V150	1 F NW	120	1		1		2		E	M	E	20	15			2#12, 1#12G	1/2
EF-7	ACME/V150	1 F NW	120	1		1		2		E	M	E	20	15			2#12, 1#12G	1/2
EF-8	ACME/V150	1 F NW	120	1		1		2		E	M	E	20	15			2#12, 1#12G	1/2
EF-9	ACME/V150	1 F NW	120	1		1		2		E	M	E	20	15			2#12, 1#12G	1/2
EF-10	ACME/V150	1 F NW	120	1		1		2		E	M	E	20	15			2#12, 1#12G	1/2
EF-11	ACME/V150	1 F NW	120	1		1		2		E	M	E	20	15			2#12, 1#12G	1/2
EF-12	ACME/V150	1 F NW	120	1		2		4		E	M	E	20	15			2#12, 1#12G	1/2
EF-13	ACME/V200	CONF CENT	120	1		1		2		E	M	E	20	15			2#12, 1#12G	1/2
EF-14	ACME/PW110-2	1 F NW	120	1	0.09	2		4		E	M	E	20	15			2#12, 1#12G	1/2
WH-1	10 GAL STATE PV-17-10MS-K	1st FLOOR CONF CENT	120	1		14	1.65	17				E	20	20		A-80	2#12, 1#12G	1/2
WH-2	47 GAL STATE CV-50-2SLS	1st FLOOR CONF CENT	208	1		20	4.8	25				E	30	30		A-82/84	2#10, 1#10G	3/4
WH-3	6 GAL STATE PV-6-1MS-K	1st FLOOR NORTHWEST	120	1		14	1.65	17				E	20	20			2#12, 1#12G	1/2
WH-4	100 GAL STATE SBT-100-199-NET	2nd FLOOR NORTHWEST	120	1		1								15			2#12, 1#12G	1/2
WH-5	6 GAL STATE PV-6-1MS-K	1st FLOOR NORTHWEST	120	1		14	1.65	17				E	20	20			2#12, 1#12G	1/2

JOB NAME: ACC/ACT JOB NO: 90016 MECH. ENGR: DG ELEC. ENGR: WMS DATE: 16-Aug-90 01:49:40 AM

STATE OF TEXAS MARK BRIAN PORTNOY 45308 REGISTERED PROFESSIONAL ENGINEER

ACC · ACT
ADDISON

OWNER: Town of Addison
ARCHITECT: Cunningham Architects, 2700 Fairmount, Dallas, Texas 75201, 214-855-5272
LANDSCAPE: The Kellams Group, 312-776-1417
THEATRE CONSULTANT: Theatre Projects, 203-431-3949
INTERIORS: CRSS, 713-552-2000
STRUCTURAL: Ellisor Tanner, 214-387-8333
M.E.P.: MEP Systems, 214-754-4749
CIVIL: Kurtz & Associates, 214-690-3322
HISTORIAN: Alan Mason, 214-691-7182
LIGHTING: Pamela Hull Wilson, 214-823-6542
GRAPHICS: Nottestad Design, 214-954-1978

ELECTRICAL SCHEDULES

ISSUE FOR BID 8-17-90

8 1 3