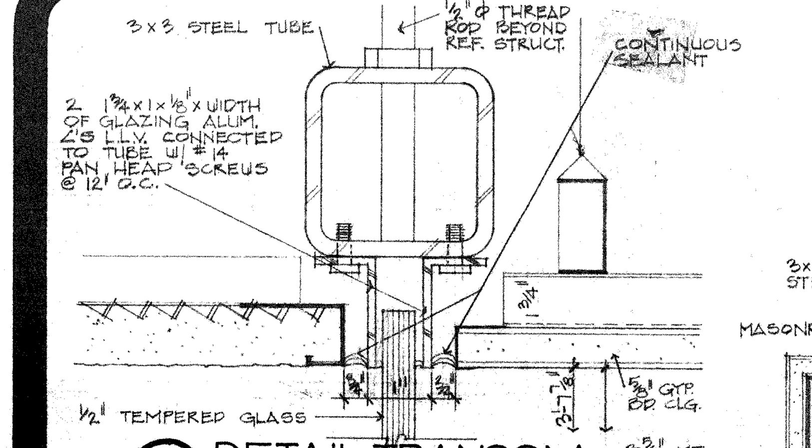

501 DETAIL: TRANSOM
SCALE 1/2"=1" REF. 406

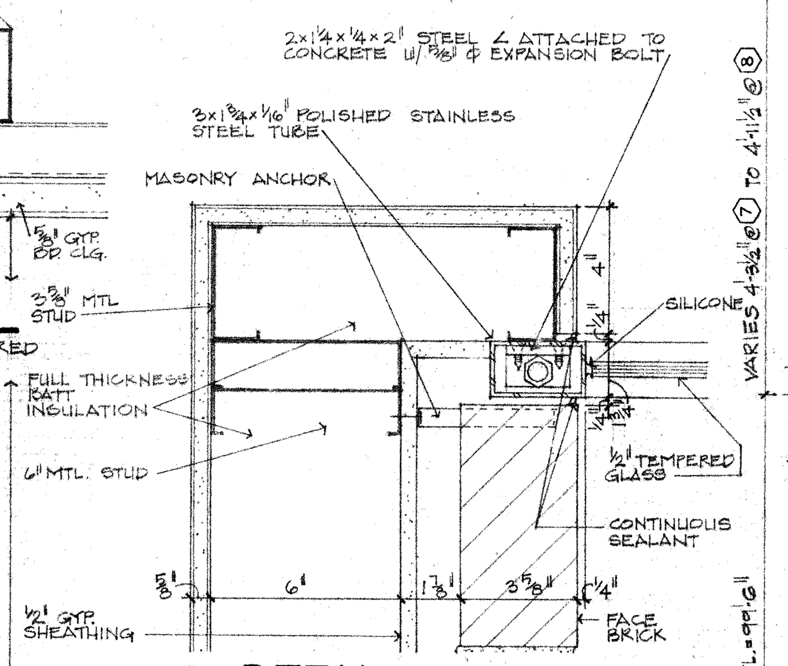

502 DETAIL: JAMB
SCALE 3"=1'-0" REF. 406

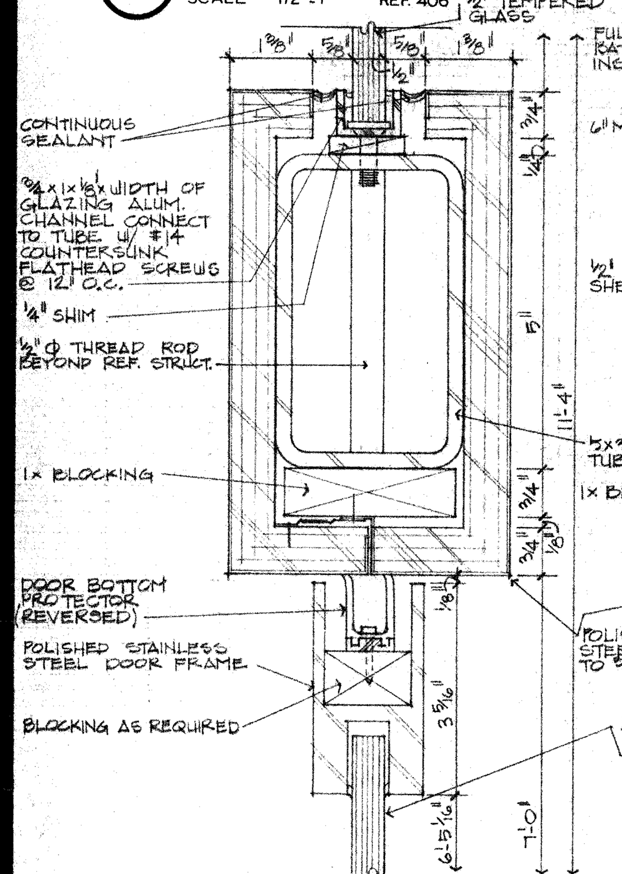

503 DETAIL: HEAD
SCALE 1/2"=1" REF. 406

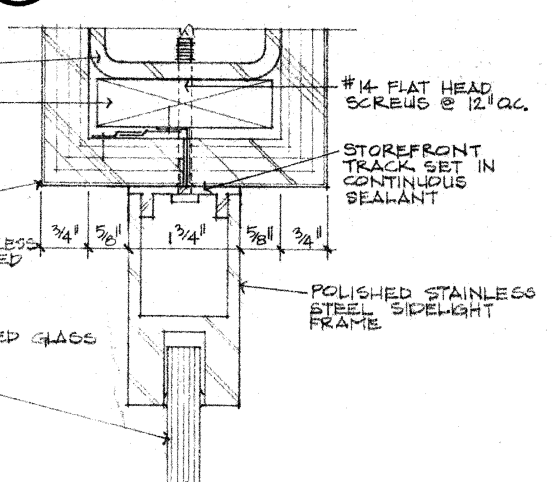

504 DETAIL: HEAD
SCALE 1/2"=1" REF. 406

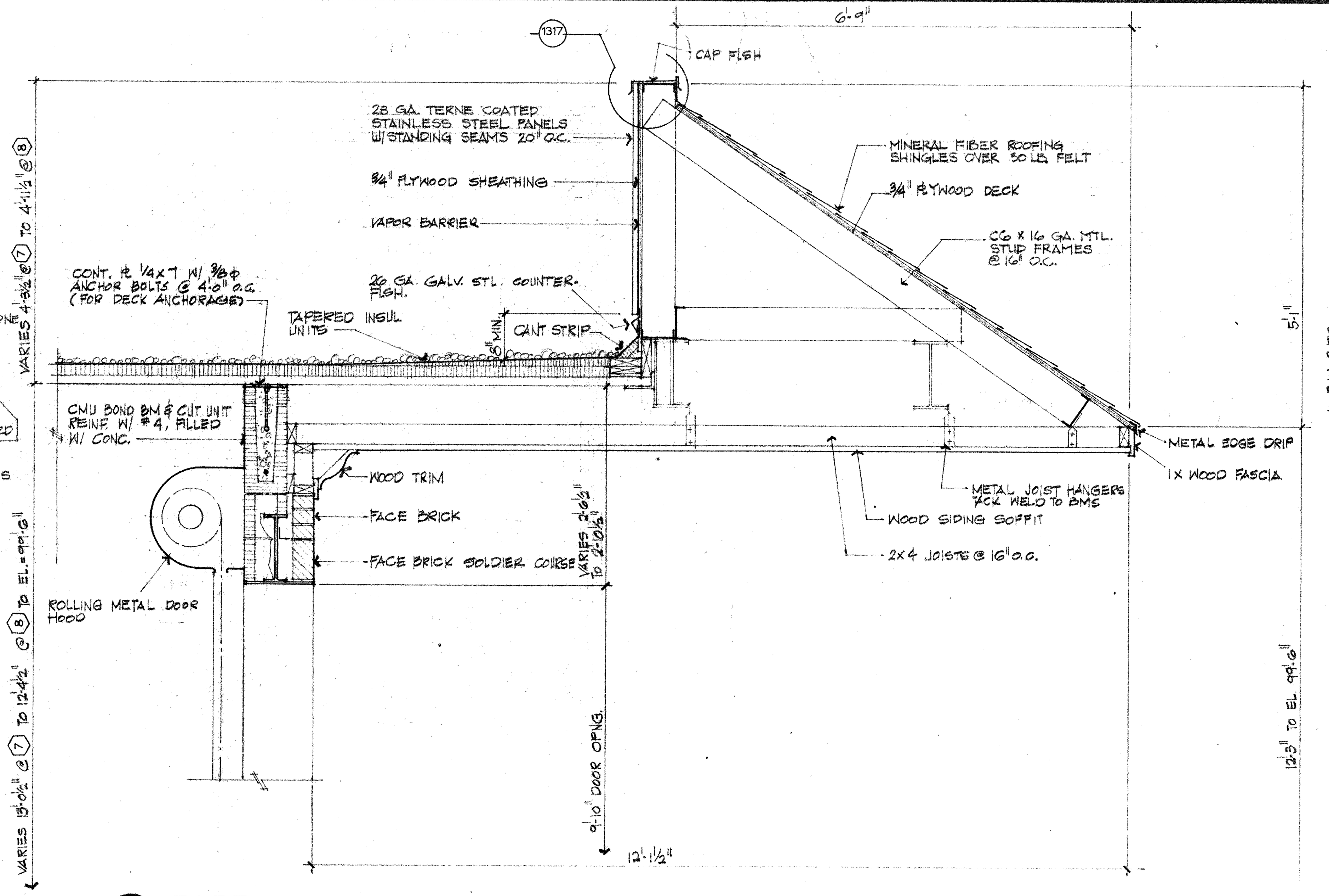

505 PARTIAL WALL SECTION
SCALE 3/4"=1'-0" REF. 201

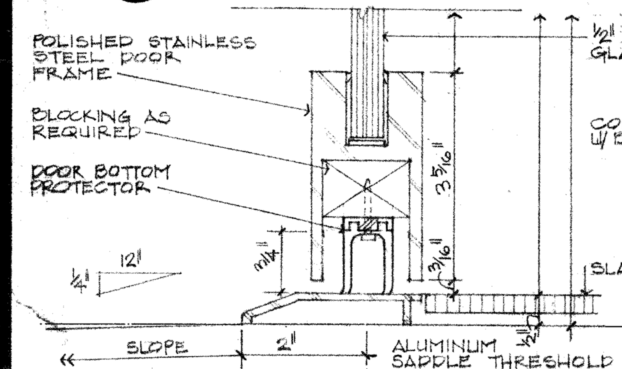

506 DETAIL: SILL
SCALE 1/2"=1" REF. 406

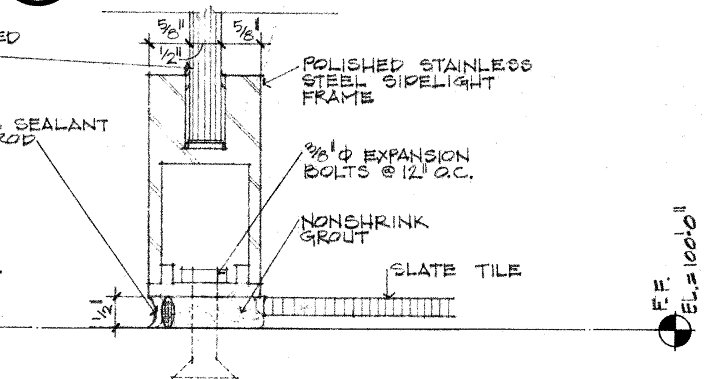

507 DETAIL: SILL
SCALE 1/2"=1" REF. 406

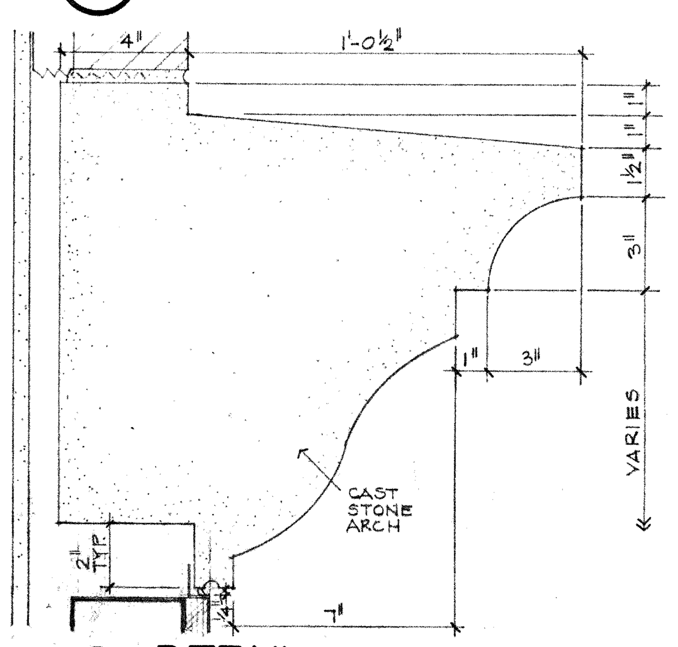

508 DETAIL
SCALE 3"=1'-0" REF. 406

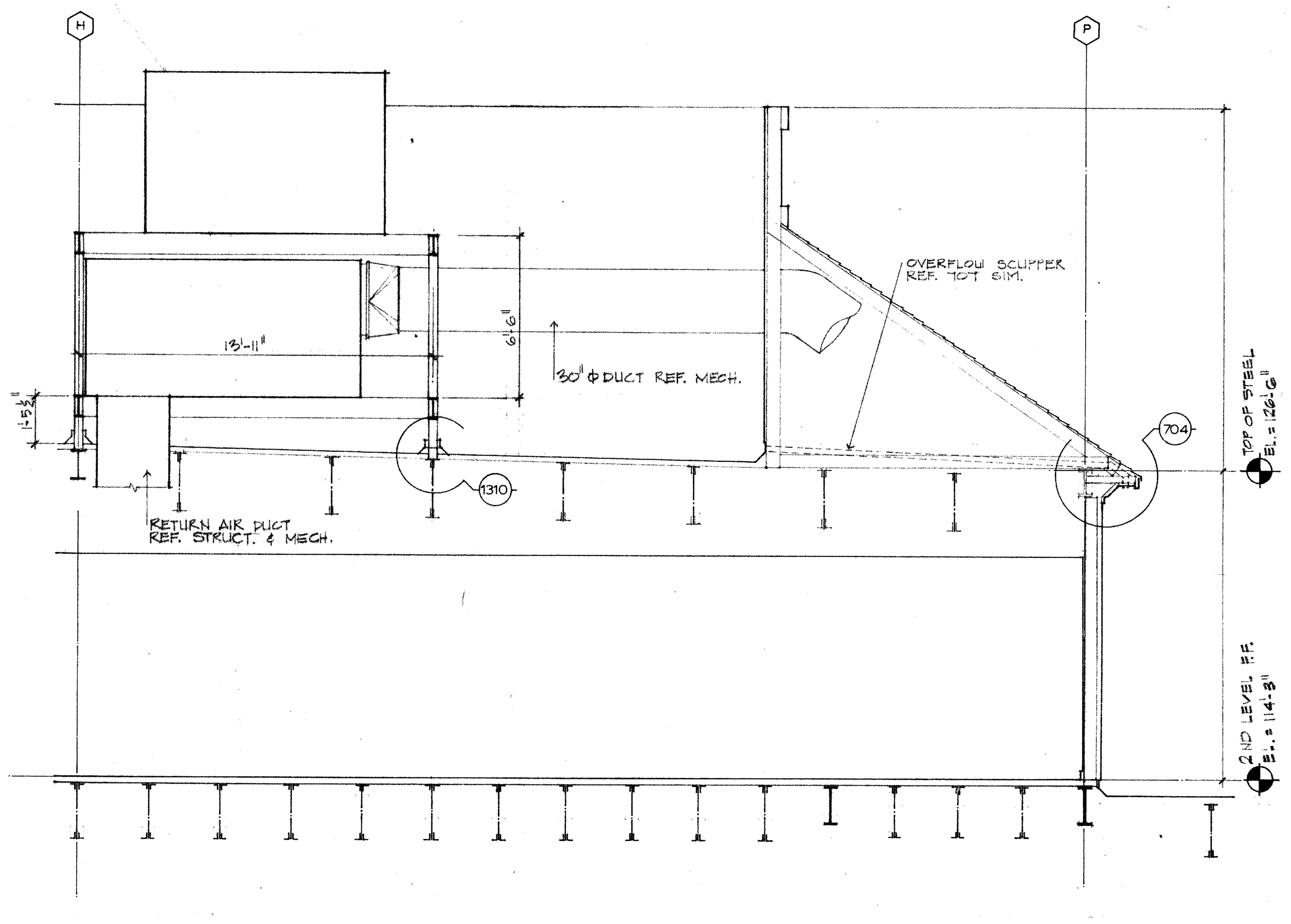

509 PARTIAL BUILDING SECTION
SCALE 1/4"=1'-0" REF. 510

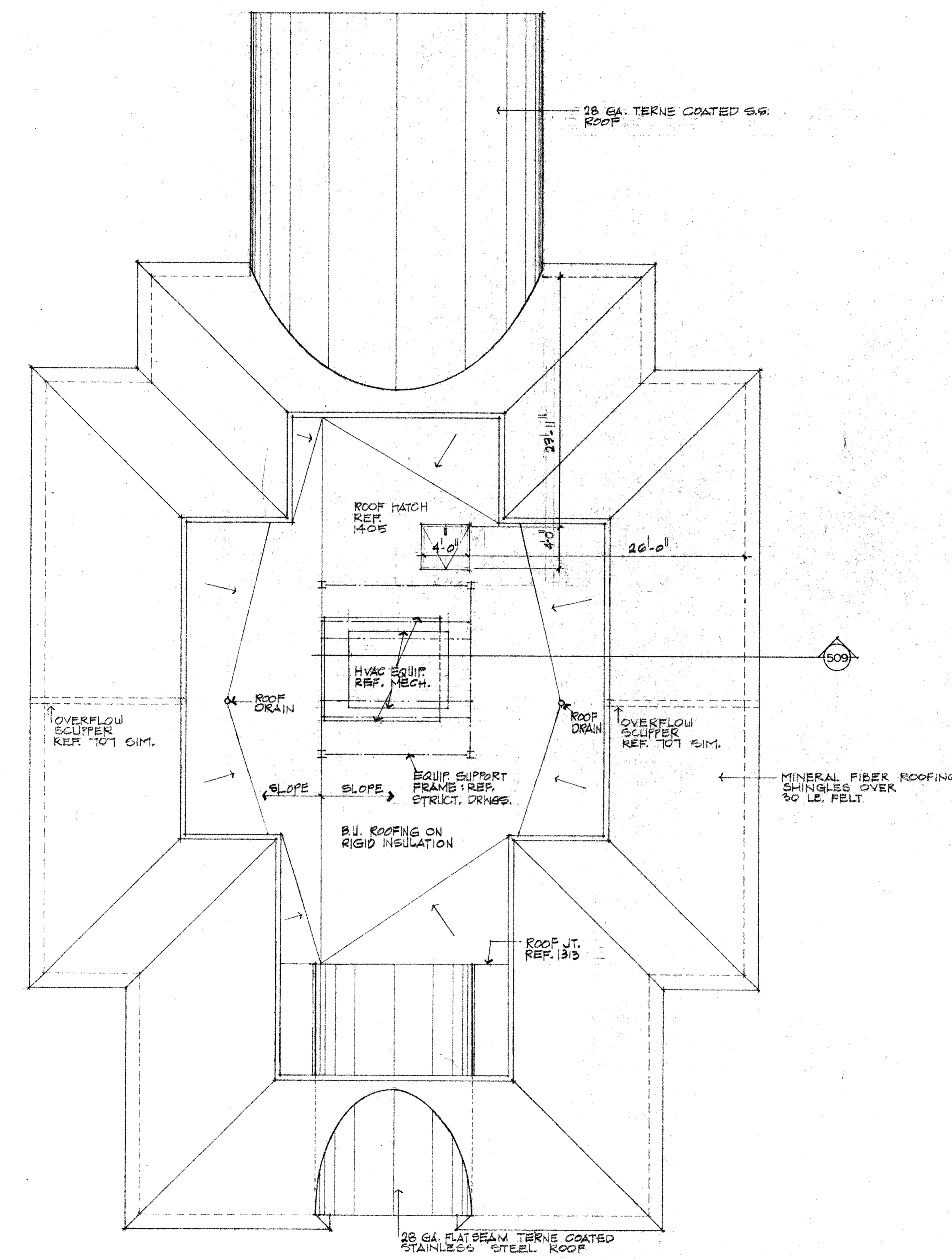

510 SECOND LEVEL ROOF PLAN
SCALE 1/8"=1'-0"

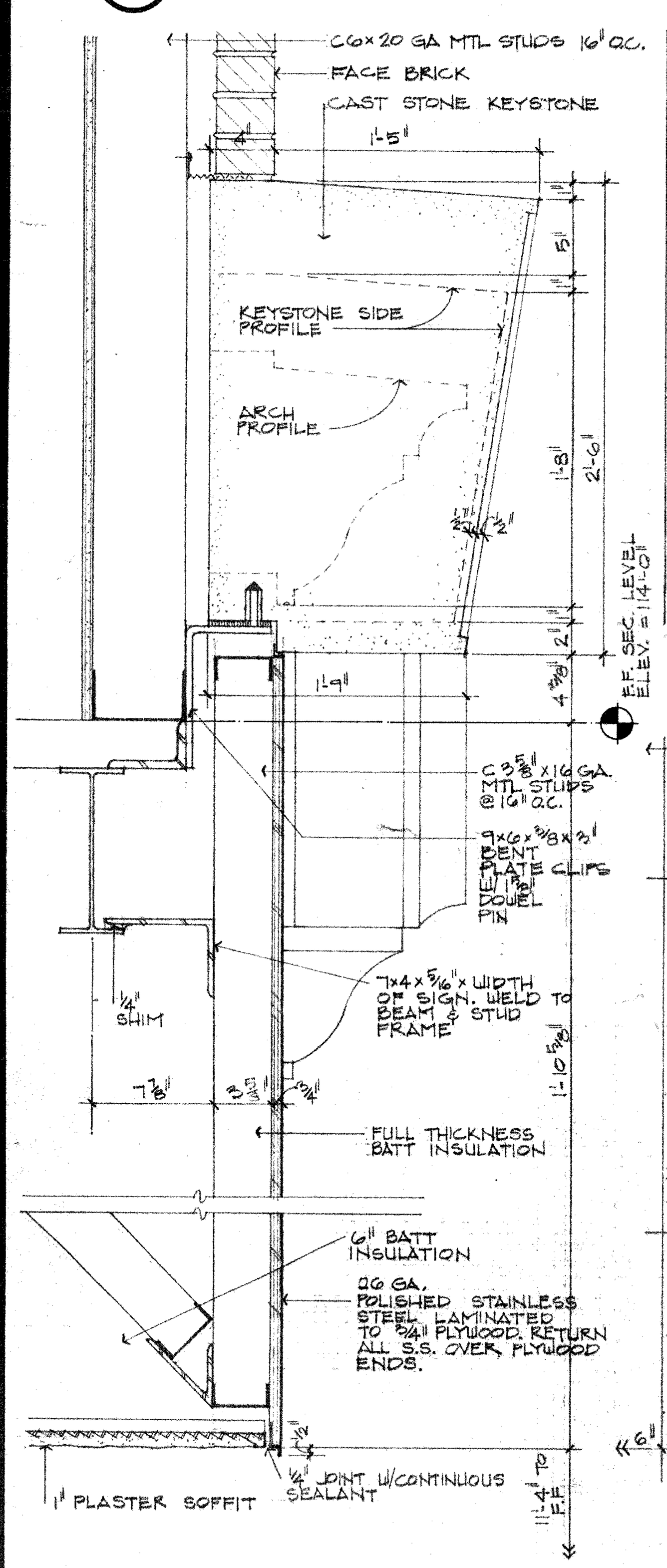

511 DETAIL @ ENTRY
SCALE 1 1/2"=1'-0" REF. 406

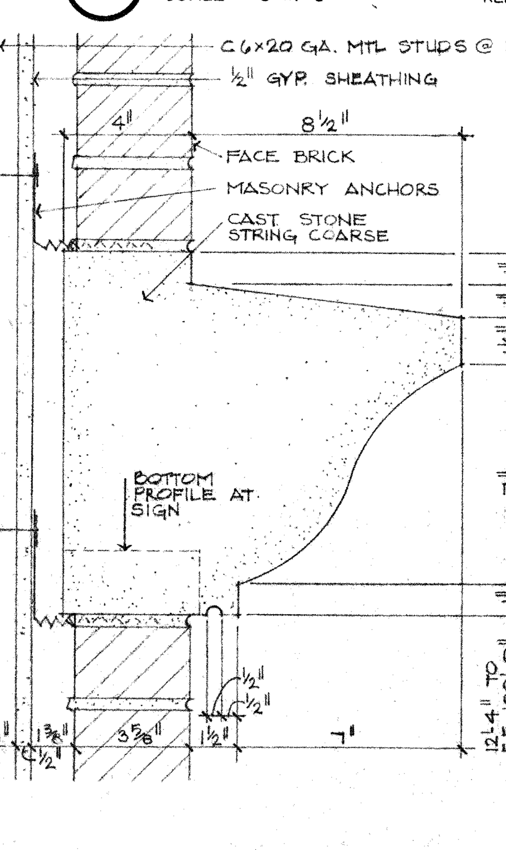

512 DETAIL
SCALE 3"=1'-0" REF. 406

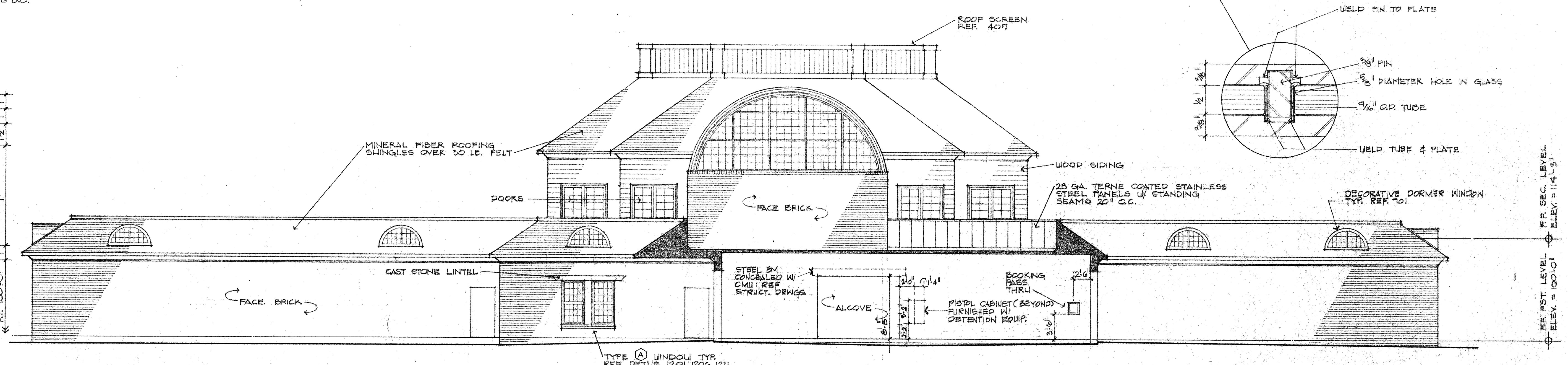

513 NORTH ELEVATION & SECTION THRU SALLY PORT
SCALE 1/8"=1'-0"

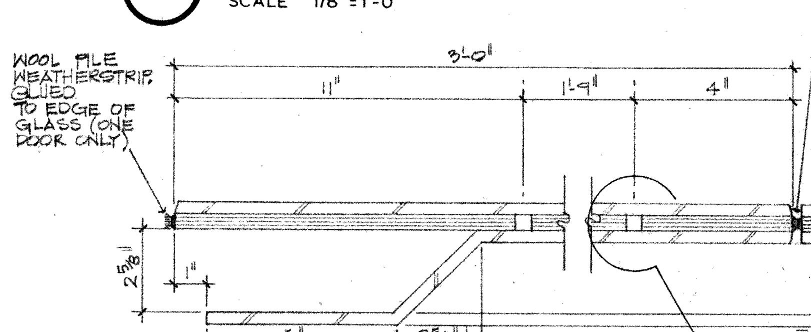

514 DOOR PUSH/PULL
SCALE 3"=1'-0" REF. 406

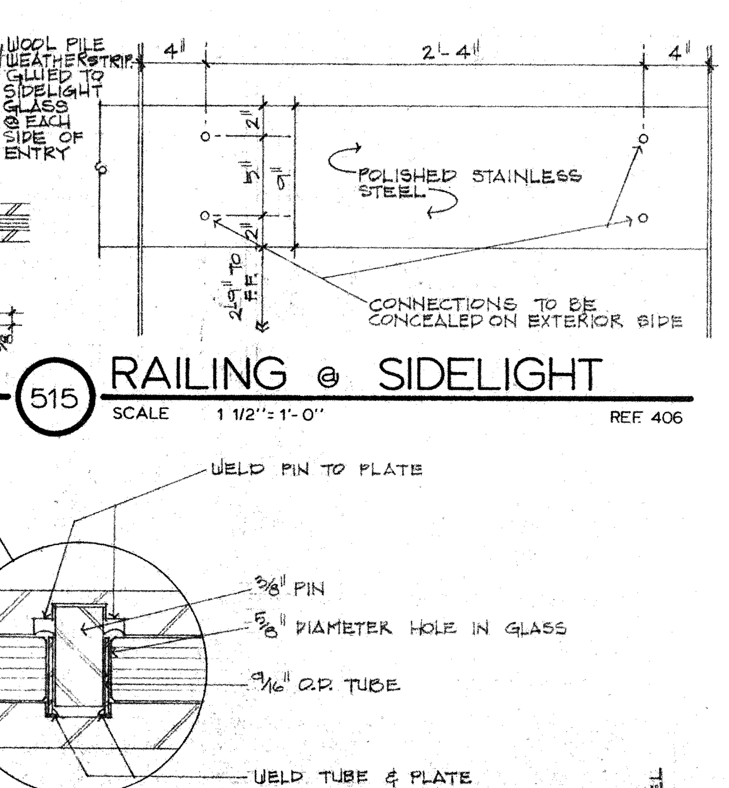

515 RAILING @ SIDELIGHT
SCALE 1 1/2"=1'-0" REF. 406

SHEPHERD + BOYD
ARCHITECTS/PLANNERS & INTERIORS
8235 DOUGLAS AVENUE
DOUGLAS BUILDING SUITE 900
DALLAS TEXAS 75225
TELEPHONE 214/691-9000

A NEW POLICE FACILITY FOR THE
TOWN OF ADDISON
4799 AIRPORT PARKWAY
ADDISON, TEXAS 75248

REGISTERED ARCHITECT STATE OF TEXAS

REVISIONS

DATE
JULY 12 1982

JOB NO. 318

SHEET
A5

N09095