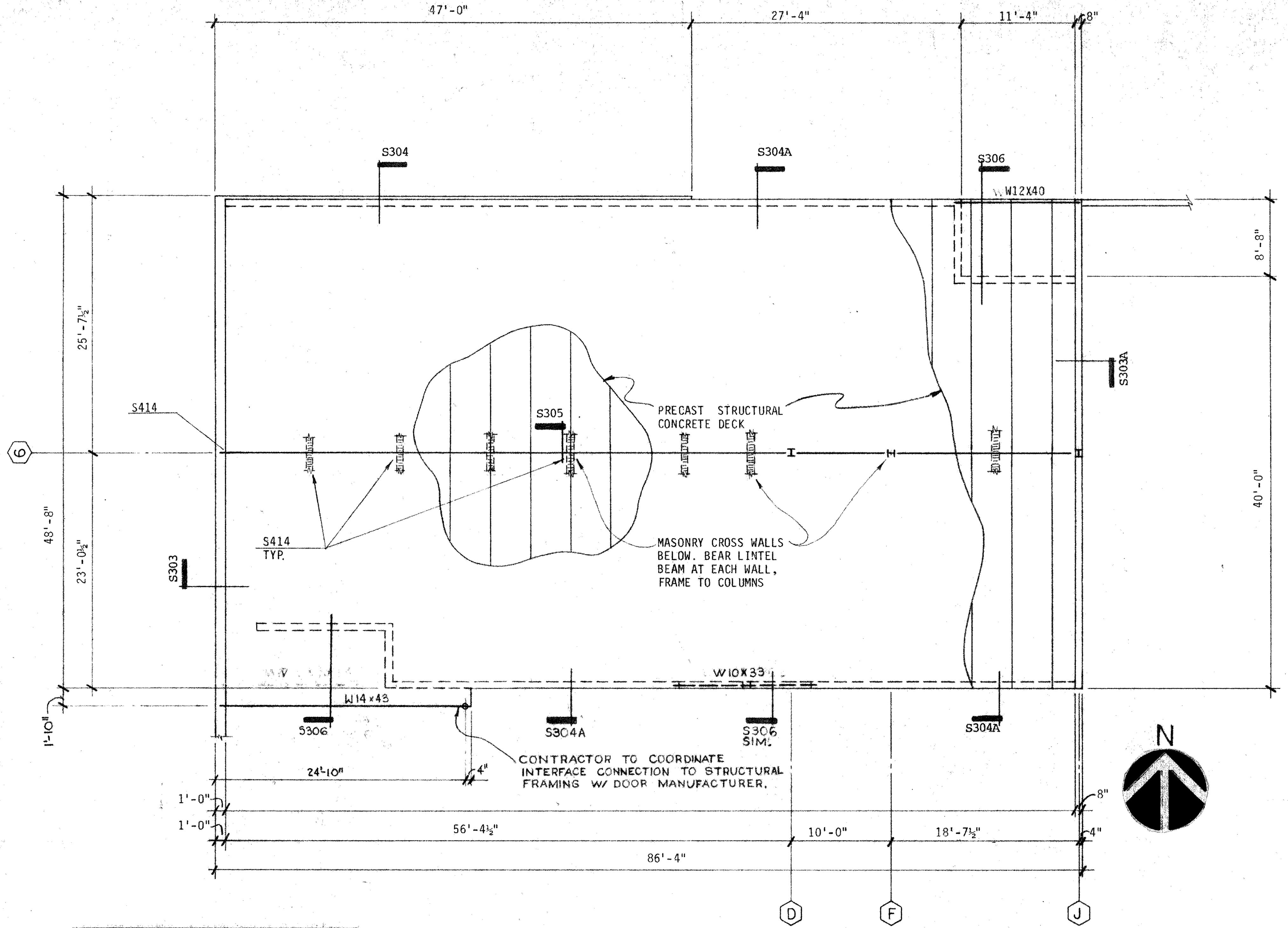

NOTE:
PRECAST PENETRATIONS NOT SHOWN SHALL BE COORDINATED WITH THE ARCHITECT.

S301 SECURITY ROOF AT JAIL
1/8"=1'-0"

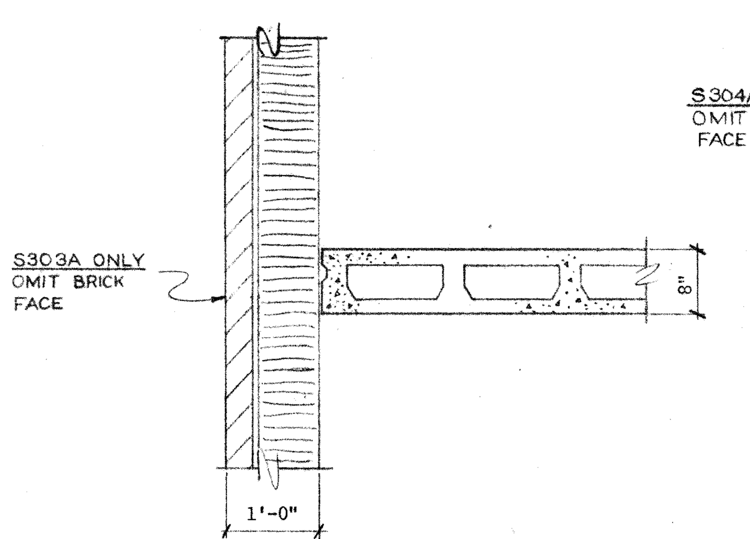

S303 S303A SECTION
3/4"=1'-0" TYP. UNO

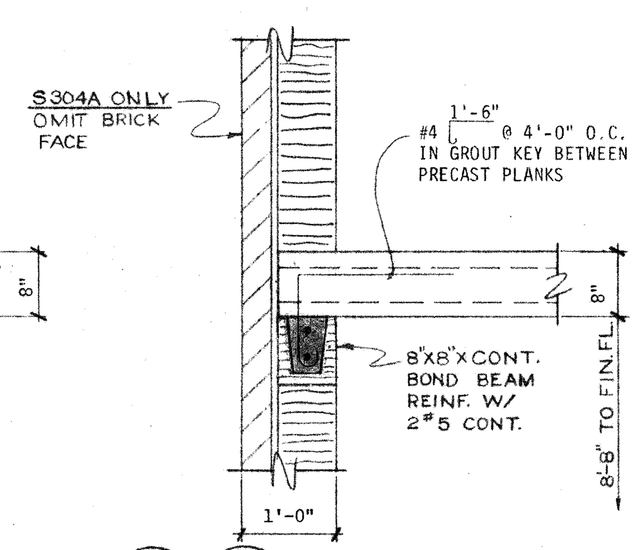

S304 S304A SECTION

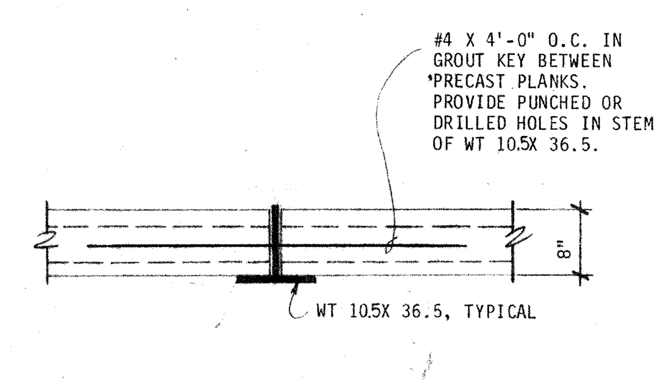

S305 SECTION

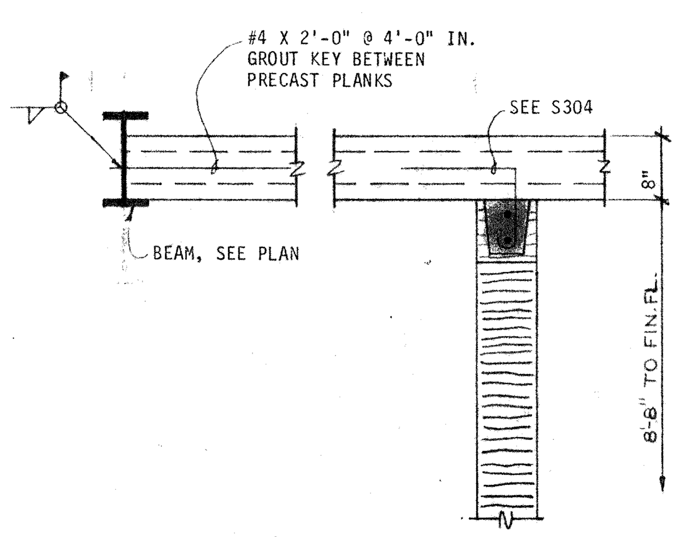

S306 SECTION

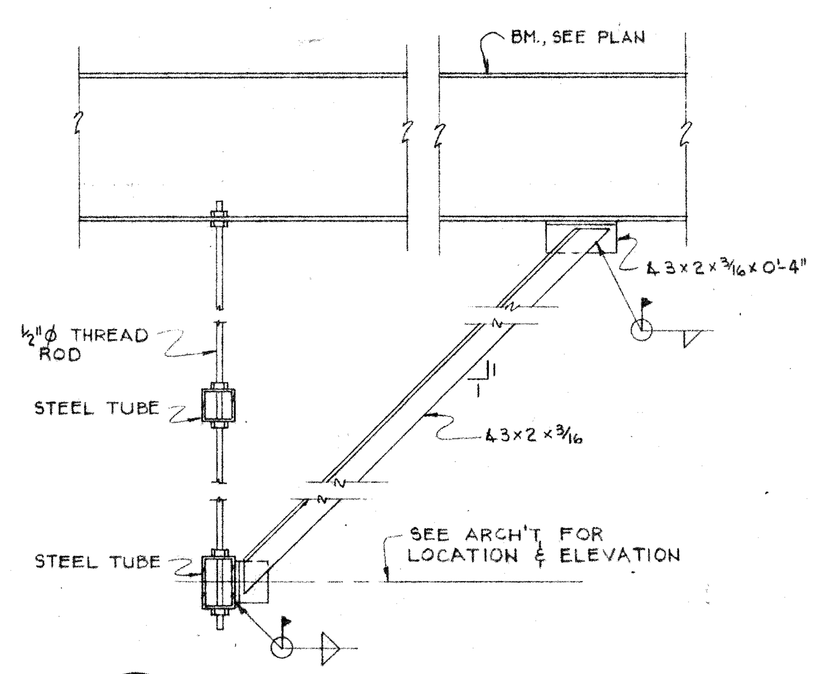

S307 DETAIL
1"=1'-0"

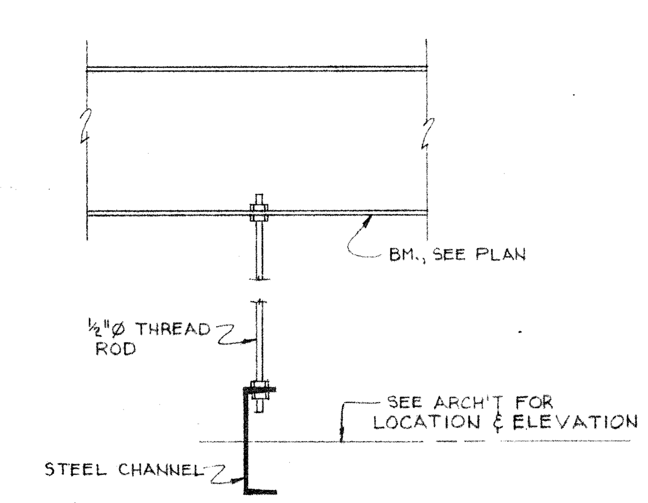

S308 DETAIL
1"=1'-0"

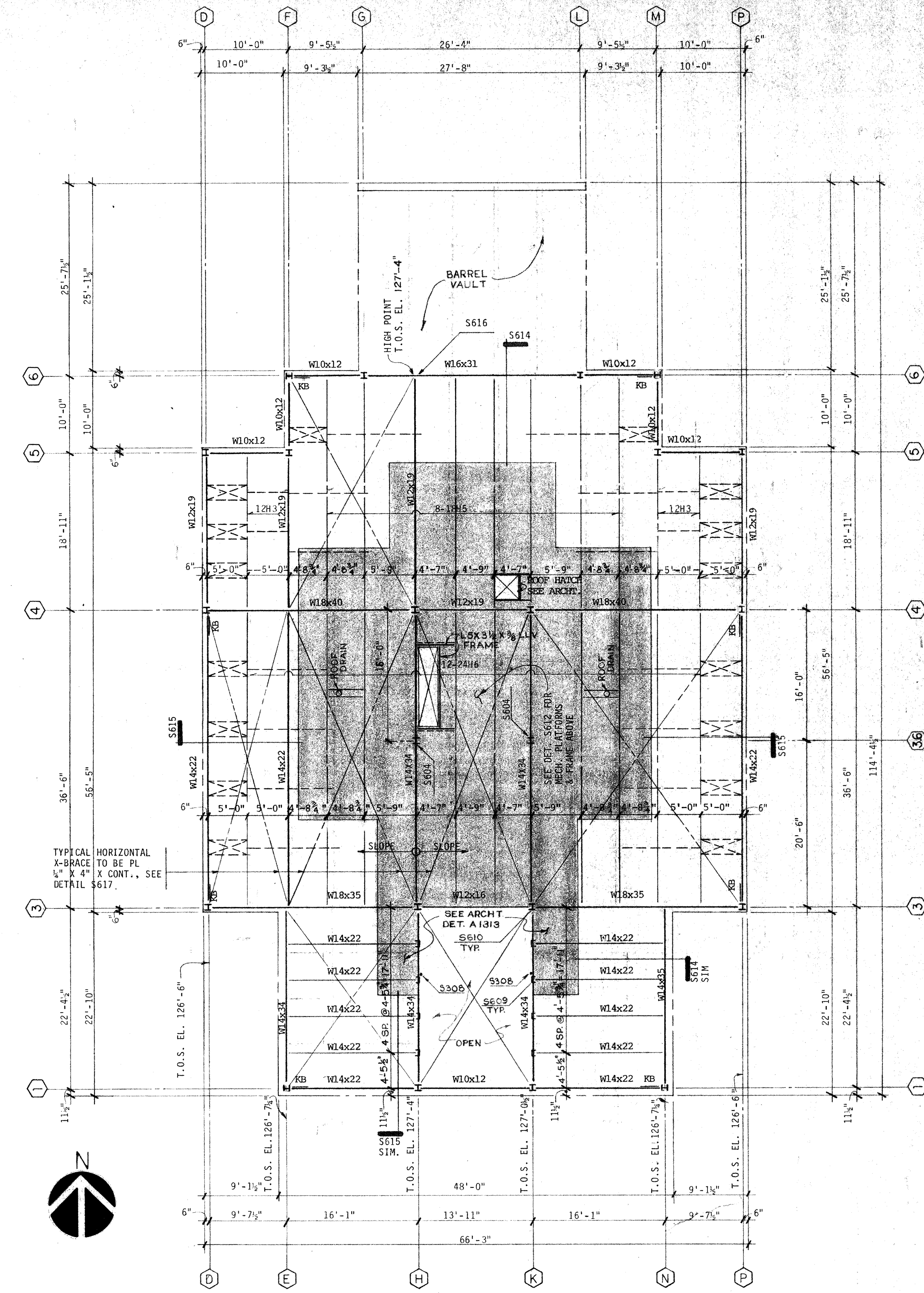

NOTE: ROOF DECK AT SHADED AREA ONLY

S302 HIGH ROOF FRAMING PLAN
1/8" = 1'-0"

SHEPHERD + BOYD
ARCHITECTS/PLANNERS & INTERIORS
8235 DOUGLAS AVENUE
DOUGLAS BUILDING SUITE 900
DALLAS TEXAS 75225
TELEPHONE 214/691-9000

A NEW POLICE FACILITY FOR THE
TOWN OF ADDISON
4799 AIRPORT PARKWAY
ADDISON, TEXAS 75248

REGISTERED ARCHITECT STATE OF TEXAS

REVISIONS

DATE 7-12-82

SLIDER/REED, INC.
STRUCTURAL ENGINEERS AND PLANNERS
DALLAS, TEXAS 214-748-0416

JAMES T. SLIDER

SHEET
S3