NOTE :
FRAME AND COVER SHALL BE BASS & HAYES PATTERN NO. 380-24 OR EQUAL AND SHALL BE GRAY CAST IRON CONFORMING TO ASTM SPEC. A-48 FOR CLASS 30 CAST IRON.

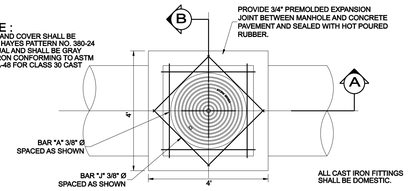

PLAN
N.T.S.

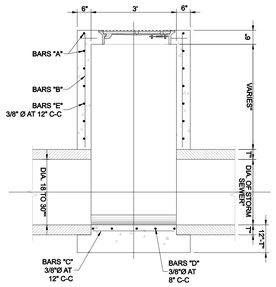

SECTION A
N.T.S.

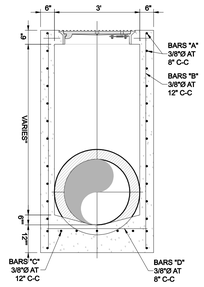

SECTION B
N.T.S.

3' SQ STORM DRAIN MANHOLE
N.T.S.

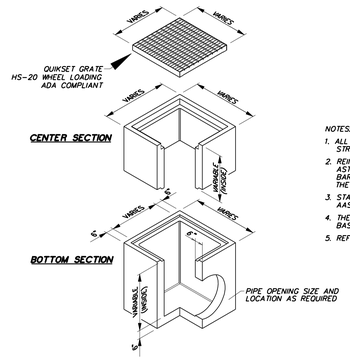

NOTES:
1. ALL CONCRETE SHALL HAVE A 28 DAY COMPRESSIVE STRENGTH OF 4500 psi.
2. REINFORCING STEEL SHALL COMPLY WITH ASTM A615 GRADE 60, A706 GRADE 60 OR A497 GRADE 70. BAR BENDING AND PLACEMENT SHALL COMPLY WITH THE LATEST ACI STANDARDS
3. STANDARD STRUCTURAL DESIGN IS BASED ON AASHTO HS-20 WHEEL LOADING
4. THE STRUCTURE SHALL BE PLACED ON A COMPACTED GRANULAR BASE TO INSURE UNIFORM DISTRIBUTION OF SOIL PRESSURES.
5. REFER TO STORM SEWER PLAN FOR SIZES REQUIRED.

GRATE INLET
NOT TO SCALE

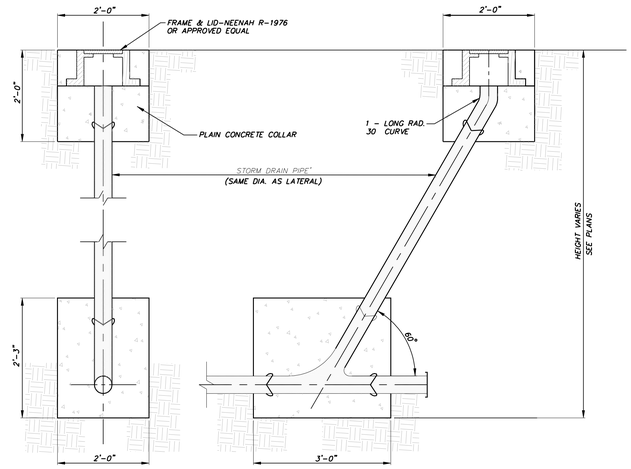

STORM DRAIN CLEANOUT
NOT TO SCALE

STA 0+00.00 - A1 & A2
STA 0+00.00 - B1 & B2

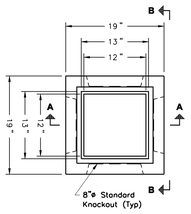

PLAN VIEW
(C.I. Grate not Shown)

GENERAL NOTES:
1. CONCRETE: SHALL HAVE A MINIMUM DESIGN STRENGTH OF 5,000 PSI AT 28 DAYS.
2. STEEL REINFORCEMENT: ASTM A-615, GRADE 60 OR ASTM A-497 WELDED WIRE FABRIC.
3. LOADING: DESIGNED FOR H20 LOADING.
4. C.I. CASTINGS: ASTM A-48, CLASS 30/35.
5. PROVIDE FRAME AND COVER AS REQUIRED.
6. PROVIDE BODY AND EXTENSIONS AS REQUIRED.

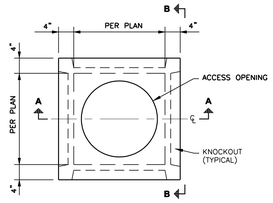

PLAN VIEW

GENERAL NOTES:
1. CONCRETE: SHALL HAVE A MINIMUM DESIGN STRENGTH OF 5,000 PSI AT 28 DAYS.
2. STEEL REINFORCEMENT: ASTM A-615, GRADE 60 OR ASTM A-497 WELDED WIRE FABRIC.
3. LOADING: DESIGNED FOR H20 LOADING.
4. C.I. CASTINGS: ASTM A-48, CLASS 30/35.
5. PROVIDE FRAME AND COVER AS REQUIRED.
6. PROVIDE BODY AND EXTENSIONS AS REQUIRED.

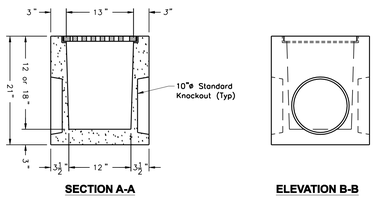

13" X 13" I.D. CATCH BASIN
NOT TO SCALE

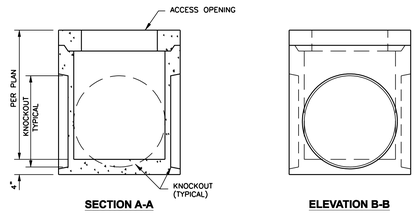

JUNCTION BOX DETAIL (2' SQ ID OR LESS)
NOT TO SCALE

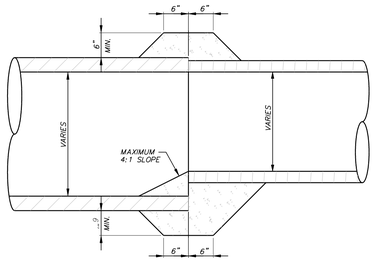

CONCRETE COLLAR
NOT TO SCALE

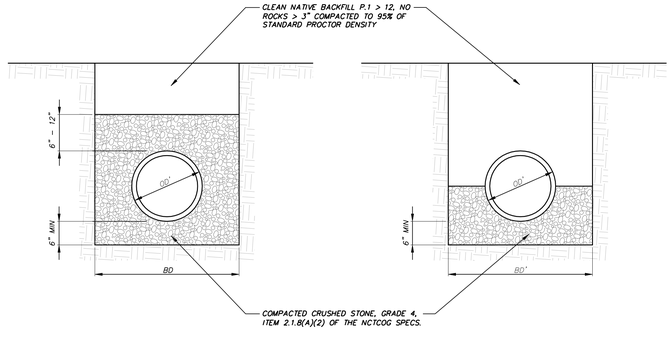

24" MINIMUM COVER
HIGH DENSITY POLYETHYLENE
(FOR PRIVATE USE ONLY)

24" MINIMUM COVER
REINFORCED CONCRETE PIPE OR POLYVINYL CHLORIDE PIPE (PVC)
(FOR PRIVATE OR PUBLIC USE)

STORM DRAIN EMBEDMENT
NOT TO SCALE

Good Fulton & Farrell Architects
2808 Fairmount Street
Suite 300
Dallas, Texas 75201
214.303.1500/Tel
214.303.1512/Fax
www.gff.com

icon
Consulting Engineers, Inc.
Civil Engineers - Designers - Planners
Bicentennial Financial Center
250 W. Southlake Blvd., Suite 117
Southlake, Tx 76092
Phone: (817) 552-6210
Fax: (817) 552-3126

UDR

VITRUVIAN PARK RESTROOM
VITRUVIAN WAY
ADDISON, TX 75001

No.	Date	Item

REVISIONS

ICE
Drawn
JAM
Checked
BFD
Approved

BRUCE F. DUNNE
62654
LICENSED
PROFESSIONAL ENGINEER

STORM DRAIN DETAILS

Project No.	10061.10
Date	06.28.12
Last Revision	

C4.02