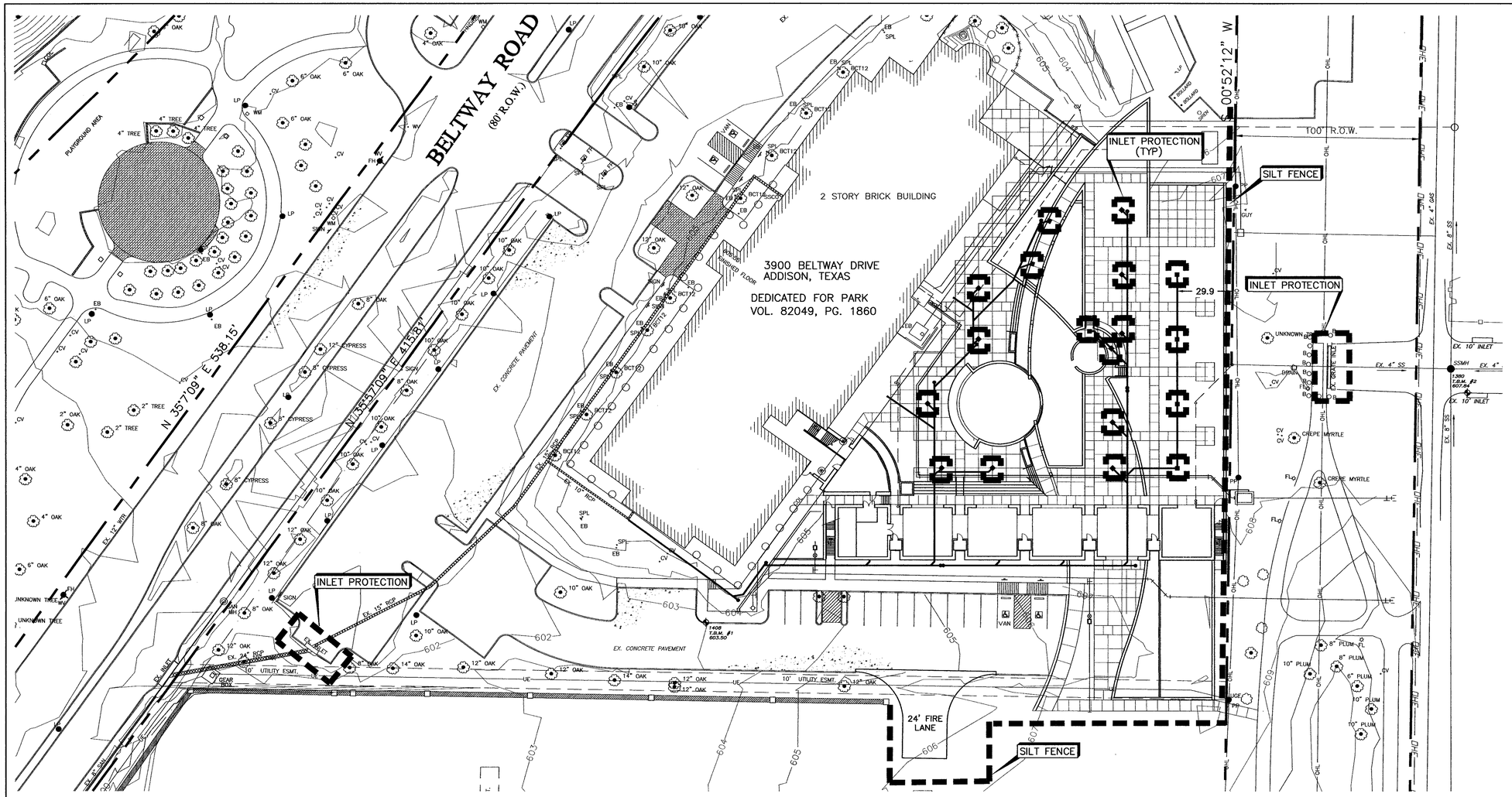

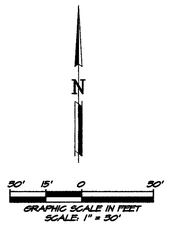

LEGEND

INLET PROTECTION

SILT FENCE

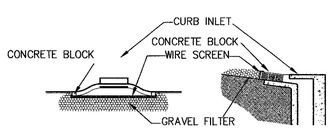

CURB INLET PROTECTION

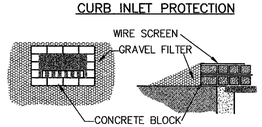

DROP INLET PROTECTION

BLOCK AND GRAVEL PROTECTION CONCRETE BLOCKS ARE TO BE PLACED ON THEIR SIDES IN A SINGLE ROW AROUND THE PERIMETER OF THE INLET, WITH ENDS ABUTTING. OPENING IN THE BLOCKS SHOULD FACE OUTWARD, NOT UPWARD. WIRE MESH SHALL THEN BE PLACED OVER THE OUTSIDE FACE OF THE BLOCKS COVERING THE HOLES. FILTER STONE SHALL THEN BE PILED AGAINST THE WIRE MESH TO THE TOP OF THE BLOCKS WITH THE BASE OF THE STONE BEING A MINIMUM OF 18 INCHES FROM THE BLOCKS. PERIODICALLY, WHEN THE STONE FILTER BECOMES CLOGGED, THE STONE MUST BE REMOVED AND CLEANED IN A PROPER MANNER OR REPLACED WITH NEW STONE AND PILED BACK AGAINST THE WIRE MESH.

4' (1.2 m) MIN. STEEL OR WOOD POSTS SPACED AT 5' (1.8 m) TO 8' (2.4 m) SOFTWOOD POSTS SHALL BE 3" (7.6 cm) MIN. IN. DIA. OR NOMINAL 2"x4" (5.1 cm x 10.2 cm). HARDWOOD POSTS SHALL HAVE A MIN. CROSS SECTION OF 1.5"x1.5" (3.8 cm x 3.8 cm).

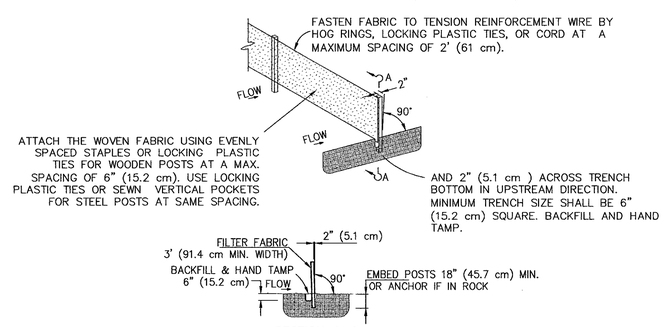

SILT FENCE

CONSTRUCTION NOTES – SILT FENCE

1. POSTS WHICH SUPPORT THE SILT FENCE SHALL BE INSTALLED ON A SLIGHT ANGLE TOWARD THE ANTICIPATED RUNOFF SOURCE. THE POST MUST BE EMBEDDED A MINIMUM OF 18 INCHES.
2. THE TOE OF THE SILT FENCE SHALL BE TRENCHED IN WITH A SPADE OR MECHANICAL TRENCHER, SO THAT THE DOWNSLOPE FACE OF THE TRENCH IS FLAT AND PERPENDICULAR TO THE LINE OF FLOW. WHERE FENCE CANNOT BE TRENCHED IN (E.G. PAVEMENT), WEIGHT FABRIC FLAP WITH WASHED GRAVEL ON THE UPHILL SIDE TO PREVENT FLOW UNDER FENCE.
3. THE TRENCH MUST BE A MINIMUM OF 6 INCHES DEEP AND 6 INCHES WIDE TO ALLOW FOR THE SILT FENCE FABRIC TO BE LAID IN THE GROUND AND BACKFILLED WITH COMPACTED MATERIAL.
4. SILT FENCE SHALL BE SECURELY FASTENED TO EACH SUPPORT POST OR TO WOVEN WIRE, WHICH IS IN TURN ATTACHED TO THE SUPPORT POST. THERE SHALL BE A 6 INCH DOUBLE OVERLAP, SECURELY FASTENED WHERE ENDS OF FABRIC MEET.
5. INSPECTION SHALL BE MADE WEEKLY OR AFTER EACH RAINFALL. REPAIR OR REPLACEMENT SHALL BE MADE PROMPTLY AS NEEDED.
6. SILT FENCE SHALL BE REMOVED WHEN THE SITE IS COMPLETELY STABILIZED SO AS NOT TO BLOCK OR IMPEDE STORM FLOW OR DRAINAGE.
7. ACCUMULATED SILT SHALL BE REMOVED WHEN IT REACHES A DEPTH OF 6 INCHES. THE SILT SHALL BE DISPOSED OF AT AN APPROVED SITE AND IN SUCH A MANNER AS TO NOT CONTRIBUTE TO ADDITIONAL SILTATION.

NOTES:

THE CONTRACTOR SHALL PROVIDE ANY ADDITIONAL EROSION OR POLLUTION CONTROL DEVICES AS REQUIRED DURING THE CONSTRUCTION PHASE IN ORDER TO COMPLETELY CONFORM TO THE UNITED STATES ENVIRONMENTAL PROTECTION AGENCY AND ALL OTHER AGENCIES HAVING JURISDICTION. CONTRACTOR AND OWNER SHALL FILE N.O.I. PER EPA REQUIREMENTS.

STATE OF TEXAS
TUAN P. LAM
86968
LICENSED
PROFESSIONAL ENGINEER

THE SEAL APPEARING ON THIS DOCUMENT WAS AUTHORIZED BY TUAN P. LAM, P.E. 86968 ON 02-20-02. ALTERATION OF A SEALED DOCUMENT WITHOUT THE PROPER NOTIFICATION TO THE RESPONSIBLE ENGINEER IS AN OFFENSE UNDER THE TEXAS ENGINEERING PRACTICE ACT.

EROSION CONTROL PLAN
ADDISON ATHLETIC CLUB EXPANSION & LEISURE POOL
ADDISON, TEXAS

R–DELTA ENGINEERS, INC.
618 MAIN STREET GARLAND , TEXAS 75040
Phone (972) 494–5031 www.rdelta.com

DESIGN:	CTL	CHECK:	JRP	SCALE:	1"=30'	8 OF 11
DRAWN:	CEM	DATE: FEBRUARY, 2002		PROJECT:	982–01	