AAC Expansion

TOWN OF ADDISON

ADDISON ATHLETIC CLUB
EXPANSION & LEISURE POOL
ADDISON, TEXAS

ISSUE DATE: FEBRUARY 20, 2002
CITY OF ADDISON BID NO. 26-02

MAYOR
R SCOTT WHEELER

CITY COUNCIL
DIANE MALLORY
CATHY WAYS
GLYNDA TURNER
BOB BARRETT
FREDRIC M. SILVER
FRANK R. KLEIN

CITY MANAGER
RON WHITEHEAD

INDEX OF DRAWINGS

CIVIL

C101	PLAT
C101A	PLAT LEGAL DESCRIPTION
C102	DEMOLITION PLAN
C103	SITE PLAN LEISURE POOL
C104	GRADING PLAN
C105	STORM SEWER PLAN
C106	PAVING PLAN
C107	WATER & SANITARY SEWER PLAN
C107A	UTILITY PROFILE
C108	EROSION CONTROL PLAN
C109	TENNIS COURT ALT #5
C110	PARKING EXPANSION ALT #3
C111	CONSTRUCTION DETAILS

LANDSCAPING

L1.1	BASE BID AND ALTERNATES SITE PLAN
L1.2	HARDSCAPE PLAN
L1.3	HARDSCAPE ALTERNATES PLANS
L1.4	HARDSCAPE DETAILS
L2.1	LANDSCAPE PLAN
L2.2	LANDSCAPE ALTERNATE PLANS
L2.3	LANDSCAPE DETAILS
L3.1	IRRIGATION PLANS
L3.2	IRRIGATION ALTERNATE PLANS
L3.3	IRRIGATION ALTERNATE PLANS
L3.4	IRRIGATION DETAILS

ARCHITECTURAL

ASP1	SITE PLAN- DIMENSIONS
ASP2	SITE PLAN- BASE BID
ASP3	SITE PLAN- ALTERNATES
ASP4	SITE PLAN- TENNIS COURT- ALT #5
D101	DEMOLITION FLOOR PLAN
D801	DEMOLITION SECTION
A101	FIRST FLOOR PLAN- 1/8"
A102	SECOND FLOOR PLAN -1/8"
A103	DETAIL FLOOR PLANS- 1/4"
A104	DETAIL FLOOR PLANS- 1/4"
A105	DETAIL FLOOR PLANS- 1/4"
A201	1/8" EXTERIOR ELEVATIONS- ADDITION
A202	1/8" EXTERIOR ELEVATIONS - SITE
A301	ROOF PLAN
A401	REFLECTED CEILING PLAN- LOWER LEVEL
A402	REFLECTED CEILING PLAN- UPPER LEVEL
A501	INTERIOR ELEVATIONS
A502	INTERIOR ELEVATIONS
A503	INTERIOR ELEVATIONS
A601	MILLWORK SECTIONS & DETAILS
A701	FLOOR FINISH PLAN
A801	WALL SECTIONS
A802	WALL SECTIONS
A803	WALL SECTIONS
A804	WALL SECTIONS
A805	WALL SECTIONS
A806	WALL SECTIONS
A807	WALL SECTIONS
A808	WALL SECTIONS
A809	WALL SECTIONS
A810	WALL SECTIONS
A811	WALL SECTIONS
A901	DETAILS
A902	DETAILS
A903	DETAILS

POOL

SP0.0	SITE PLAN
SP1.0	LEISURE POOL PLAN
SP1.1	POOL SECTIONS & DETAILS
SP1.2	POOL DETAILS
SP1.3	POOL DETAILS
SP1.4	LOCATION POINT SCHEDULE
SP2.0	SUPPLY PIPING PLAN
SP2.1	RETURN PIPING PLAN
SP3.0	FILTER ROOM PLAN & DETAILS
SP3.1	PIPING & EQUIPMENT DETAILS
SP3.2	CHEMICAL SCHEMATICS
SP3.3	CHILDREN'S POOL

STRUCTURAL

S1.01	GENERAL NOTES
S2.00	EXISTING AREA PLANS
S2.01	FOUNDATION PLAN
S2.02	SECOND FLOOR FAMING PLAN
S2.03	ROOF FRAMING PLAN
S2.04	POOL & AQUEDUCT PLAN
S2.05	RETAINING WALL PLAN
S3.01	TYPICAL SECTIONS & DETAILS
S3.02	TYPICAL POOL SECTIONS & DETAILS
S3.03	TYPICAL SECTIONS & DETAILS
S4.01	CMU SECTIONS & DETAILS
S5.01	CONCRETE SECTIONS & DETAILS
S6.01	STEEL SECTIONS & DETAILS

MECHANICAL

M101	HVAC FLOOR PLAN

ELECTRICAL

E100	ELECTRICAL SITE PLAN
E101	LIGHTING FLOOR PLAN
E102	POWER FLOOR PLAN
E103	SCHEDULES, DETAILS & PANEL DIAGRAMS
E104	ELECTRICAL POOL PLAN

PLUMBING

P100	PLUMBING SITE PLAN AND EXISTING BUILDING
P101	PLUMBING FLOOR PLAN

BUILDING SOLUTIONS
(CONSTRUCTION MANAGEMENT)
9304 FOREST LANE, SUITE 107S
DALLAS, TEXAS 75243
PHONE (214) 221-9145

RON HOBBS ARCHITECTS
(ARCHITECTURE)
614 W. MAIN STREET SUITE #200
GARLAND, TEXAS 75040
PHONE (972) 494-0174

R - DELTA ENGINEERS, INC.
(CIVIL)
618 MAIN STREET
GARLAND, TEXAS 75040
PHONE (972) 494-5031

DAVID C. BALDWIN, INC.
(LANDSCAPE)
5744 RICHMOND AVENUE
DALLAS, TEXAS 75206
PHONE (214) 821-8100

LEE & BALDAUF CONSULTING ENGINEERS, INC.
(STRUCTURAL)
12980 PANDORA DRIVE
DALLAS, TEXAS 75238
PHONE (214) 342-0399

COUNSILMAN-HUNSAKER
(POOL)
4969 AMBS ROAD
ST LOUIS, MISSOURI 63128
PHONE (314) 894-1245

HALFF ASSOCIATES, INC
(M/E/P)
8616 NORTHWEST PLAZA DRIVE
DALLAS, TEXAS 75225
PHONE (214) 217-6415

FF-21

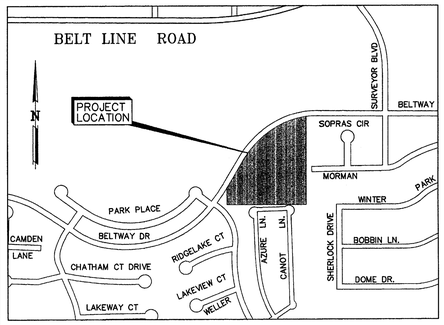

MAPSCO 14E

VICINITY MAP
N.T.S.

LINE CHART		
COURSE	BEARING	DISTANCE
L-1	S 00°55'55"W	10.00'
L-2	N 89°56'11"W	102.97'
L-3	S 35°49'16"W	116.81'
L-4	N 54°10'44"W	10.00'
L-5	N 35°49'16"E	121.93'
L-6	S 89°56'11"E	108.24'
L-7	N 89°04'38"W	34.80'
L-8	N 44°04'38"W	13.05'
L-9	N 89°04'38"W	25.94'
L-10	S 00°01'38"E	16.50'
L-11	S 89°58'22"W	10.00'
L-12	N 00°01'38"W	16.67'
L-13	N 89°04'38"W	164.23'
L-14	S 45°03'49"W	11.03'
L-15	S 00°03'49"W	10.00'
L-16	N 89°56'11"W	10.00'
L-17	N 00°03'49"E	14.14'
L-18	N 45°03'49"E	19.41'
L-19	S 89°04'38"E	19.14'
L-20	N 00°55'22"E	10.00'
L-21	S 89°04'38"E	10.00'
L-22	S 00°55'22"W	10.00'
L-23	S 89°04'38"E	179.41'
L-24	S 44°04'38"E	13.05'
L-25	S 89°04'38"E	30.66'

NOTE:
ALL CORNERS WITH OPEN CIRCLE ARE 1/2 INCH IRON RODS SET WITH A PLASTIC CAP STAMPED "R-DELTA ENGINEERS" UNLESS OTHERWISE NOTED.

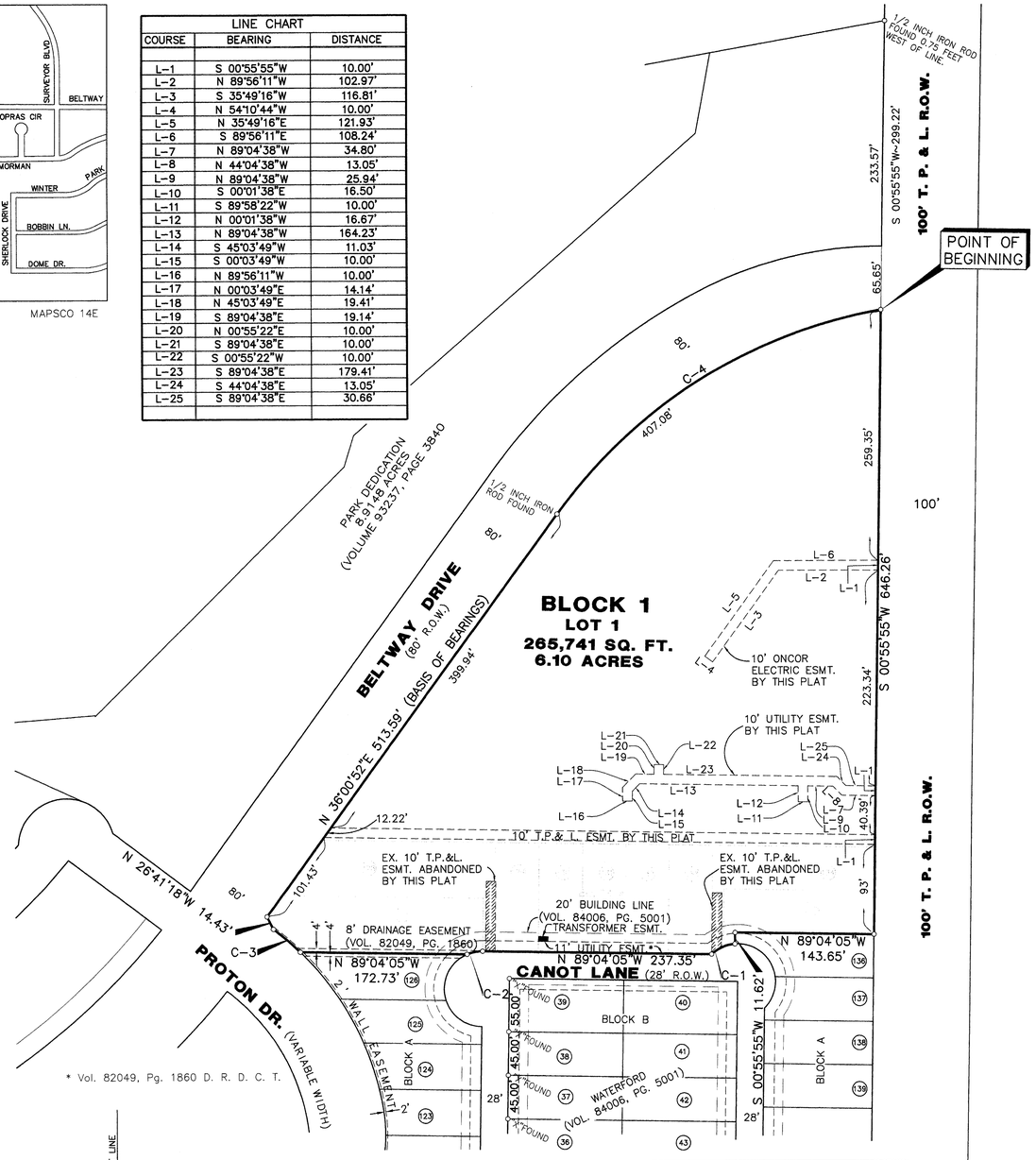

* Vol. 82049, Pg. 1860 D. R. D. C. T.

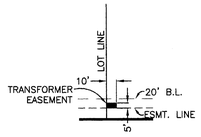

TYPICAL 5' x 10' TRANSFORMER ESMT. TO T.P.& L.

CURVE DATA CHART						
CURVE	RADIUS	TANGENT	LENGTH	DELTA	CHORD	CH.BEARING
C-1	39.00'	14.00'	26.88'	39°29'48"	26.36'	S 66°33'56"W
C-2	39.00'	8.35'	16.44'	24°09'23"	16.32'	S 78°51'13"W
C-3	294.50'	18.32'	36.59'	7°07'10"	36.57'	N 49°30'26"W
C-4	530.00'	214.17'	407.08'	44°00'27"	397.15'	N 58°01'05"E

N

60 0 60 120 180
Scale: 1 inch = 60 feet or 1:720

LEGEND	
D.R.D.C.T.	Deed Records of Dallas County, Texas
N	North
S	South
E	East
W	West
C	Curve
L	Line
°	Degrees
'	Minutes or Feet
"	Seconds
*	Indicates Footnote
ESMT	Easement
EX.	Existing

TOWN OF ADDISON

FINAL PLAT
LOT 1, BLOCK 1
ADDISON ATHLETIC CLUB
A PARTIAL REPLAT OF LES LACS GARDEN HOMES
AND LOTS 127 THROUGH 135, BLOCK A OF WATERFORD

An Addition to the City of Addison,
Dallas County, Texas.

OWNER:
Town of Addison
16801 Westgrove Rd.
Addison, TX. 75248

PREPARED BY:
R-DELTA ENGINEERS, INC.
618 MAIN STREET GARLAND TX. 75040
Phone: (972) 494-5031 Fax: (972) 487-2270
www.rdelta.com
RDE #982-01

NOVEMBER 2001

PAGE 1 OF 2

ISSUE DATE
FEB. 20, 2002

REVISIONS

ADDISON ATHLETIC CLUB EXPANSION
AND
LEISURE POOL
ADDISON, TEXAS

RON HOBBS ARCHITECTS
614 W. MAIN ST. SUITE #200 GARLAND, TEXAS 75040
(972) 494-0174 FAX (972) 494-0722

JOB NUMBER
0012

SHEET NAME
PLAT

SHEET NUMBER
C101

OWNERS CERTIFICATE

BEING a 265,741 square foot or 6.101 acre tract of land in the City of Addison, Dallas County, Texas and being all of the 4.6000 acre tract dedicated for park purposes as part of the Les Lacs Garden Homes a subdivision of the City of the City of Addison according to the plat thereof recorded in Volume 82049, at Page 1860 of the Deed Records of Dallas County, Texas, and also being lots 127, 128, 129, 130, 131, 132, 133, 134, and135 in Block A of Waterford, a partial replat of Les Lacs Garden Homes, a subdivision of the City of Addison, according to the plat thereof recorded in Volume 84006, at Page 5001 of the Deed Records of Dallas County, Texas, and being more particularly described as follows:

BEGINNING at a 1/2 inch iron rod set with a cap stamped "R-DELTA ENGINEERS" in the west right-of-way line of a 100-foot Texas Power & Light Company right-of-way at its intersection with the southerly right-of-way line of Beltway Drive (a variable width right-of-way at this point), said point being the northeast corner of the aforementioned 4.6000 acre tract;

THENCE, South 00 degrees 55 minutes 55 seconds West with common line between the west right-of-way line of the 100-foot Texas Power & Light Company right-of-way and the east line of the aforementioned 4.6000 acre tract, at a distance of 556.26 feet (plat: 556.07 feet) pass the southeast corner of said 4.6000 acre tract and the northeast corner of said Lot 134 in Block A of Waterford and continuing on the same course an additional distance of 90.00 feet for a total distance of 646.26 feet to a 1/2 inch iron rod set with a cap stamped "R-DELTA ENGINEERS" for the southeast corner of said Lot 135 and the northeast corner of Lot 136 in Block A of Waterford;

THENCE, North 89 degrees 04 minutes 05 seconds West with the common line between said Lot 135 and Lot 136, for a distance of 143.65 feet to a 1/2 inch iron rod set with a cap stamped "R-DELTA ENGINEERS" an interior ell corner of said Lot 135 and for the northwest corner of Lot 136 in Block A of Waterford;

THENCE, South 00 degrees 55 minutes 55 seconds West continuing with a common line between said Lot 135 and Lot 136, for a distance of 1.62 feet to a 1/2 inch iron rod set with a cap stamped "R-DELTA ENGINEERS" on the northerly right-of-way line of Canot Lane, said point being on a curve concave to the south having a radius of 39.00 feet, a central angle of 39 degrees 29 minutes 48 seconds and a chord that bears South 66 degrees 33 minutes 56 seconds West for a distance of 26.36 feet;

THENCE, in a westerly direction with the northerly right-of-way line of said Canot Lane and with the arc of said curve 26.88 feet to an 1/2 inch iron rod set with a cap stamped "R-DELTA ENGINEERS" for the end of said curve;

THENCE, North 89 degrees 04 minutes 05 seconds West with the north right-of-way line of said Canot Lane (28-foot right-of-way at this point) for a distance of 237.35 feet to an 1/2 inch iron rod set with a cap stamped "R-DELTA ENGINEERS" for the point of curvature of a curve concave to the south having a radius of 39.00 feet, a central angle of 24 degrees 09 minutes 23 seconds and a chord that bears South 78 degrees 51 minutes 13 seconds West for a distance of 16.32 feet;

THENCE, in a westerly direction with the northerly right-of-way line of said Canot Lane and with the arc of said curve for a distance of 16.44 feet to a 1/2 inch iron rod set with a cap stamped "R-DELTA ENGINEERS" for the northeast corner of Lot 126 in Block A of said Waterford and an angle point in the south line of the aforementioned Lot 127;

THENCE, North 89 degrees 04 minutes 05 seconds West with the common line between said Lot 126 and Lot 127 for a distance of 172.73 feet to a 1/2 inch iron rod set with a cap stamped "R-DELTA ENGINEERS" at the beginning of a curve concave to the southwest having a radius of 294.50 feet, a central angle of 7 degrees 07 minutes 10 seconds and a chord that bears North 49 degrees 30 minutes 26 seconds West for a distance of 36.57 feet said point being in the northeast right-of-way line of Proton Drive (a variable width right-of-way at this point);

THENCE, in a northwesterly direction with northerly right-of-way line of said Proton Drive and with the arc of said curve for a distance of 36.59 feet to a 1/2 inch iron rod set with a cap stamped "R-DELTA ENGINEERS" at the corner clip between said Proton Drive and Beltway Drive (80-foot right-of-way);

THENCE, North 26 degrees 41 minutes 18 seconds West with said corner clip for a distance of 14.43 feet (plat: 14.31 feet) to a 1/2 inch iron rod set with a cap stamped "R-DELTA ENGINEERS" in the southeast right-of-way line of said Beltway Drive;

THENCE, North 36 degrees 00 minutes 52 seconds East (Basis of Bearings) with the southeast right-of-way line of said Beltway Drive at a distance of 97.68 feet pass the northwest corner of the aforementioned Lot 128, Block A and the southwest corner of the aforementioned 4.6000 acre tract, and continuing on the same course an additional distance of 415.91 feet (plat: 415.81 feet) to a 1/2 inch iron rod found for the point of curvature of a curve concave to the southeast having a radius of 530.00 feet, a central angle of 44 degrees 00 minutes 27 seconds and a chord that bears North 58 degrees 01 minute 05 seconds East for a distance of 397.15 feet;

THENCE continuing with the southeasterly right-of-way line of said Beltway Drive and with the arc of said curve for a distance of 407.08 feet to the POINT OF BEGINNING and containing 265,741 square feet or 6.101 acres of land.

Areas indicated hereon are the results of calculations from reported positions and are subject to the minimum standards of surveying precision. The variation from the reported area may be up to 53 square feet.

The bearings reported hereon are based on the record bearing for Beltway Drive as constructed through a 1/2 inch iron rod found for the southwest point of curvature of the curve having a 530.00 foot radius on the southeasterly right-of-way line of Beltway Drive in the 4.6000 acre tract and an "X" found cut in concrete for the southwest corner of Lot 37, in Block B of the Waterford plat.

NOW THEREFOR, KNOW ALL MEN BY THESE PRESENTS:

That The Town Of Addison is the Owner of the above described property and does hereby adopt this plat designating the herein above property as Addison Athletic Club, an addition to the Town of Addison, Texas, and, subject to the conditions, restrictions and reservations stated hereinafter, owner dedicates to the public use forever the streets and alleys shown thereon.

The easements shown on this plat are hereby reserved for the purposes as indicated, including, but not limited to, the installation and maintenance of water, sanitary sewer, storm sewer, drainage, electric, telephone, gas and cable television. Owner shall have the right to use these easements, provided however, that it does not unreasonably interfere or impede with the provision of the services to others. Said utility easements are hereby being reserved by mutual use and accommodation of all public utilities using or desiring to use the same. An express easement of ingress and egress is hereby expressly granted on, over and across all such easements for the benefit of the provider of services for which easements are granted.

Any drainage and floodway easement shown hereon is hereby dedicated to the public's use forever, but including the following covenants with regards to maintenance responsibilities. The existing channels or creeks traversing the drainage and floodway easement will remain as an open channel, unless required to be enclosed by ordinance, at all times and shall be maintained by the individual owners of the lot or lots that are traversed by or adjacent to the drainage and floodway easement. The City will not be responsible for ht the maintenance and operation of said creek or creeks for any damage or injury of private property or person that results from the flow of water along said creek, or for the control of erosion. No obstruction to the natural flow of water run-off shall be permitted by construction of any type building, fence or any other structure within the drainage and floodway easement. Provided, however, it is understood that in the event it becomes necessary for the City to channelize or consider erecting any type of drainage structure in order to improve the storm drainage, then in such event, the City shall have the right, but not the obligation, to enter upon the drainage and floodway easement at any point, or points, with all rights of ingress and egress to investigate, survey, erect, construct or maintain any drainage facility deemed necessary by the City for maintenance or efficiency of its respective system or service.

Water main and sanitary sewer easements shall also include additional area of working space for construction and maintenance of the systems. Additional easement area is also conveyed for installation and maintenance of manholes, cleanouts, fire hydrants, water service and sewer services from the main to curb or pavement line, and the descriptions of such additional easements herein granted shall be determined by their locations as installed.

This plat is approved subject to all platting ordinances, rules, regulations and resolutions of the Town of Addison, Texas.

SURVEYOR'S CERTIFICATE

I, Wayne C. Terry, A Registered Professional Land Surveyor in the State of Texas, Do certify that I have prepared this plat from an actual on the ground survey of the land, and the monuments shown thereon were found and/or placed under my personal supervision in accordance with the platting rules and regulations of the City Plan Commission of the City of Addison, Dallas County, Texas.

STATE OF TEXAS REGISTERED WAYNE C. TERRY 4184 PROFESSIONAL LAND SURVEYOR

_____
Wayne C. Terry
Registered Professional Land Surveyor
Registration No. 4184

STATE OF TEXAS
COUNTY OF DALLAS

BEFORE ME, the undersigned authority, a Notary Public in and for the State of Texas, on this day personally appeared Wayne C. Terry, known to be the person whose name is subscribed to the foregoing instrument and acknowledged to me that he executed the same for purposes and considerations therein expressed and in the capacity therein stated.

GIVEN UNDER MY HAND AND SEAL OF OFFICE THIS
THE _____ DAY OF _____, 2002.

_____
Notary Public in and for the State of Texas

My Commission Expires _____

STATE OF TEXAS
COUNTY OF DALLAS

BEFORE ME, the undersigned authority, a Notary Public in and for the State of Texas, on this day personally appeared _____, known to be the person whose name is subscribed to the foregoing instrument and acknowledged to me that he executed the same for purposes and considerations therein expressed and in the capacity therein stated.

GIVEN UNDER MY HAND AND SEAL OF OFFICE THIS
THE _____ DAY OF _____, 2002.

_____
Notary Public in and for the State of Texas

My Commission Expires _____

APPROVED and ACCEPTED for the City of Addison this _____ day of _____, 2002.

The approval of this plat is contingent upon the plat being filed for record with the County Clerk of Dallas County within 180 days from the above date.

_____
Mayor: R. Scott Wheeler

_____
City Secretary

TOWN OF ADDISON

FINAL PLAT
LOT 1, BLOCK 1
ADDISON ATHLETIC CLUB
A PARTIAL REPLAT OF LES LACS GARDEN HOMES
AND LOTS 127 THROUGH 135, BLOCK A OF WATERFORD

An Addition to the City of Addison,
Dallas County, Texas.

OWNER:
Town of Addison
16801 Westgrove Rd.
Addison, TX. 75248

PREPARED BY:
R-DELTA ENGINEERS, INC.
618 MAIN STREET GARLAND TX. 75040
Phone: (972) 494-5031 Fax: (972) 487-2270
www.rdelta.com
RDE #982-01

NOVEMBER 2001

ISSUE DATE
FEB. 20, 2002

REVISIONS

ADDISON ATHLETIC CLUB EXPANSION
AND
LEISURE POOL
ADDISON, TEXAS

RON HOBBS ARCHITECTS
614 W. MAIN ST. SUITE #200 GARLAND, TEXAS 75040
(972) 494-0174 FAX (972) 494-0722

JOB NUMBER
0012

SHEET NAME
PLAT

SHEET NUMBER
C101A

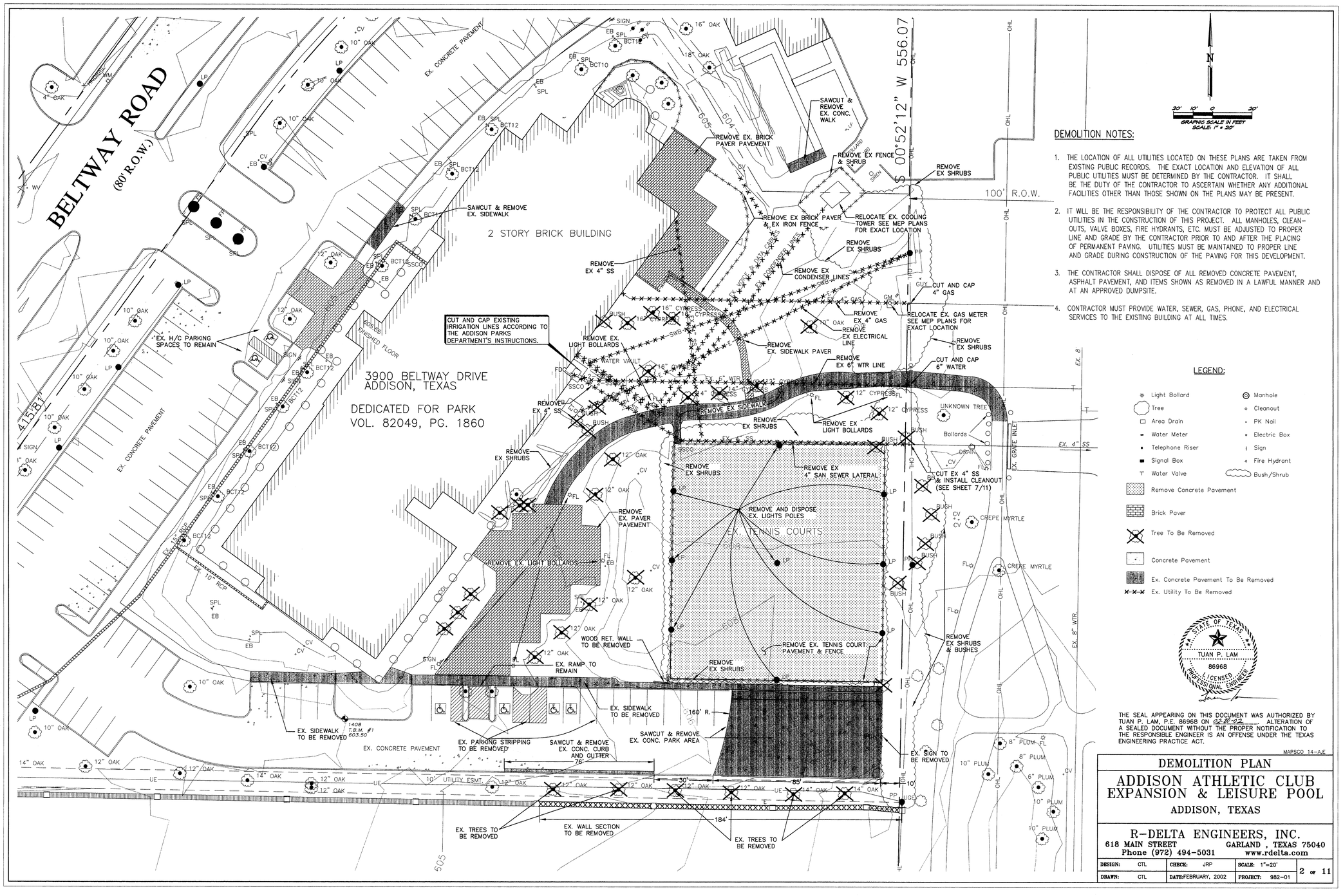

DEMOLITION NOTES:

1. THE LOCATION OF ALL UTILITIES LOCATED ON THESE PLANS ARE TAKEN FROM EXISTING PUBLIC RECORDS. THE EXACT LOCATION AND ELEVATION OF ALL PUBLIC UTILITIES MUST BE DETERMINED BY THE CONTRACTOR. IT SHALL BE THE DUTY OF THE CONTRACTOR TO ASCERTAIN WHETHER ANY ADDITIONAL FACILITIES OTHER THAN THOSE SHOWN ON THE PLANS MAY BE PRESENT.
2. IT WILL BE THE RESPONSIBILITY OF THE CONTRACTOR TO PROTECT ALL PUBLIC UTILITIES IN THE CONSTRUCTION OF THIS PROJECT. ALL MANHOLES, CLEAN-OUTS, VALVE BOXES, FIRE HYDRANTS, ETC. MUST BE ADJUSTED TO PROPER LINE AND GRADE BY THE CONTRACTOR PRIOR TO AND AFTER THE PLACING OF PERMANENT PAVING. UTILITIES MUST BE MAINTAINED TO PROPER LINE AND GRADE DURING CONSTRUCTION OF THE PAVING FOR THIS DEVELOPMENT.
3. THE CONTRACTOR SHALL DISPOSE OF ALL REMOVED CONCRETE PAVEMENT, ASPHALT PAVEMENT, AND ITEMS SHOWN AS REMOVED IN A LAWFUL MANNER AND AT AN APPROVED DUMPSITE.
4. CONTRACTOR MUST PROVIDE WATER, SEWER, GAS, PHONE, AND ELECTRICAL SERVICES TO THE EXISTING BUILDING AT ALL TIMES.

GRAPHIC SCALE IN FEET
SCALE: 1" = 20'

LEGEND:

- Light Bollard
- Tree
- Area Drain
- Water Meter
- Telephone Riser
- Signal Box
- Water Valve
- Remove Concrete Pavement
- Brick Paver
- Tree To Be Removed
- Concrete Pavement
- Ex. Concrete Pavement To Be Removed
- Ex. Utility To Be Removed
- Manhole
- Cleanout
- PK Nail
- Electric Box
- Sign
- Fire Hydrant
- Bush/Shrub

STATE OF TEXAS
TUAN P. LAM
86968
LICENSED PROFESSIONAL ENGINEER

THE SEAL APPEARING ON THIS DOCUMENT WAS AUTHORIZED BY TUAN P. LAM, P.E. 86968 ON 02.20.02 ALTERATION OF A SEALED DOCUMENT WITHOUT THE PROPER NOTIFICATION TO THE RESPONSIBLE ENGINEER IS AN OFFENSE UNDER THE TEXAS ENGINEERING PRACTICE ACT.

MAPSCO 14-A,E

DEMOLITION PLAN

ADDISON ATHLETIC CLUB EXPANSION & LEISURE POOL

ADDISON, TEXAS

R-DELTA ENGINEERS, INC.
618 MAIN STREET GARLAND , TEXAS 75040
Phone (972) 494-5031 www.rdelta.com

DESIGN:	CTL	CHECK:	JRP	SCALE: 1"=20'	2 OF 11
DRAWN:	CTL	DATE: FEBRUARY, 2002		PROJECT: 982-01	

ISSUE DATE
FEB. 20, 2002

REVISIONS

ADDISON ATHLETIC CLUB EXPANSION AND LEISURE POOL
ADDISON, TEXAS

RON HOBBS ARCHITECTS
614 W. MAIN ST. SUITE #200 GARLAND, TEXAS 75040
(972) 494-0174 FAX (972) 494-0722

JOB NUMBER
0012

SHEET NAME
DEMOLITION PLAN

SHEET NUMBER
C102

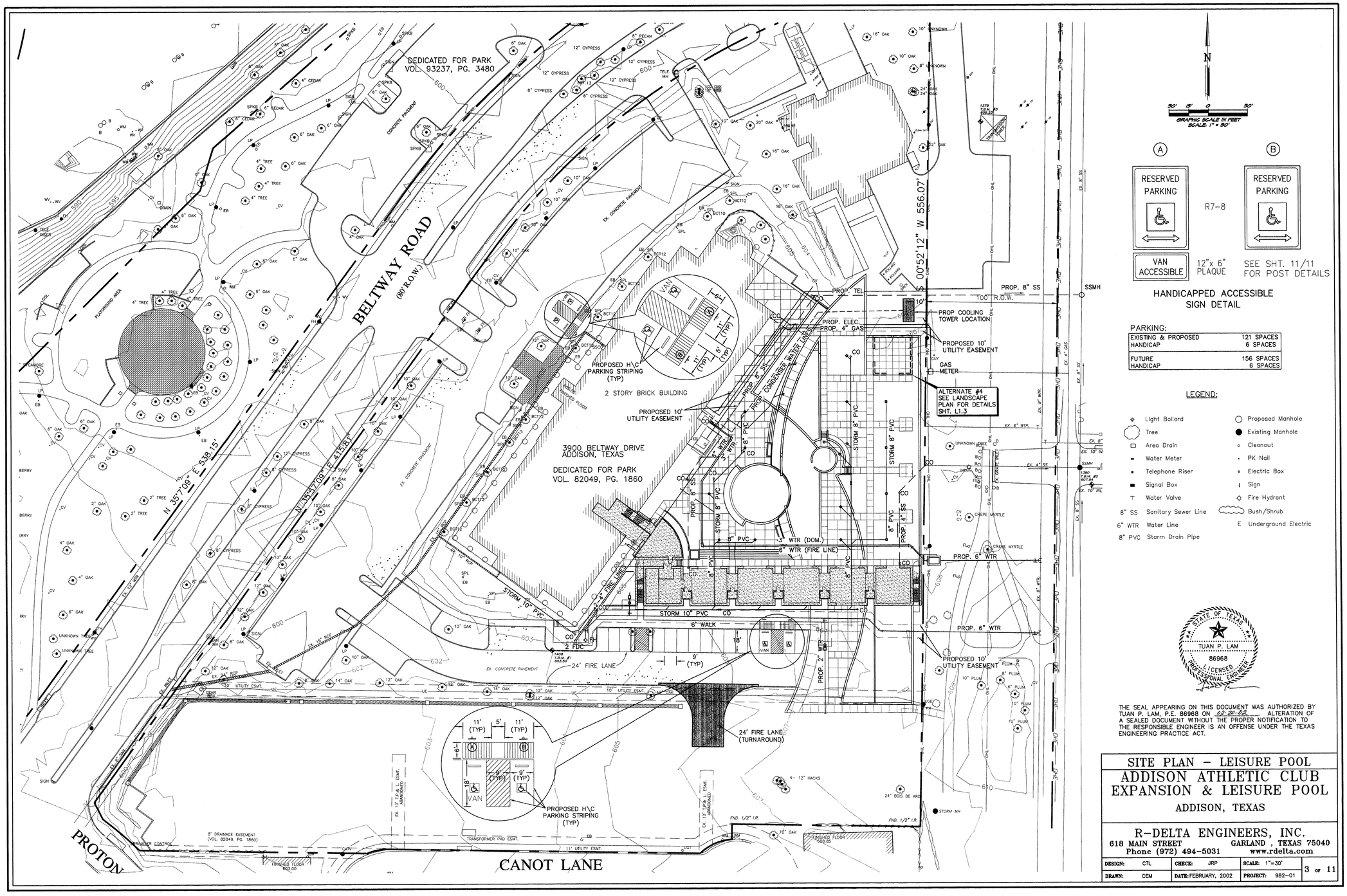

THE SEAL APPEARING ON THIS DOCUMENT WAS AUTHORIZED BY TUAN P. LAM, P.E. 86968 ON 02-20-02 ALTERATION OF A SEALED DOCUMENT WITHOUT THE PROPER NOTIFICATION TO THE RESPONSIBLE ENGINEER IS AN OFFENSE UNDER THE TEXAS ENGINEERING PRACTICE ACT.

SITE PLAN – LEISURE POOL

ADDISON ATHLETIC CLUB EXPANSION & LEISURE POOL

ADDISON, TEXAS

R-DELTA ENGINEERS, INC.
618 MAIN STREET GARLAND , TEXAS 75040
Phone (972) 494-5031 www.rdelta.com

DESIGN: CTL	CHECK: JRP	SCALE: 1"=30'	3 OF 11
DRAWN: CEM	DATE: FEBRUARY, 2002	PROJECT: 982-01	

ISSUE DATE
FEB. 20, 2002

REVISIONS

ADDISON ATHLETIC CLUB EXPANSION
AND
LEISURE POOL
ADDISON, TEXAS

RON HOBBS ARCHITECTS
614 W. MAIN ST. SUITE #200 GARLAND, TEXAS 75040
(972) 494-0174 FAX (972) 494-0722

JOB NUMBER
0012

SHEET NAME
SITE PLAN
LEISURE POOL

SHEET NUMBER
C103

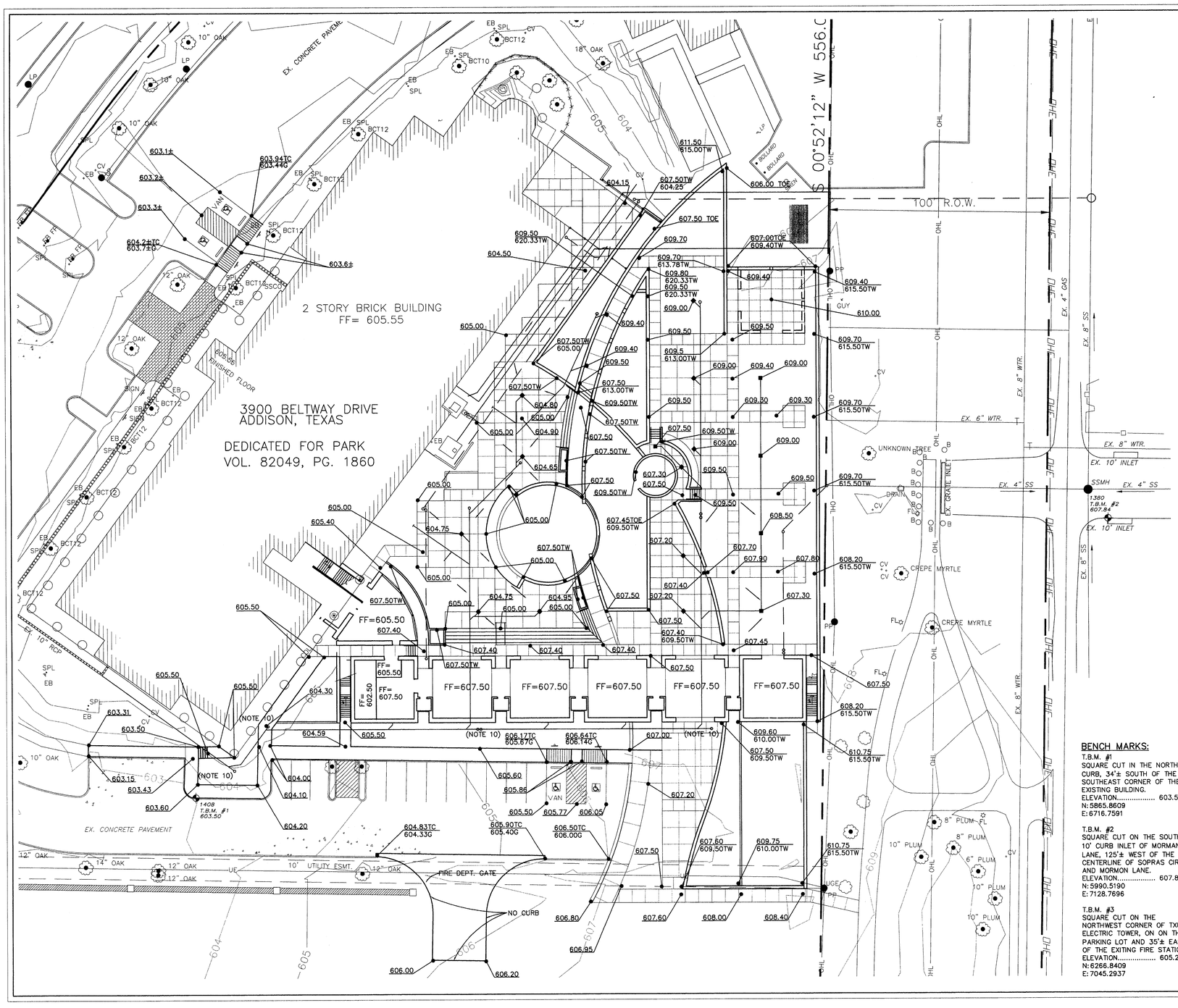

N

20' 10' 0 20'
GRAPHIC SCALE IN FEET
SCALE: 1" = 20'

GRADING NOTES:

1. ALL MATERIALS AND CONSTRUCTION SHALL CONFORM TO THE TOWN OF ADDISON STANDARDS AND SPECIFICATIONS, EXCEPT AS NOTED HEREIN AND APPROVED BY THE TOWN OF ADDISON.
2. CONTRACTOR SHALL BE RESPONSIBLE FOR MAINTAINING TRENCH SAFETY REQUIREMENTS IN ACCORDANCE WITH TOWN STANDARDS, TEXAS LAW, AND O.S.H.A. STANDARDS FOR ALL EXCAVATION IN EXCESS OF FIVE FEET IN DEPTH.
3. THE LOCATION OF ALL UTILITIES LOCATED ON THESE PLANS ARE TAKEN FROM EXISTING PUBLIC RECORDS. THE EXACT LOCATION AND ELEVATION OF ALL PUBLIC UTILITIES MUST BE DETERMINED BY THE CONTRACTOR. IT SHALL BE THE DUTY OF THE CONTRACTOR TO ASCERTAIN WHETHER ANY ADDITIONAL UTILITIES OTHER THAN THOSE SHOWN ON THE PLANS MAY BE PRESENT.
4. IT WILL BE THE RESPONSIBILITY OF THE CONTRACTOR TO PROTECT ALL PUBLIC UTILITIES IN THE CONSTRUCTION OF THIS PROJECT. ALL MANHOLES, CLEAN-OUTS, VALVE BOXES, FIRE HYDRANTS, ETC. MUST BE ADJUSTED TO PROPER LINE AND GRADE BY THE CONTRACTOR PRIOR TO AND AFTER THE PLACING OF PERMANENT PAVING. UTILITIES MUST BE MAINTAINED TO PROPER LINE AND GRADE DURING CONSTRUCTION OF THE PAVING FOR THIS DEVELOPMENT.
5. THE CONTRACTOR SHALL NOTIFY ALL UTILITY COMPANIES 48 HRS. PRIOR TO ANY EXCAVATION ALONG WITH EITHER DIG TESS 1-800-545-6005 OR LONE STAR NOTIFICATION 1-800-669-8344
6. DRAINAGE SHOULD BE MAINTAINED AWAY FROM THE BUILDING FOUNDATIONS, BOTH DURING AND AFTER CONSTRUCTION.
7. BACKFILL FOR UTILITY LINES SHOULD BE PLACED PER GEOTECHNICAL REPORT RECOMMENDATIONS. WHERE UTILITY LINES PASS THROUGH THE PARKING LOT, THE TOP 6" SHOULD BE COMPACTED SIMILARLY TO THE REMAINDER OF THE LOT. UTILITY DITCHES SHOULD BE VISUALLY INSPECTED DURING THE EXCAVATION PROCESS TO ENSURE THAT UNDESIRABLE FILL IS NOT USED.
8. ALL PROPOSED SPOT ELEVATIONS ARE TOP OF PAVEMENT ELEVATIONS UNLESS OTHERWISE SPECIFIED.
9. ALL EARTHWORK OPERATIONS SHALL CONFORM TO THE RECOMMENDATIONS FOUND IN THE GEOTECHNICAL REPORT PREPARED BY FURGO SOUTH, INC., # 0701-1049, DATED APRIL 26, 2001.
10. SET ALL CLEANOUT TOPS FLUSH WITH FINISHED GRADE.

LEGEND:

	Light Bollard		Proposed Manhole
	Tree		Existing Manhole
	Area Drain		Cleanout
	Water Meter		PK Nail
	Telephone Riser		Electric Box
	Signal Box		Sign
	Water Valve		Fire Hydrant
607.80	TOP PAVEMENT		Bush/Shrub
607.50TC	TOP CURB		
607.00G	GUTTER		
607.50TOE	TOE OF WALL		
609.50TW	TOP OF WALL		

BENCH MARKS:

T.B.M. #1
SQUARE CUT IN THE NORTH CURB, 34'± SOUTH OF THE SOUTHEAST CORNER OF THE EXISTING BUILDING.
ELEVATION..... 603.50
N: 5865.8609
E: 6716.7591

T.B.M. #2
SQUARE CUT ON THE SOUTH 10' CURB INLET OF MORMAN LANE, 125'± WEST OF THE CENTERLINE OF SOPRAS CIRCLE AND MORMON LANE.
ELEVATION..... 607.84
N: 5990.5190
E: 7128.7696

T.B.M. #3
SQUARE CUT ON THE NORTHWEST CORNER OF TXU ELECTRIC TOWER, ON ON THE PARKING LOT AND 35'± EAST OF THE EXITING FIRE STATION
ELEVATION..... 605.23
N: 6266.8409
E: 7045.2937

STATE OF TEXAS
TUAN P. LAM
86968
LICENSED PROFESSIONAL ENGINEER

THE SEAL APPEARING ON THIS DOCUMENT WAS AUTHORIZED BY TUAN P. LAM, P.E. 86968 ON 03-20-02 ALTERATION OF A SEALED DOCUMENT WITHOUT THE PROPER NOTIFICATION TO THE RESPONSIBLE ENGINEER IS AN OFFENSE UNDER THE TEXAS ENGINEERING PRACTICE ACT.

GRADING PLAN
ADDISON ATHLETIC CLUB EXPANSION & LEISURE POOL
ADDISON, TEXAS

R-DELTA ENGINEERS, INC.
618 MAIN STREET GARLAND , TEXAS 75040
Phone (972) 494-5031 www.rdelta.com

DESIGN: CTL	CHECK: JRP	SCALE: 1"=20'	4 OF 11
DRAWN: CEM	DATE: FEBRUARY, 2002	PROJECT: 982-01	

ISSUE DATE
FEB. 20, 2002
REVISIONS

ADDISON ATHLETIC CLUB EXPANSION
AND
LEISURE POOL
ADDISON, TEXAS

RON HOBBS ARCHITECTS
614 W. MAIN ST. SUITE #200 GARLAND, TEXAS 75040
(972) 494-0174 FAX (972) 494-0722

JOB NUMBER
0012

SHEET NAME
GRADING PLAN
SHEET NUMBER
C104

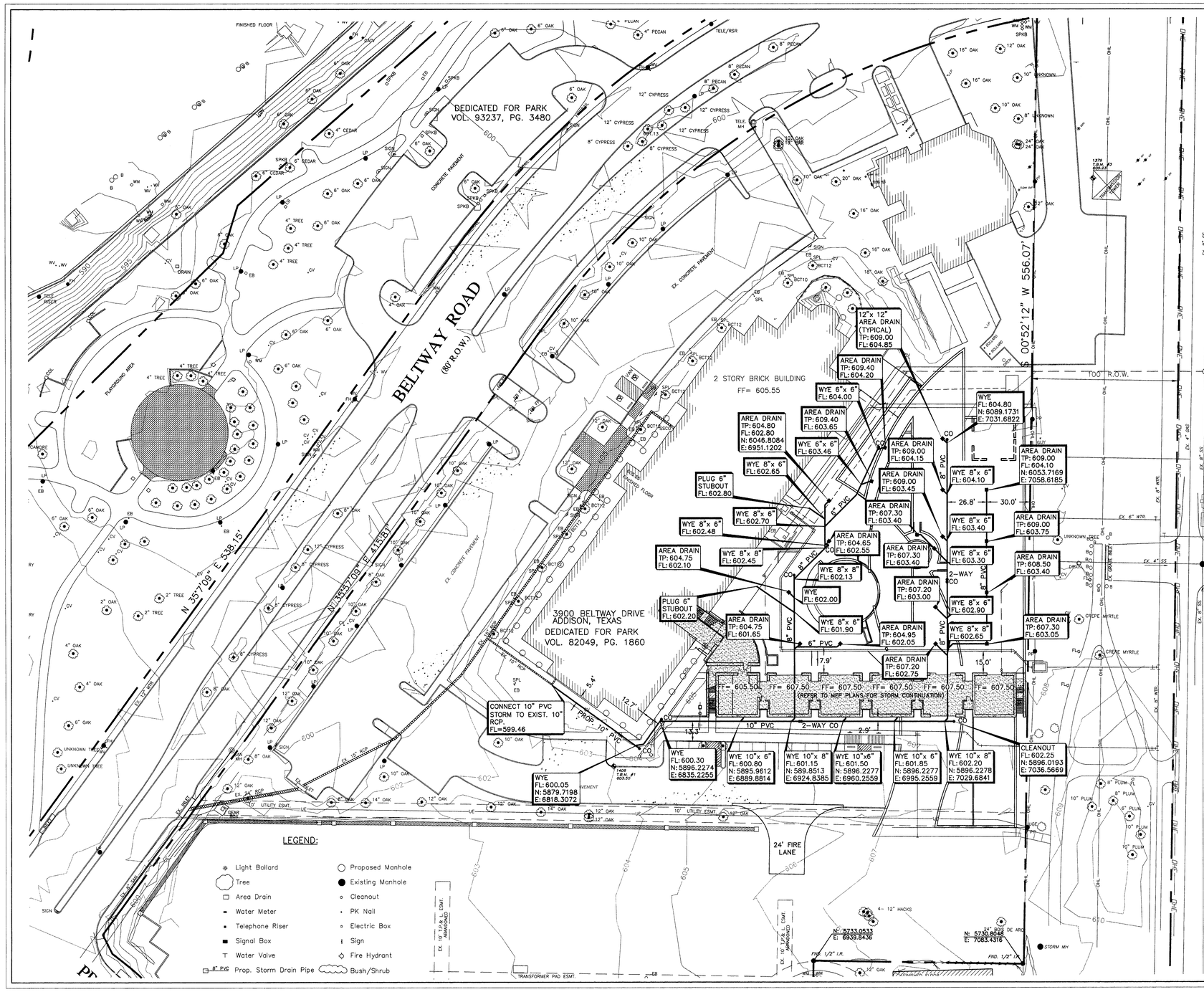

DRAINAGE NOTES:

1. ALL MATERIALS AND CONSTRUCTION SHALL CONFORM TO STANDARD CONSTRUCTION SPECIFICATIONS OF N.C.T.C.O.G., LATEST EDITION & THE TOWN OF ADDISON STANDARDS AND SPECIFICATIONS; EXCEPT AS NOTED HEREIN.
2. ALL STORM SEWER PIPE 18" AND LARGER SHALL BE CLASS III RCP. ALL STORM SEWER PIPE 15" AND SMALLER SHALL BE SDR-35 PVC, ADS N-12 PIPE OR APPROVED EQUAL.
3. CONTRACTOR SHALL BE RESPONSIBLE FOR MAINTAINING TRENCH SAFETY REQUIREMENTS IN ACCORDANCE WITH TOWN STANDARDS, TEXAS STATE LAW, AND O.S.H.A. STANDARDS FOR ALL EXCAVATION IN EXCESS OF FIVE FEET IN DEPTH.
4. CONCRETE FOR INLETS AND DRAINAGE STRUCTURES SHALL BE 3600 PSI AT 28 DAYS.
5. CONSTRUCTION SHALL BEGIN AT DOWNSTREAM END OF PROJECT AND CONTINUE UPSTREAM WITH PIPE GROOVES FACING UPSTREAM.
6. CONTRACTOR SHALL PROTECT ALL PUBLIC UTILITIES IN THE CONSTRUCTION OF THIS PROJECT.
7. THE LOCATION OF ALL UTILITIES INDICATED ON THESE PLANS ARE TAKEN FROM EXISTING PUBLIC RECORDS. THE EXACT LOCATION AND ELEVATION OF ALL PUBLIC UTILITIES MUST BE DETERMINED BY THE CONTRACTOR. IT SHALL BE THE DUTY OF THE CONTRACTOR TO ASCERTAIN WHETHER ANY ADDITIONAL UTILITIES OTHER THAN THOSE SHOWN ON THE PLANS MAY BE PRESENT.
8. IF ROCK IS ENCOUNTERED IN THE TRENCH, ROCK SPOIL SHALL NOT BE USED N THE UPPER 1.5 FEET FOOT OF TRENCH. THE UPPER 1.5 FEET OF THE TRENCH IS TO BE FILLED WITH BACKFILLED MATERIAL PER GEOTECHNICAL REPORT RECOMMENDATIONS.
9. SEE UTILITY PLAN FOR ADDITIONAL INFORMATION RELATED TO OTHER UTILITY CONSTRUCTION.
10. ALL TRENCH BACKFILL FOR STORM SEWER SHALL BE COMPACTED AS REQUIRED BY THE TOWN OF ADDISON CONSTRUCTION STANDARDS AND SPECIFICATIONS & N.C.T.C.O.G.
11. REFER TO LANDSCAPE PLAN FOR AREA DRAINAGE MANUFACTURE & DETAILS.

BENCH MARKS:

T.B.M. #1
SQUARE CUT IN THE NORTH CURB, 34'± SOUTH OF THE SOUTHEAST CORNER OF THE EXISTING BUILDING.
ELEVATION..... 603.50
N: 5865.8609
E: 6716.7591

T.B.M. #2
SQUARE CUT ON THE SOUTH 10' CURB INLET OF MORMAN LANE, 125'± WEST OF THE CENTERLINE OF SOPRAS CIRCLE AND MORMON LANE.
ELEVATION..... 607.84
N: 5990.5190
E: 7128.7696

T.B.M. #3
SQUARE CUT ON THE NORTHWEST CORNER OF TXU ELECTRIC TOWER, ON ON THE PARKING LOT AND 35'± EAST OF THE EXITING FIRE STATION
ELEVATION..... 605.23
N: 6266.8409
E: 7045.2937

STATE OF TEXAS
TUAN P. LAM
86968
LICENSED PROFESSIONAL ENGINEER

THE SEAL APPEARING ON THIS DOCUMENT WAS AUTHORIZED BY TUAN P. LAM, P.E. 86968 ON 02-26-02. ALTERATION OF A SEALED DOCUMENT WITHOUT THE PROPER NOTIFICATION TO THE RESPONSIBLE ENGINEER IS AN OFFENSE UNDER THE TEXAS ENGINEERING PRACTICE ACT.

STORM SEWER PLAN
ADDISON ATHLETIC CLUB EXPANSION & LEISURE POOL
ADDISON, TEXAS

R-DELTA ENGINEERS, INC.
618 MAIN STREET GARLAND , TEXAS 75040
Phone (972) 494-5031 www.rdelta.com

DESIGN: CTL	CHECK: JRP	SCALE: 1"=30'	5 OF 11
DRAWN: CEM	DATE: FEBRUARY, 2002	PROJECT: 982-01	

ISSUE DATE
FEB. 20, 2002
REVISIONS

ADDISON ATHLETIC CLUB EXPANSION AND LEISURE POOL
ADDISON, TEXAS

RON HOBBS ARCHITECTS
614 W. MAIN ST. SUITE #200 GARLAND, TEXAS 75040
(972) 494-0174 FAX (972) 494-0722

JOB NUMBER
0012

SHEET NAME
STORM SEWER PLAN
SHEET NUMBER
C105

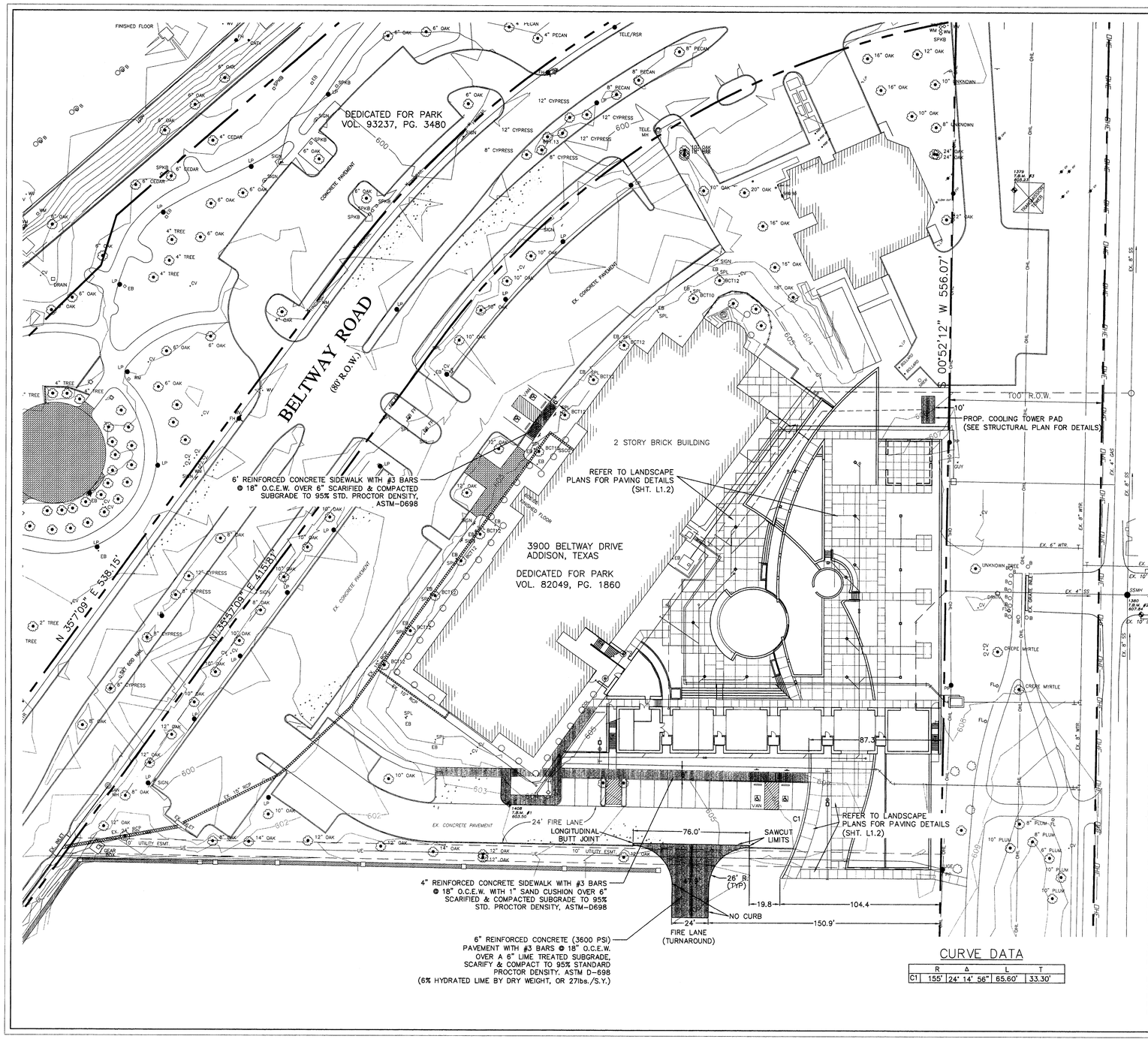

N

GRAPHIC SCALE IN FEET
SCALE: 1" = 30'

PAVING NOTES

1. ALL MATERIALS AND WORKMANSHIP SHALL CONFORM TO THE STANDARD SPECIFICATIONS FOR PUBLIC WORKS CONSTRUCTION AND NCTCOG, LATEST EDITION, AND THE TOWN OF ADDISON STANDARDS AND SPECIFICATIONS, EXCEPT AS NOTED HEREIN.
2. IT SHALL BE THE RESPONSIBILITY OF THE CONTRACTOR TO PROTECT ALL PUBLIC UTILITIES IN THE CONSTRUCTION OF THIS PROJECT. ALL MANHOLES, CLEANOUTS, VALVE BOXES, FIRE HYDRANTS, ETC. MUST BE ADJUSTED TO PROPER LINE AND GRADE BY THE CONTRACTOR PRIOR TO AND AFTER THE PLACING OF PERMANENT PAVING. UTILITIES MUST BE MAINTAINED TO PROPER LINE AND GRADE DURING CONSTRUCTION OF THIS PROJECT.
3. THE CONTRACTOR SHALL BE RESPONSIBLE FOR COORDINATING WITH ALL THE APPROPRIATE UTILITY COMPANIES FOR THE LOCATION OF ALL UTILITIES WITHIN THE CONSTRUCTION AREA.
4. THE PAVING CONTRACTOR SHALL COORDINATE WITH THE UTILITY CONTRACTOR TO INSURE ALL CONDUITS FOR IRRIGATION, ELECTRICAL WATER AND SEWER HAVE BEEN INSTALLED PRIOR TO PLACEMENT OF PERMANENT PAVEMENT. REFER TO LANDSCAPE AND MEP PLANS FOR LOCATION AND SIZE OF PROPOSED CONDUITS.
5. ALL PAVING AND EARTHWORK OPERATIONS SHALL COMPLY WITH THE RECOMMENDATIONS PER THE GEOTECHNICAL REPORT. PREPARED BY FUGRO SOUTH INC. REPORT #0701-1049 DATED 4-26-01.
6. CONCRETE SHALL HAVE A MINIMUM COMPRESSIVE STRENGTH OF 3600 PSI FOR PAVEMENT, AND CURBS IN 28 DAYS. SIDEWALKS (3000 PSI).
7. CONCRETE PAVING SHALL HAVE A CONSTRUCTION JOINT OR SAWED CONTROL JOINT EVERY 15 FEET TRANSVERSELY AND LONGITUDINALLY WITH EXPANSION JOINTS. JOINTS SHALL INTERSECT ALL PAVEMENT EDGES AT 90° INCLUDING RADIUS RETURNS.

LEGEND:

- Light Bollard
- Tree
- Area Drain
- Water Meter
- Telephone Riser
- Signal Box
- Water Valve
- Proposed Manhole
- Existing Manhole
- Cleanout
- PK Nail
- Electric Box
- Sign
- Fire Hydrant
- Bush/Shrub

CURVE DATA

	R	Δ	L	T
C1	155'	24° 14' 56"	65.60'	33.30'

BENCH MARKS:

T.B.M. #1
SQUARE CUT IN THE NORTH CURB, 34'± SOUTH OF THE SOUTHEAST CORNER OF THE EXISTING BUILDING.
ELEVATION..... 603.50
N: 5865.8609
E: 6716.7591

T.B.M. #2
SQUARE CUT ON THE SOUTH 10' CURB INLET OF MORMAN LANE, 125'± WEST OF THE CENTERLINE OF SOPRAS CIRCLE AND MORMON LANE.
ELEVATION..... 607.84
N: 5990.5190
E: 7128.7696

T.B.M. #3
SQUARE CUT ON THE NORTHWEST CORNER OF TXU ELECTRIC TOWER, ON ON THE PARKING LOT AND 35'± EAST OF THE EXITING FIRE STATION
ELEVATION..... 605.23
N: 6266.8409
E: 7045.2937

STATE OF TEXAS
TUAN P. LAM
86968
LICENSED PROFESSIONAL ENGINEER

THE SEAL APPEARING ON THIS DOCUMENT WAS AUTHORIZED BY TUAN P. LAM, P.E. 86968 ON 02-20-02 ALTERATION OF A SEALED DOCUMENT WITHOUT THE PROPER NOTIFICATION TO THE RESPONSIBLE ENGINEER IS AN OFFENSE UNDER THE TEXAS ENGINEERING PRACTICE ACT.

PAVING PLAN
ADDISON ATHLETIC CLUB EXPANSION & LEISURE POOL
ADDISON, TEXAS

R-DELTA ENGINEERS, INC.
618 MAIN STREET GARLAND , TEXAS 75040
Phone (972) 494-5031 www.rdelta.com

DESIGN: CTL	CHECK: JRP	SCALE: 1"=30'	6 OF 11
DRAWN: CEM	DATE: FEBRUARY, 2002	PROJECT: 982-01	

ISSUE DATE
FEB. 20, 2002
REVISIONS

ADDISON ATHLETIC CLUB EXPANSION AND LEISURE POOL
ADDISON, TEXAS

RON HOBBS ARCHITECTS
614 W. MAIN ST. SUITE #200 GARLAND, TEXAS 75040
(972) 494-0174 FAX (972) 494-0722

JOB NUMBER
0012

SHEET NAME
PAVING PLAN
SHEET NUMBER
C106

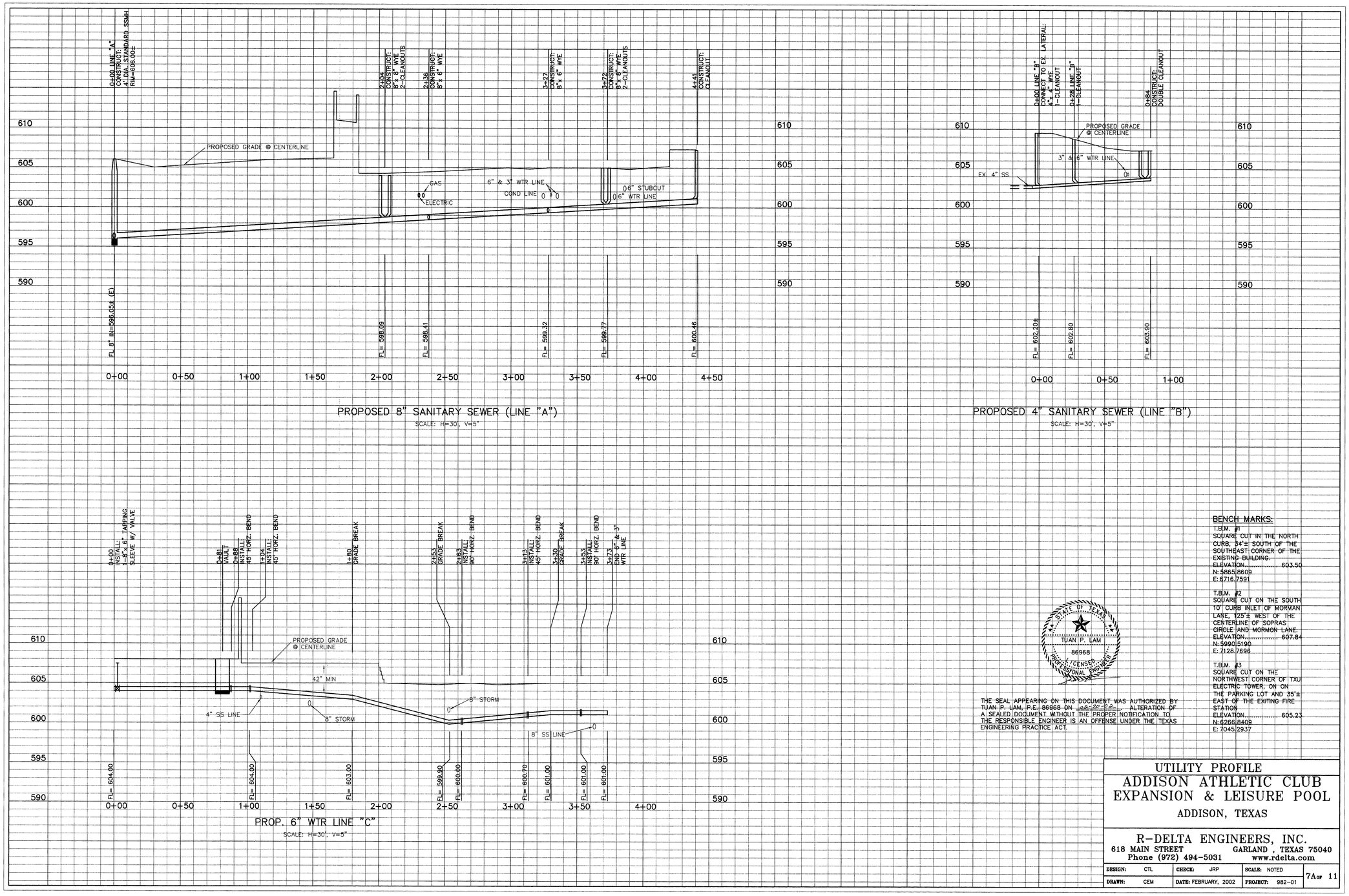

BENCH MARKS:

T.B.M. #1
SQUARE CUT IN THE NORTH CURB, 34'± SOUTH OF THE SOUTHEAST CORNER OF THE EXISTING BUILDING.
ELEVATION..... 603.50
N: 5865.8609
E: 6716.7591

T.B.M. #2
SQUARE CUT ON THE SOUTH 10' CURB INLET OF MORMAN LANE, 125'± WEST OF THE CENTERLINE OF SOPRAS CIRCLE AND MORMON LANE.
ELEVATION..... 607.84
N: 5990.5190
E: 7128.7696

T.B.M. #3
SQUARE CUT ON THE NORTHWEST CORNER OF TXU ELECTRIC TOWER, ON ON THE PARKING LOT AND 35'± EAST OF THE EXITING FIRE STATION
ELEVATION..... 605.23
N: 6266.8409
E: 7045.2937

STATE OF TEXAS
TUAN P. LAM
86968
LICENSED
PROFESSIONAL ENGINEER

THE SEAL APPEARING ON THIS DOCUMENT WAS AUTHORIZED BY TUAN P. LAM, P.E. 86968 ON 02-22-02. ALTERATION OF A SEALED DOCUMENT WITHOUT THE PROPER NOTIFICATION TO THE RESPONSIBLE ENGINEER IS AN OFFENSE UNDER THE TEXAS ENGINEERING PRACTICE ACT.

UTILITY PROFILE
ADDISON ATHLETIC CLUB
EXPANSION & LEISURE POOL
ADDISON, TEXAS

R-DELTA ENGINEERS, INC.
618 MAIN STREET GARLAND , TEXAS 75040
Phone (972) 494-5031 www.rdelta.com

DESIGN: CTL	CHECK: JRP	SCALE: NOTED	7A OF 11
DRAWN: CEM	DATE: FEBRUARY, 2002	PROJECT: 982-01	

ISSUE DATE
FEB. 20, 2002

REVISIONS

ADDISON ATHLETIC CLUB EXPANSION
AND
LEISURE POOL
ADDISON, TEXAS

RON HOBBS ARCHITECTS
614 W. MAIN ST. SUITE #200 GARLAND, TEXAS 75040
(972) 494-0174 FAX (972) 494-0722

JOB NUMBER
0012

SHEET NAME
UTILITY PROFILE PLAN

SHEET NUMBER
C107A

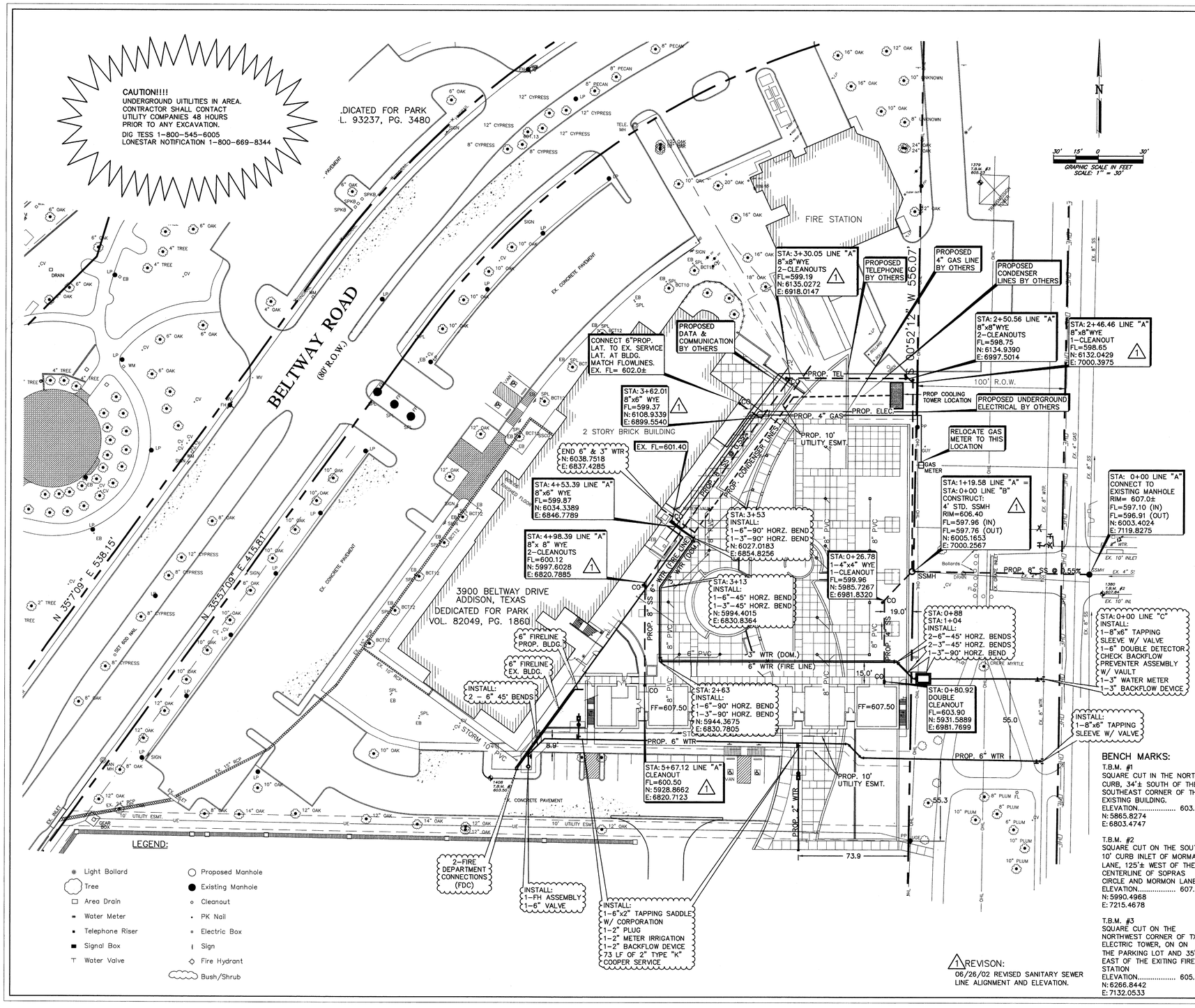

WATER & SANITARY SEWER NOTES:

1. ALL MATERIALS AND CONSTRUCTION SHALL CONFORM TO STANDARD CONSTRUCTION SPECIFICATIONS OF N.C.T.C.O.G., LATEST EDITION & THE TOWN OF ADDISON STANDARDS AND SPECIFICATIONS; EXCEPT AS NOTED HEREIN.
2. CONTRACTOR SHALL BE RESPONSIBLE FOR MAINTAINING TRENCH SAFETY REQUIREMENTS IN ACCORDANCE WITH TOWN STANDARDS, TEXAS STATE LAW, AND O.S.H.A. STANDARDS FOR ALL EXCAVATION IN EXCESS OF FIVE FEET IN DEPTH.
3. THE LOCATION OF ALL UTILITIES LOCATED ON THESE PLANS ARE TAKEN FROM EXISTING PUBLIC RECORDS. THE EXACT LOCATION AND ELEVATION OF ALL PUBLIC UTILITIES MUST BE DETERMINED BY THE CONTRACTOR. IT SHALL BE THE DUTY OF THE CONTRACTOR TO ASCERTAIN WHETHER ANY ADDITIONAL FACILITIES OTHER THAN THOSE SHOWN ON THE PLANS MAY BE PRESENT.
4. IT SHALL BE THE RESPONSIBILITY OF THE CONTRACTOR TO PROTECT ALL PUBLIC UTILITIES IN THE CONSTRUCTION OF THIS PROJECT.
5. ANY WATER & SANITARY SEWER INSTALLED OUTSIDE OF AN EASEMENT SHALL BE INSTALLED BY A LICENSED PLUMBER AND INSPECTED BY CODE ENFORCEMENT.
6. BACKFILL FOR UTILITY LINES SHALL BE COMPACTED TO 95% STANDARD PROCTOR DENSITY WITH 0 TO +3 OPT. MOISTURE. BACKFILL SHALL BE IN 8" MAX. LOOSE LIFTS, NO ROCKS OR CLODS GREATER THAN 3" DIAMETER. WHERE UTILITY LINES CROSS THE PARKING LOT, THE TOP 6" SHOULD BE COMPACTED SIMILARLY TO THE REMAINDER OF THE PARKING LOT.
7. IF ROCK IS ENCOUNTERED IN THE TRENCH, ROCK SPOIL SHALL NOT BE USED IN THE UPPER 1.5 FEET FOOT OF TRENCH. THE UPPER 1.5 FEET OF THE TRENCH IS TO BE FILLED WITH BACKFILLED MATERIAL PER GEOTECHNICAL REPORT RECOMMENDATIONS.
8. ALL WATER LINES SHALL MEET AWWA C909-75, PVC PRESSURE PIPE, PC 150.
9. ALL DUCTILE IRON FITTINGS SHALL BE OF THE MECHANICAL JOINT TYPE AND SHALL BE CLASS D, OR CLASS 250 ON SIZES 12" AND SMALLER IN ACCORDANCE WITH AWWA SPECIFICATION C-110-64 AND C-111-64. ALL FITTINGS WILL BE POLYWRAPPED (8MIL.).
10. ALL WATER MAINS SHALL HAVE A MINIMUM COVER OF 42", OR SUFFICIENT COVER TO CLEAR OTHER UTILITIES AS MEASURED FROM TOP OF PIPE TO EXISTING GROUND LEVEL OR FINISHED GRADE, WHICHEVER IS GREATER.
11. FIRE HYDRANTS SHALL BE PLACED 3' FROM BACK OF CURB LOCATED AS SHOWN ON THE PLANS. GRADE-LOK HYDRANT LEAD.
12. FIRE HYDRANTS SHALL BE TOWN APPROVED.
13. ALL GATE VALVES SHALL BE TOWN APPROVED.
14. ALL WATER AND SANITARY MAINS AND SERVICES SHALL HAVE A 10' MIN. LATERAL SEPARATION. ALL WATER AND SEWER CROSSINGS SHALL COMPLY WITH TEXAS NATURAL RESOURCE CONSERVATION COMMISSION REG.
15. CONCRETE BLOCKING SHALL BE PROVIDED ON WATER MAINS AT ALL TEES, FIRE HYDRANTS, AND BENDS PER TOWN OF ADDISON STANDARDS. PAYMENT FOR CONCRETE BLOCKING SHALL BE SUBSIDIARY TO PIPE INSTALLATION AND SHALL BE INCLUDED IN THE BID PRICE THEREOF IN ADDITION TO RESTRAINING GLANDS - "MEGA-LUG" OR APPROVED EQUAL.
16. EMBEDMENT PVC WATER MAIN SHALL COMPLY WITH THE TOWN DETAILS AND SPECIFICATIONS.
17. ALL WATER METERS TO BE PLACED IN A NON-TRAFFIC AREA.
18. FIRE SPRINKLER LINE SHALL BE SIZED AND INSTALLED BY A STATE LICENSED FIRE SPRINKLER CONTRACTOR.
19. SANITARY SEWER MANHOLES SHALL BE CONSTRUCTED OF CAST-IN-PLACE CONCRETE WITH CAST IRON RING AND COVER PER TOWN OF ADDISON DETAILS.
20. THE SLOPE FOR SANITARY SEWER LATERALS SHALL BE 2%, OR 1/4" PER FOOT, OR AS SHOWN ON PLANS.
21. REFER TO MECHANICAL PLANS FOR EXACT WATER AND SEWER SERVICE LOCATIONS.
22. ALL SANITARY SEWER LINES SHALL MEET ASTM-D 3034, PVC SEWER PIPE DR35 OVER 10' IN DEPTH, USE ASTM D 2241, PVS PIPE, SDR26 (160). PIPE SHALL HAVE INTERGRAL WALL BELL AND SPIGOT JOINTS.
23. ALL WATER SERVICES SHALL BE TYPE "K" COPPER PIPE.

BENCH MARKS:

T.B.M. #1
SQUARE CUT IN THE NORTH CURB, 34'± SOUTH OF THE SOUTHEAST CORNER OF THE EXISTING BUILDING.
ELEVATION..... 603.50
N: 5865.8274
E: 6803.4747

T.B.M. #2
SQUARE CUT ON THE SOUTH 10' CURB INLET OF MORMAN LANE, 125'± WEST OF THE CENTERLINE OF SOPRAS CIRCLE AND MORMON LANE.
ELEVATION..... 607.84
N: 5990.4968
E: 7215.4678

T.B.M. #3
SQUARE CUT ON THE NORTHWEST CORNER OF TXU ELECTRIC TOWER, ON ON THE PARKING LOT AND 35'± EAST OF THE EXITING FIRE STATION
ELEVATION..... 605.23
N: 6266.8442
E: 7132.0533

1 REVISON:
06/26/02 REVISED SANITARY SEWER LINE ALIGNMENT AND ELEVATION.

STATE OF TEXAS
TUAN P. LAM
86968
LICENSED PROFESSIONAL ENGINEER

THE SEAL APPEARING ON THIS DOCUMENT WAS AUTHORIZED BY TUAN P. LAM, P.E. 86968 ON 06-26-02. ALTERATION OF A SEALED DOCUMENT WITHOUT THE PROPER NOTIFICATION TO THE RESPONSIBLE ENGINEER IS AN OFFENSE UNDER THE TEXAS ENGINEERING PRACTICE ACT.

WATER & SANITARY SEWER PLAN
ADDISON ATHLETIC CLUB EXPANSION & LEISURE POOL
ADDISON, TEXAS

R-DELTA ENGINEERS, INC.
618 MAIN STREET GARLAND , TEXAS 75040
Phone (972) 494-5031 www.rdelta.com

DESIGN: CTL	CHECK: JRP	SCALE: 1"=30'	7 OF 11
DRAWN: CEM	DATE: FEBRUARY, 2002	PROJECT: 982-01	

ISSUE DATE
FEB. 20, 2002
REVISIONS

ADDISON ATHLETIC CLUB EXPANSION AND LEISURE POOL
ADDISON, TEXAS

RON HOBBS ARCHITECTS
614 W. MAIN ST. SUITE #200 GARLAND, TEXAS 75040
(972) 494-0174 FAX (972) 494-0722

JOB NUMBER
0012

SHEET NAME
WATER & SANITARY SEWER PLAN
SHEET NUMBER
C107

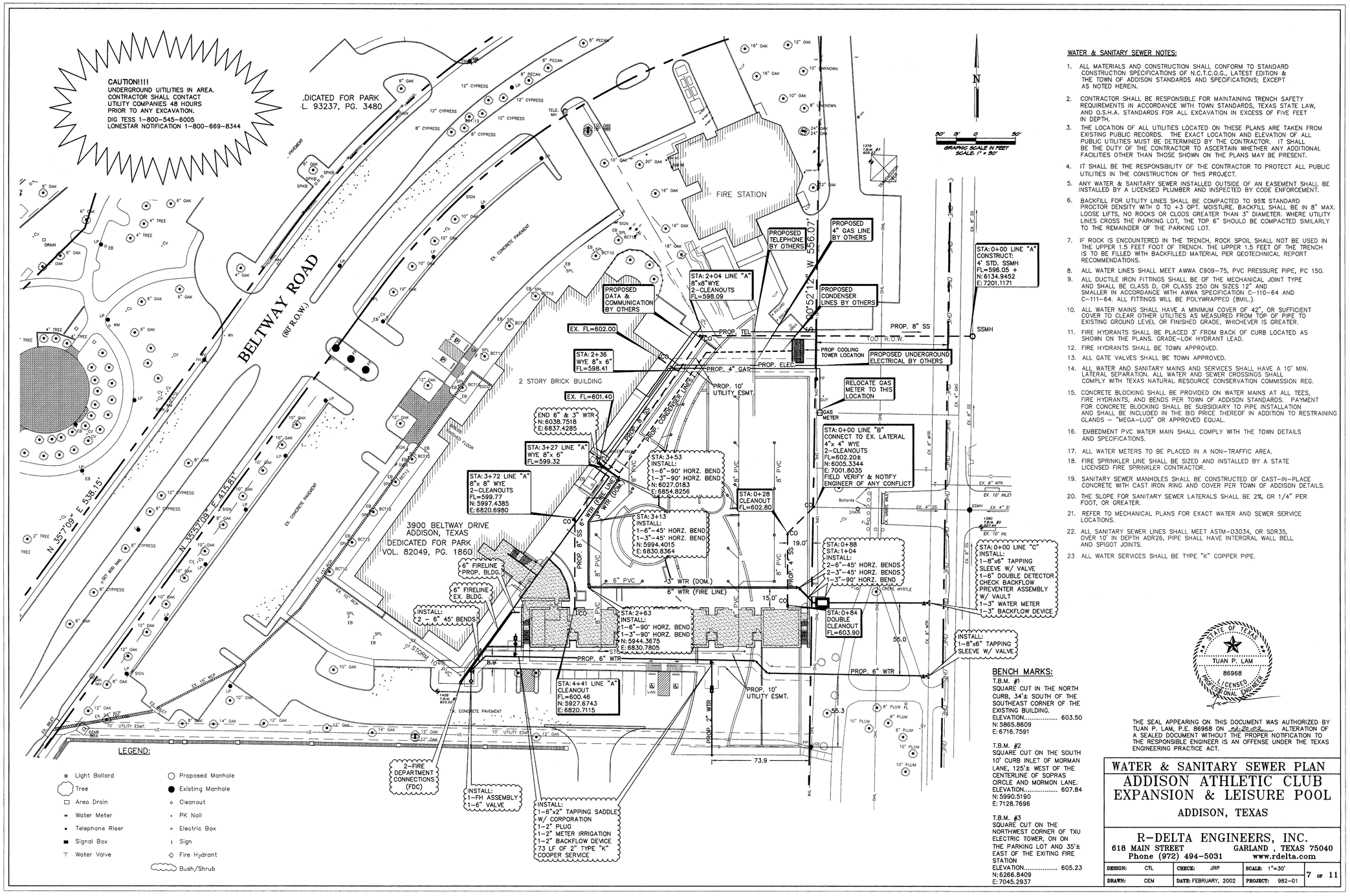

WATER & SANITARY SEWER NOTES:

1. ALL MATERIALS AND CONSTRUCTION SHALL CONFORM TO STANDARD CONSTRUCTION SPECIFICATIONS OF N.C.T.C.O.G., LATEST EDITION & THE TOWN OF ADDISON STANDARDS AND SPECIFICATIONS; EXCEPT AS NOTED HEREIN.
2. CONTRACTOR SHALL BE RESPONSIBLE FOR MAINTAINING TRENCH SAFETY REQUIREMENTS IN ACCORDANCE WITH TOWN STANDARDS, TEXAS STATE LAW, AND O.S.H.A. STANDARDS FOR ALL EXCAVATION IN EXCESS OF FIVE FEET IN DEPTH.
3. THE LOCATION OF ALL UTILITIES LOCATED ON THESE PLANS ARE TAKEN FROM EXISTING PUBLIC RECORDS. THE EXACT LOCATION AND ELEVATION OF ALL PUBLIC UTILITIES MUST BE DETERMINED BY THE CONTRACTOR. IT SHALL BE THE DUTY OF THE CONTRACTOR TO ASCERTAIN WHETHER ANY ADDITIONAL FACILITIES OTHER THAN THOSE SHOWN ON THE PLANS MAY BE PRESENT.
4. IT SHALL BE THE RESPONSIBILITY OF THE CONTRACTOR TO PROTECT ALL PUBLIC UTILITIES IN THE CONSTRUCTION OF THIS PROJECT.
5. ANY WATER & SANITARY SEWER INSTALLED OUTSIDE OF AN EASEMENT SHALL BE INSTALLED BY A LICENSED PLUMBER AND INSPECTED BY CODE ENFORCEMENT.
6. BACKFILL FOR UTILITY LINES SHALL BE COMPACTED TO 95% STANDARD PROCTOR DENSITY WITH 0 TO +3 OPT. MOISTURE. BACKFILL SHALL BE IN 8" MAX. LOOSE LIFTS, NO ROCKS OR CLODS GREATER THAN 3" DIAMETER. WHERE UTILITY LINES CROSS THE PARKING LOT, THE TOP 6" SHOULD BE COMPACTED SIMILARLY TO THE REMAINDER OF THE PARKING LOT.
7. IF ROCK IS ENCOUNTERED IN THE TRENCH, ROCK SPOIL SHALL NOT BE USED IN THE UPPER 1.5 FEET FOOT OF TRENCH. THE UPPER 1.5 FEET OF THE TRENCH IS TO BE FILLED WITH BACKFILLED MATERIAL PER GEOTECHNICAL REPORT RECOMMENDATIONS.
8. ALL WATER LINES SHALL MEET AWWA C909-75, PVC PRESSURE PIPE, PC 150.
9. ALL DUCTILE IRON FITTINGS SHALL BE OF THE MECHANICAL JOINT TYPE AND SHALL BE CLASS D, OR CLASS 250 ON SIZES 12" AND SMALLER IN ACCORDANCE WITH AWWA SPECIFICATION C-110-64 AND C-111-64. ALL FITTINGS WILL BE POLYWRAPPED (BMIL.).
10. ALL WATER MAINS SHALL HAVE A MINIMUM COVER OF 42", OR SUFFICIENT COVER TO CLEAR OTHER UTILITIES AS MEASURED FROM TOP OF PIPE TO EXISTING GROUND LEVEL OR FINISHED GRADE, WHICHEVER IS GREATER.
11. FIRE HYDRANTS SHALL BE PLACED 3' FROM BACK OF CURB LOCATED AS SHOWN ON THE PLANS. GRADE-LOK HYDRANT LEAD.
12. FIRE HYDRANTS SHALL BE TOWN APPROVED.
13. ALL GATE VALVES SHALL BE TOWN APPROVED.
14. ALL WATER AND SANITARY MAINS AND SERVICES SHALL HAVE A 10' MIN. LATERAL SEPARATION. ALL WATER AND SEWER CROSSINGS SHALL COMPLY WITH TEXAS NATURAL RESOURCE CONSERVATION COMMISSION REG.
15. CONCRETE BLOCKING SHALL BE PROVIDED ON WATER MAINS AT ALL TEES, FIRE HYDRANTS, AND BENDS PER TOWN OF ADDISON STANDARDS. PAYMENT FOR CONCRETE BLOCKING SHALL BE SUBSIDIARY TO PIPE INSTALLATION AND SHALL BE INCLUDED IN THE BID PRICE THEREOF IN ADDITION TO RESTRAINING GLANDS – "MEGA-LUG" OR APPROVED EQUAL.
16. EMBEDMENT PVC WATER MAIN SHALL COMPLY WITH THE TOWN DETAILS AND SPECIFICATIONS.
17. ALL WATER METERS TO BE PLACED IN A NON-TRAFFIC AREA.
18. FIRE SPRINKLER LINE SHALL BE SIZED AND INSTALLED BY A STATE LICENSED FIRE SPRINKLER CONTRACTOR.
19. SANITARY SEWER MANHOLES SHALL BE CONSTRUCTED OF CAST-IN-PLACE CONCRETE WITH CAST IRON RING AND COVER PER TOWN OF ADDISON DETAILS.
20. THE SLOPE FOR SANITARY SEWER LATERALS SHALL BE 2%, OR 1/4" PER FOOT, OR GREATER.
21. REFER TO MECHANICAL PLANS FOR EXACT WATER AND SEWER SERVICE LOCATIONS.
22. ALL SANITARY SEWER LINES SHALL MEET ASTM-D3034, OR SDR35, OVER 10' IN DEPTH ADR26, PIPE SHALL HAVE INTERGRAL WALL BELL AND SPIGOT JOINTS.
23. ALL WATER SERVICES SHALL BE TYPE "K" COPPER PIPE.

BENCH MARKS:

T.B.M. #1
SQUARE CUT IN THE NORTH CURB, 34'± SOUTH OF THE SOUTHEAST CORNER OF THE EXISTING BUILDING.
ELEVATION..... 603.50
N: 5865.8609
E: 6716.7591

T.B.M. #2
SQUARE CUT ON THE SOUTH 10' CURB INLET OF MORMAN LANE, 125'± WEST OF THE CENTERLINE OF SOPRAS CIRCLE AND MORMON LANE.
ELEVATION..... 607.84
N: 5990.5190
E: 7128.7696

T.B.M. #3
SQUARE CUT ON THE NORTHWEST CORNER OF TXU ELECTRIC TOWER, ON ON THE PARKING LOT AND 35'± EAST OF THE EXITING FIRE STATION
ELEVATION..... 605.23
N: 6266.8409
E: 7045.2937

STATE OF TEXAS
TUAN P. LAM
86968
LICENSED PROFESSIONAL ENGINEER

THE SEAL APPEARING ON THIS DOCUMENT WAS AUTHORIZED BY TUAN P. LAM, P.E. 86968 ON 02-20-02. ALTERATION OF A SEALED DOCUMENT WITHOUT THE PROPER NOTIFICATION TO THE RESPONSIBLE ENGINEER IS AN OFFENSE UNDER THE TEXAS ENGINEERING PRACTICE ACT.

WATER & SANITARY SEWER PLAN
ADDISON ATHLETIC CLUB EXPANSION & LEISURE POOL
ADDISON, TEXAS

R-DELTA ENGINEERS, INC.
618 MAIN STREET GARLAND , TEXAS 75040
Phone (972) 494-5031 www.rdelta.com

DESIGN: CTL	CHECK: JRP	SCALE: 1"=30'		7 OF 11
DRAWN: CEM	DATE: FEBRUARY, 2002	PROJECT: 982-01		

ISSUE DATE
FEB. 20, 2002
REVISIONS

ADDISON ATHLETIC CLUB EXPANSION AND LEISURE POOL
ADDISON, TEXAS

RON HOBBS ARCHITECTS
614 W. MAIN ST. SUITE #200 GARLAND, TEXAS 75040
(972) 494-0174 FAX (972) 494-0722

JOB NUMBER
0012

SHEET NAME
WATER & SANITARY SEWER PLAN
SHEET NUMBER
C107

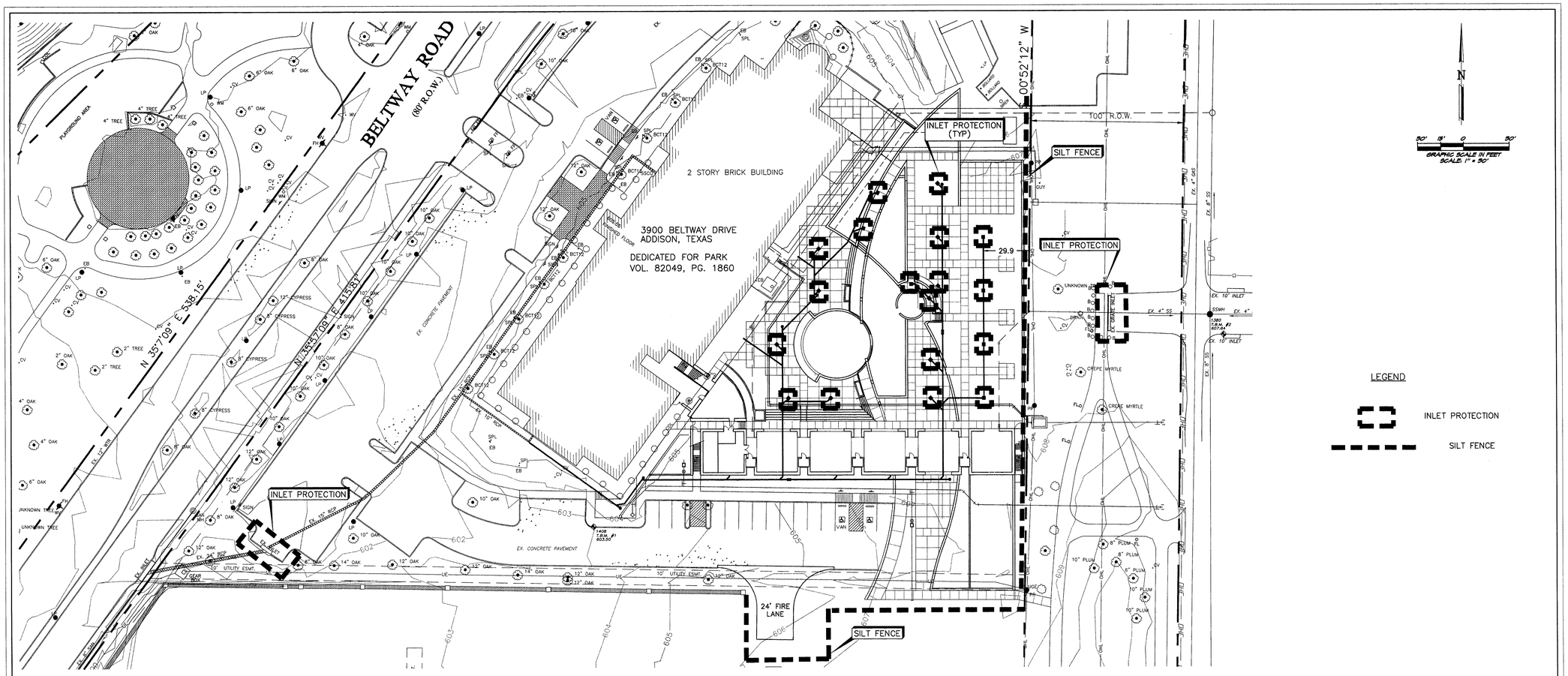

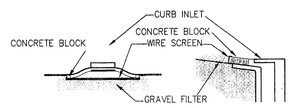

CURB INLET PROTECTION

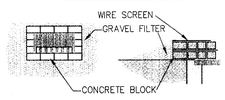

DROP INLET PROTECTION

BLOCK AND GRAVEL PROTECTION CONCRETE BLOCKS ARE TO BE PLACED ON THEIR SIDES IN A SINGLE ROW AROUND THE PERIMETER OF THE INLET, WITH ENDS ABUTTING. OPENING IN THE BLOCKS SHOULD FACE OUTWARD, NOT UPWARD. WIRE MESH SHALL THEN BE PLACED OVER THE OUTSIDE FACE OF THE BLOCKS COVERING THE HOLES. FILTER STONE SHALL THEN BE PILED AGAINST THE WIRE MESH TO THE TOP OF THE BLOCKS WITH THE BASE OF THE STONE BEING A MINIMUM OF 18 INCHES FROM THE BLOCKS. PERIODICALLY, WHEN THE STONE FILTER BECOMES CLOGGED, THE STONE MUST BE REMOVED AND CLEANED IN A PROPER MANNER OR REPLACED WITH NEW STONE AND PILED BACK AGAINST THE WIRE MESH.

4' (1.2 m) MIN. STEEL OR WOOD POSTS SPACED AT 5' (1.8 m) TO 8' (2.4 m) SOFTWOOD POSTS SHALL BE 3" (7.6 cm) MIN. IN. DIA. OR NOMINAL 2"x4" (5.1 cm x 10.2 cm). HARDWOOD POSTS SHALL HAVE A MIN. CROSS SECTION OF 1.5"x1.5" (3.8 cm x 3.8 cm).

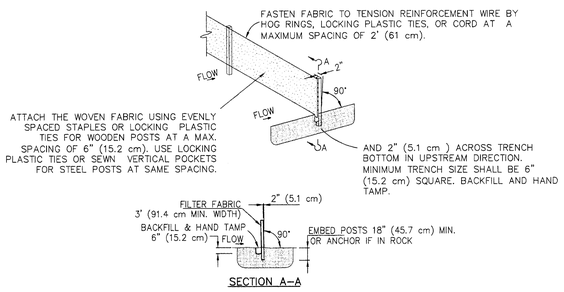

SECTION A–A

SILT FENCE

CONSTRUCTION NOTES – SILT FENCE

1. POSTS WHICH SUPPORT THE SILT FENCE SHALL BE INSTALLED ON A SLIGHT ANGLE TOWARD THE ANTICIPATED RUNOFF SOURCE. THE POST MUST BE EMBEDDED A MINIMUM OF 18 INCHES.
2. THE TOE OF THE SILT FENCE SHALL BE TRENCHED IN WITH A SPADE OR MECHANICAL TRENCHER, SO THAT THE DOWNSLOPE FACE OF THE TRENCH IS FLAT AND PERPENDICULAR TO THE LINE OF FLOW. WHERE FENCE CANNOT BE TRENCHED IN (E.G. PAVEMENT), WEIGHT FABRIC FLAP WITH WASHED GRAVEL ON THE UPHILL SIDE TO PREVENT FLOW UNDER FENCE.
3. THE TRENCH MUST BE A MINIMUM OF 6 INCHES DEEP AND 6 INCHES WIDE TO ALLOW FOR THE SILT FENCE FABRIC TO BE LAID IN THE GROUND AND BACKFILLED WITH COMPACTED MATERIAL.
4. SILT FENCE SHALL BE SECURELY FASTENED TO EACH SUPPORT POST OR TO WOVEN WIRE, WHICH IS IN TURN ATTACHED TO THE SUPPORT POST. THERE SHALL BE A 6 INCH DOUBLE OVERLAP, SECURELY FASTENED WHERE ENDS OF FABRIC MEET.
5. INSPECTION SHALL BE MADE WEEKLY OR AFTER EACH RAINFALL. REPAIR OR REPLACEMENT SHALL BE MADE PROMPTLY AS NEEDED.
6. SILT FENCE SHALL BE REMOVED WHEN THE SITE IS COMPLETELY STABILIZED SO AS NOT TO BLOCK OR IMPEDE STORM FLOW OR DRAINAGE.
7. ACCUMULATED SILT SHALL BE REMOVED WHEN IT REACHES A DEPTH OF 6 INCHES. THE SILT SHALL BE DISPOSED OF AT AN APPROVED SITE AND IN SUCH A MANNER AS TO NOT CONTRIBUTE TO ADDITIONAL SILTATION.

NOTES:

THE CONTRACTOR SHALL PROVIDE ANY ADDITIONAL EROSION OR POLLUTION CONTROL DEVICES AS REQUIRED DURING THE CONSTRUCTION PHASE IN ORDER TO COMPLETELY CONFORM TO THE UNITED STATES ENVIRONMENTAL PROTECTION AGENCY AND ALL OTHER AGENCIES HAVING JURISDICTION. CONTRACTOR AND OWNER SHALL FILE N.O.I. PER EPA REQUIREMENTS.

STATE OF TEXAS
TUAN P. LAM
86968
LICENSED PROFESSIONAL ENGINEER

THE SEAL APPEARING ON THIS DOCUMENT WAS AUTHORIZED BY TUAN P. LAM, P.E. 86968 ON 02-20-02. ALTERATION OF A SEALED DOCUMENT WITHOUT THE PROPER NOTIFICATION TO THE RESPONSIBLE ENGINEER IS AN OFFENSE UNDER THE TEXAS ENGINEERING PRACTICE ACT.

EROSION CONTROL PLAN
ADDISON ATHLETIC CLUB EXPANSION & LEISURE POOL
ADDISON, TEXAS

R–DELTA ENGINEERS, INC.
618 MAIN STREET GARLAND , TEXAS 75040
Phone (972) 494–5031 www.rdelta.com

DESIGN: CTL	CHECK: JRP	SCALE: 1"=30'	8 OF 11
DRAWN: CEM	DATE: FEBRUARY, 2002	PROJECT: 982-01	

ISSUE DATE
FEB. 20, 2002
REVISIONS

ADDISON ATHLETIC CLUB EXPANSION
AND
LEISURE POOL
ADDISON, TEXAS

RON HOBBS ARCHITECTS
614 W. MAIN ST. SUITE #200 GARLAND, TEXAS 75040
(972) 494-0174 FAX (972) 494-0722

JOB NUMBER
0012

SHEET NAME
EROSION CONTROL PLAN
SHEET NUMBER
C108

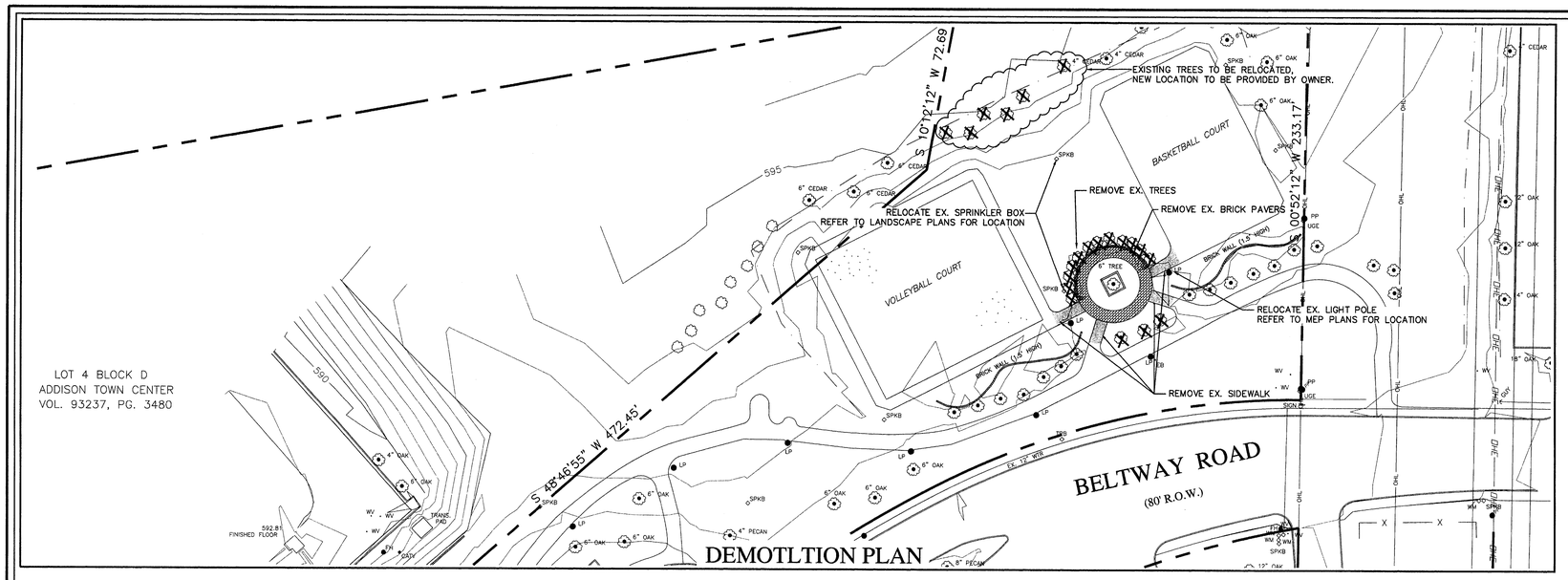

DEMOTLTION PLAN

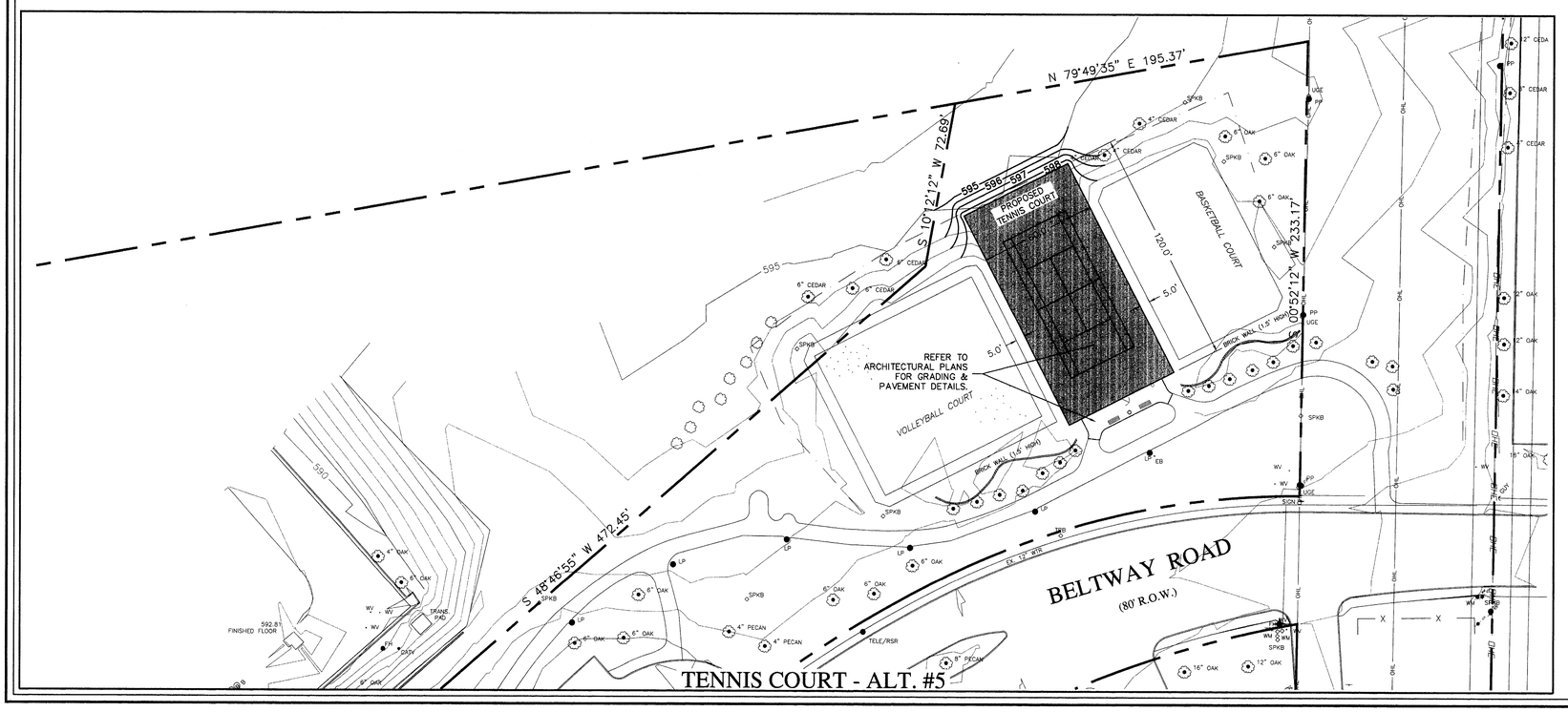

TENNIS COURT - ALT. #5

N

GRAPHIC SCALE IN FEET
SCALE: 1" = 30'

LEGEND:

Light Bollard	Proposed Manhole
Tree	Existing Manhole
Area Drain	Cleanout
Water Meter	PK Nail
Telephone Riser	Electric Box
Signal Box	Sign
Water Valve	Fire Hydrant
8" SS Sanitary Sewer Line	Bush/Shrub
6" WTR Water Line	E Underground Electric
8" PVC Storm Drain Pipe	Ex. Tree To Be Removed

STATE OF TEXAS
TUAN P. LAM
86968
LICENSED PROFESSIONAL ENGINEER

THE SEAL APPEARING ON THIS DOCUMENT WAS AUTHORIZED BY TUAN P. LAM, P.E. 86968 ON 02-20-02. ALTERATION OF A SEALED DOCUMENT WITHOUT THE PROPER NOTIFICATION TO THE RESPONSIBLE ENGINEER IS AN OFFENSE UNDER THE TEXAS ENGINEERING PRACTICE ACT.

TENNIS COURT ALT. # 5

ADDISON ATHLETIC CLUB EXPANSION & LEISURE POOL

ADDISON, TEXAS

R-DELTA ENGINEERS, INC.
618 MAIN STREET GARLAND , TEXAS 75040
Phone (972) 494-5031 www.rdelta.com

DESIGN: CTL	CHECK: JRP	SCALE: 1"=30'	9 OF 11
DRAWN: CEM	DATE: FEBRUARY, 2002	PROJECT: 982-01	

ISSUE DATE
FEB. 20, 2002

REVISIONS

ADDISON ATHLETIC CLUB EXPANSION
AND
LEISURE POOL
ADDISON, TEXAS

RON HOBBS ARCHITECTS
614 W. MAIN ST. SUITE #200 GARLAND, TEXAS 75040
(972) 494-0174 FAX (972) 494-0722

JOB NUMBER
0012

SHEET NAME
ALTERNATE "A"
TENNIS COURT

SHEET NUMBER
C109

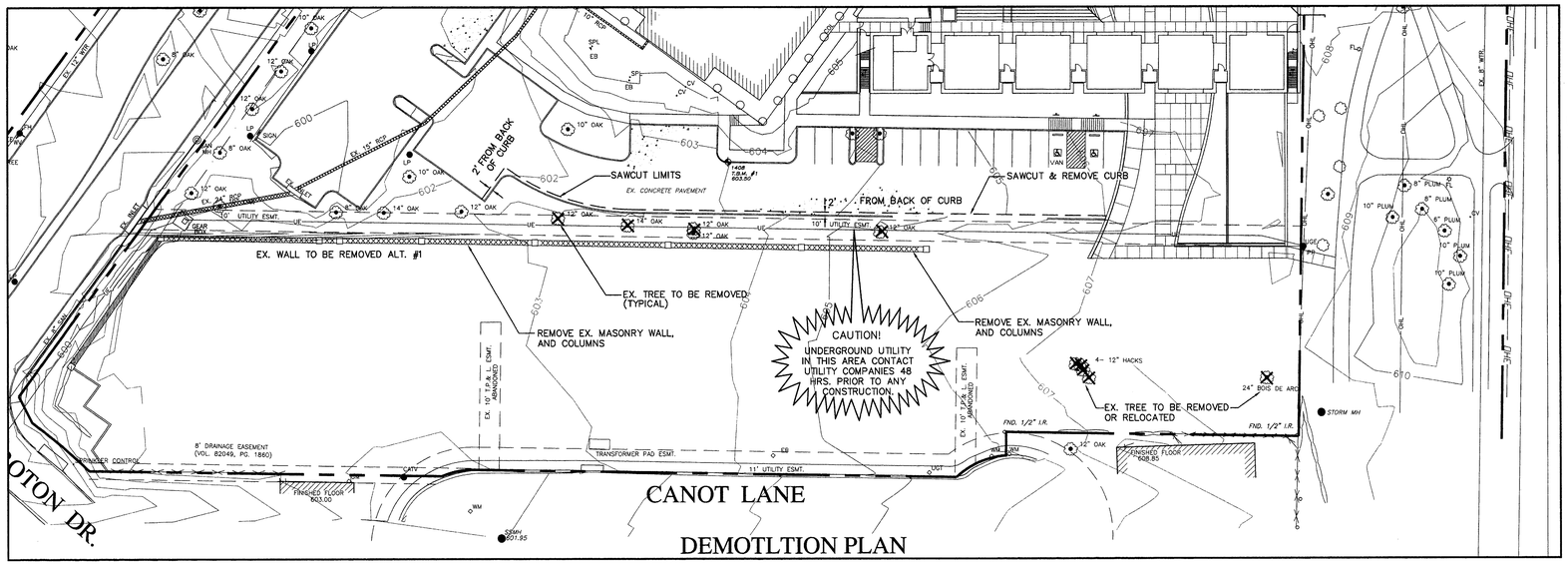

DEMOTLTION PLAN

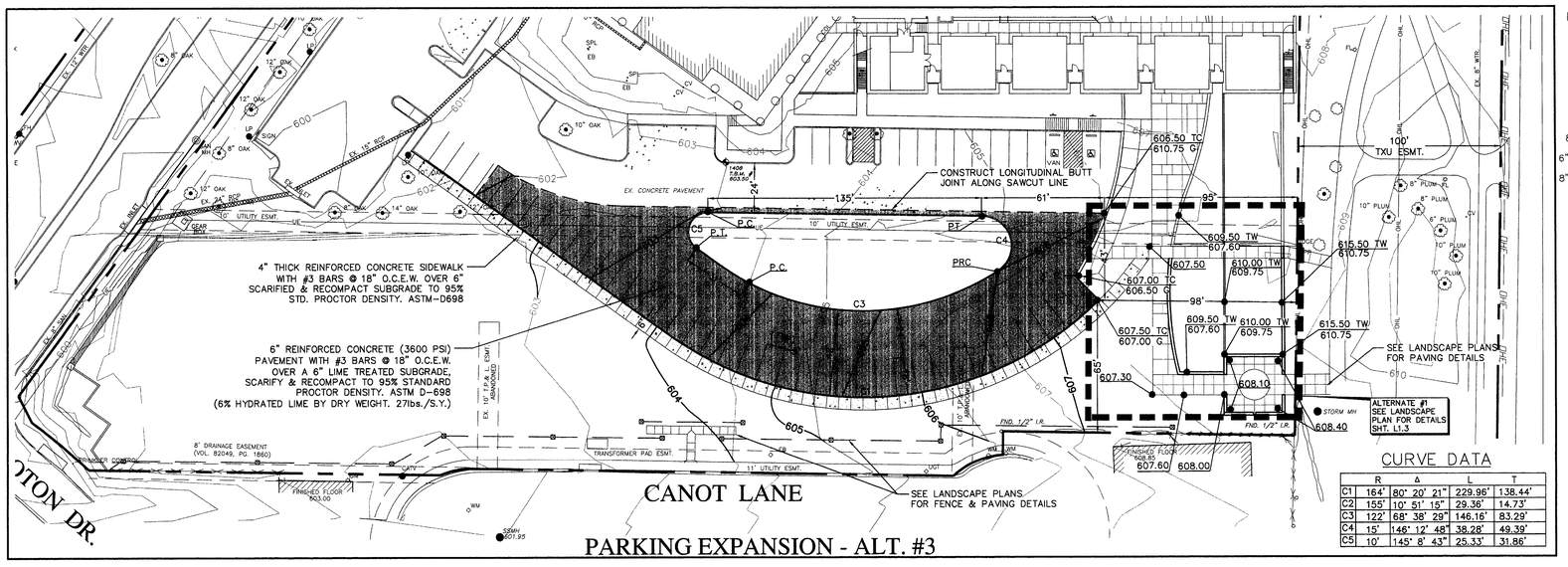

PARKING EXPANSION - ALT. #3

CURVE DATA

	R	Δ	L	T
C1	164'	80° 20' 21"	229.96'	138.44'
C2	155'	10° 51' 15"	29.36'	14.73'
C3	122'	68° 38' 29"	146.16'	83.29'
C4	15'	146° 12' 48"	38.28'	49.39'
C5	10'	145° 8' 43"	25.33'	31.86'

N

GRAPHIC SCALE IN FEET
SCALE: 1" = 30'

PAVING NOTES

1. ALL MATERIALS AND WORKMANSHIP SHALL CONFORM TO THE STANDARD SPECIFICATIONS FOR PUBLIC WORKS CONSTRUCTION AND N.C.T.C.O.G., LATEST EDITION, AND THE TOWN OF ADDISON STANDARDS AND SPECIFICATIONS.
2. IT SHALL BE THE RESPONSIBILITY OF THE CONTRACTOR TO PROTECT ALL PUBLIC UTILITIES IN THE CONSTRUCTION OF THIS PROJECT. ALL MANHOLES, CLEANOUTS, VALVE BOXES, FIRE HYDRANTS, ETC. MUST BE ADJUSTED TO PROPER LINE AND GRADE BY THE CONTRACTOR PRIOR TO AND AFTER THE PLACING OF PERMANENT PAVING. UTILITIES MUST BE MAINTAINED TO PROPER LINE AND GRADE DURING CONSTRUCTION OF THIS PROJECT.
3. THE CONTRACTOR SHALL BE RESPONSIBLE FOR COORDINATING WITH ALL THE APPROPRIATE UTILITY COMPANIES FOR THE LOCATION OF ALL UTILITIES WITHIN THE CONSTRUCTION AREA.
4. THE PAVING CONTRACTOR SHALL COORDINATE WITH THE UTILITY CONTRACTOR TO INSURE ALL CONDUIT FOR IRRIGATION, ELECTRICAL WATER AND SEWER HAS BEEN INSTALLED PRIOR TO PLACEMENT OF PERMANENT PAVEMENT. REFER TO LANDSCAPE AND MEP PLANS FOR LOCATION AND SIZE.
5. ALL PAVING AND EARTHWORK OPERATIONS SHALL COMPLY WITH THE RECOMMENDATIONS PER THE GEOTECHNICAL REPORT. PREPARED BY FUGRO SOUTH INC. REPORT #0701-1049 DATED 4-26-01.
6. TRAFFIC BARRICADES WILL BE REQUIRED FOR PAVING AND STORM SEWER CONSTRUCTION WITHIN THE PUBLIC RIGHT-OF-WAY. BARRICADES SHALL CONFORM TO THE INSTALLATION SHOWN IN THE "1980 TEXAS MANUAL OF UNIFORM TRAFFIC CONTROL DEVICES," AS CURRENTLY AMENDED, TEXAS DEPARTMENT OF TRANSPORTATION.
7. CONCRETE SHALL HAVE A MINIMUM COMPRESSIVE STRENGTH OF 3600 PSI FOR PAVEMENT, CURBS AND SIDEWALK IN 28 DAYS.
8. CONCRETE PAVING SHALL HAVE A CONSTRUCTION JOINT OR SAWED CONTROL JOINT EVERY 15 FEET TRANSVERSELY AND LONGITUDINALLY WITH EXPANSION JOINTS AS SHOWN IN THE DRAWINGS. JOINTS SHALL INTERSECT ALL PAVEMENT EDGES AT 90° INCLUDING RADIUS RETURNS.

LEGEND:

609.50 TW	TOP OF WALL
609.50 TC	TOP CURB
609.50 G	GUTTER
609.50	TOP PAVEMENT
	Light Bollard
	Tree
	Area Drain
	Water Meter
	Telephone Riser
	Signal Box
	Water Valve
8" SS	Sanitary Sewer Line
6" WTR	Water Line
8" PVC	Storm Drain Pipe
E	Underground Electric
	Ex. Tree To Be Removed Or Relocated By Others
	Proposed Manhole
	Existing Manhole
	Cleanout
	PK Nail
	Electric Box
	Sign
	Fire Hydrant
	Bush/Shrub

BENCH MARKS:

T.B.M. #1
SQUARE CUT IN THE NORTH CURB, 34'± SOUTH OF THE SOUTHEAST CORNER OF THE EXISTING BUILDING.
ELEVATION..... 603.50
N: 5865.8609
E: 6716.7591

T.B.M. #2
SQUARE CUT ON THE SOUTH 10' CURB INLET OF MORMAN LANE, 125'± WEST OF THE CENTERLINE OF SOPRAS CIRCLE AND MORMON LANE.
ELEVATION..... 607.84
N: 5990.5190
E: 7128.7696

T.B.M. #3
SQUARE CUT ON THE NORTHWEST CORNER OF TXU ELECTRIC TOWER, ON ON THE PARKING LOT AND 35'± EAST OF THE EXITING FIRE STATION
ELEVATION..... 605.23
N: 6266.8409
E: 7045.2937

STATE OF TEXAS
TUAN P. LAM
86968
LICENSED PROFESSIONAL ENGINEER

THE SEAL APPEARING ON THIS DOCUMENT WAS AUTHORIZED BY TUAN P. LAM, P.E. 86968 ON 02-20-02. ALTERATION OF A SEALED DOCUMENT WITHOUT THE PROPER NOTIFICATION TO THE RESPONSIBLE ENGINEER IS AN OFFENSE UNDER THE TEXAS ENGINEERING PRACTICE ACT.

PARKING EXPANSION ALT. # 3

ADDISON ATHLETIC CLUB EXPANSION & LEISURE POOL

ADDISON, TEXAS

R-DELTA ENGINEERS, INC.
618 MAIN STREET GARLAND , TEXAS 75040
Phone (972) 494-5031 www.rdelta.com

DESIGN: CTL	CHECK: JRP	SCALE: 1"=30'	10 OF 11
DRAWN: CEM	DATE: FEBRUARY, 2002	PROJECT: 982-01	

ISSUE DATE
FEB. 20, 2002

REVISIONS

ADDISON ATHLETIC CLUB EXPANSION AND LEISURE POOL
ADDISON, TEXAS

RON HOBBS ARCHITECTS
614 W. MAIN ST. SUITE #200 GARLAND, TEXAS 75040
(972) 494-0174 FAX (972) 494-0722

JOB NUMBER
0012

SHEET NAME
ALTERNATE "B" CIRCULAR DRIVE

SHEET NUMBER
C110

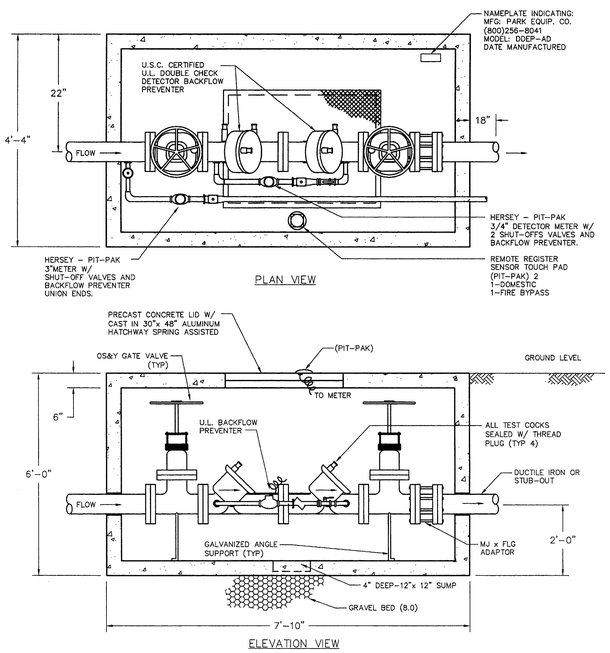

DOUBLE DETECTOR CHECK
BACKFLOW PREVENTER ASSEMBLY
N.T.S.

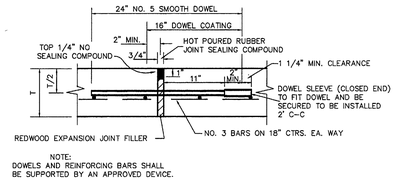

EXPANSION JOINT
N.T.S. LOCATED AS INDICATED.

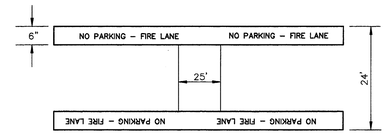

FIRE LANE PAVEMENT
MARKING DETAIL
N.T.S.

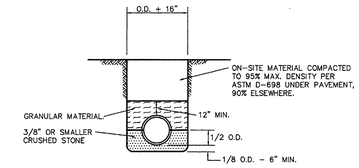

STORM AND SANITARY SEWER PIPE
EMBEDMENT-PVC AND POLYETHYLENE
N.T.S.

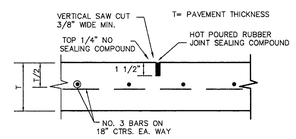

SAWED DUMMY (CONTROL) JOINT
N.T.S. MAXIMUM SPACING IS 20' CTRS. (TYP.)

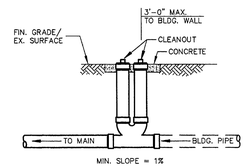

DOUBLE CLEANOUT
N.T.S.

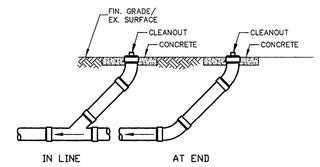

TYPICAL CLEANOUT
N.T.S.

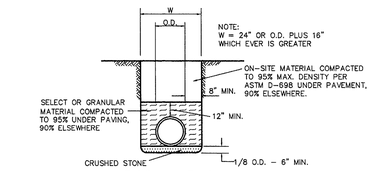

RCP & PVC
6" WATER PIPE EMBEDMENT
N.T.S.

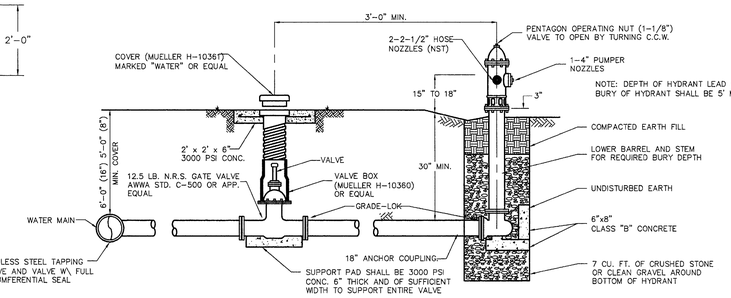

VALVE BOX DETAIL
N.T.S.

FIRE HYDRANT INSTALLATION
N.T.S.

NOTE:
THE MUELLER "CENTURION" OR EQUAL
IN GENERAL , ALL FIRE HYDRANTS SHALL
CONFORM TO AWWA STANDARD SPECIFICATIONS
FOR FIRE HYDRANTS FOR ORDINARY WATER
WORKS SERVICE FOR WATER AND SANITARY
SEWER IMPROVEMENTS. FIRE HYDRANTS WITH
A BARREL APPROXIMATELY 7" INSIDE DIAMETER.
ALL HYDRANTS SHALL BE EQUIPPED WITH A
BREAKAWAY FLANGE. ALL HYDRANTS SHALL BE
APPROVED IN ACCORDANCE WITH THE STANDARD
SPECIFICATIONS AND SPECIAL PROVISIONS.

VALVES AND VALVES BOXES:
REFERENCE TO SPECIFICATION #GV-95.1

VALVE BOXES SHALL BE CAST IRON AND SHALL BE OF SUFFICIENT LENGTH AND DIAMETER TO OPERATE ALL VALVES BURIED IN THE GROUND. COVERS SHALL BE MARKED "WATER" THE BOXES SHALL REST ON THE VALVE AND BE ADJUSTED SO THAT THE COVER MAY BE SET FLUSH WITH THE FINISHED GRADE.

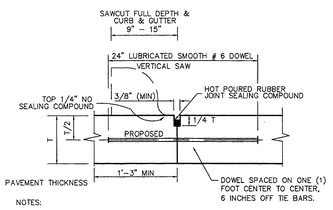

NOTES:

1. NO. 5 SMOOTH DOWEL BAR MAY BE USED IN 5 INCH AND 6 INCH PAVEMENT THICKNESS.
2. LONGITUDINAL BUTT CONSTRUCTION MAY BE UTILIZED IN PLACE OF LONGITUDINAL HINGED (KEYWAY) JOINT AT CONTRACTORS OPTION.
3. DOWEL BARS SHALL BE DRILLED INTO PAVEMENT HORIZONTALLY BY USE OF A MECHANICAL RIG.

DRILLING BY HAND IS NOT ACCEPTABLE, PUSHING DOWEL BARS INTO GREEN CONCRETE NOT ACCEPTABLE.

LONGITUDINAL BUTT JOINT
N.T.S. LOCATED AS INDICATED.

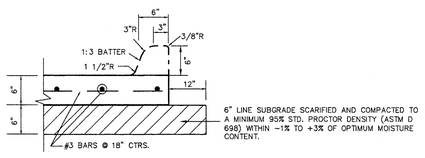

CONCRETE PAVEMENT SECTION
N.T.S.

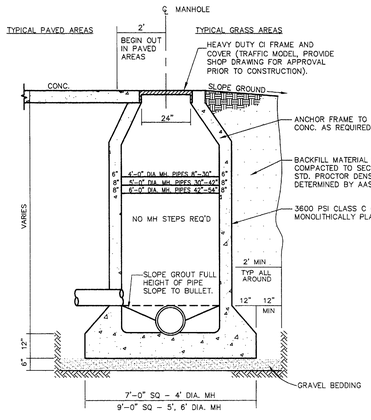

NOTE:
WHERE DROP M.H. IS REQUIRED, USE INSIDE
DROP CONNECTION AS PER TOWN OF ADDISON STANDARDS.

CAST IN PLACE MANHOLE
N.T.S.

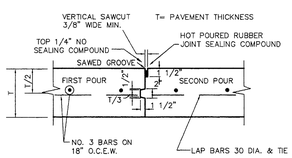

CONSTRUCTION JOINT
N.T.S.

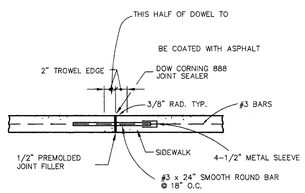

NOTE: EXPANSION JOINTS TO BE SPACED AT 30'
OR ADJACENT TO PAVEMENT EXPANSION JOINTS

EXPANSION JOINT-SIDEWALK
N.T.S.

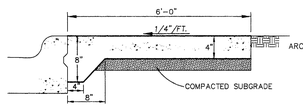

NOTES:

1. ALL HONEYCOMB IN BACK OF CURB TO BE TROWEL-PLASTERED BEFORE POURING SIDEWALK.
2. LUG MAY BE FORMED BY SHAPING SUBGRADE TO APPROXIMATE DIMENSIONS SHOWN.

SIDEWALK DETAILS
N.T.S.

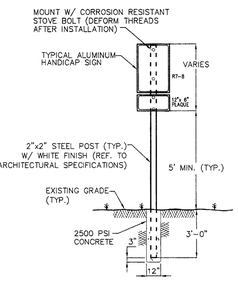

TYPICAL SIGNAGE MOUNTING DETAIL
N.T.S.

STATE OF TEXAS
TUAN P. LAM
86968
LICENSED
PROFESSIONAL ENGINEER

THE SEAL APPEARING ON THIS DOCUMENT WAS AUTHORIZED BY TUAN P. LAM, P.E. 86968 ON 04-24-02. ALTERATION OF A SEALED DOCUMENT WITHOUT THE PROPER NOTIFICATION TO THE RESPONSIBLE ENGINEER IS AN OFFENSE UNDER THE TEXAS ENGINEERING PRACTICE ACT.

CONSTRUCTION DETAILS
ADDISON ATHLETIC CLUB
EXPANSION & LEISURE POOL
ADDISON, TEXAS

R-DELTA ENGINEERS, INC.
618 MAIN STREET GARLAND , TEXAS 75040
Phone (972) 494-5031 www.rdelta.com

DESIGN:	CTL	CHECK:	JRP	SCALE: 1"=30'	11 OF 11
DRAWN:	CEM	DATE: FEBRUARY, 2002		PROJECT: 982-01	

ISSUE DATE
FEB. 20, 2002
REVISIONS

ADDISON ATHLETIC CLUB EXPANSION
AND
LEISURE POOL
ADDISON, TEXAS

RON HOBBS ARCHITECTS
614 W. MAIN ST. SUITE #200 GARLAND, TEXAS 75040
(972) 494-0174 FAX (972) 494-0722

JOB NUMBER
0012

SHEET NAME
CONSTRUCTION
DETAILS
SHEET NUMBER
C111

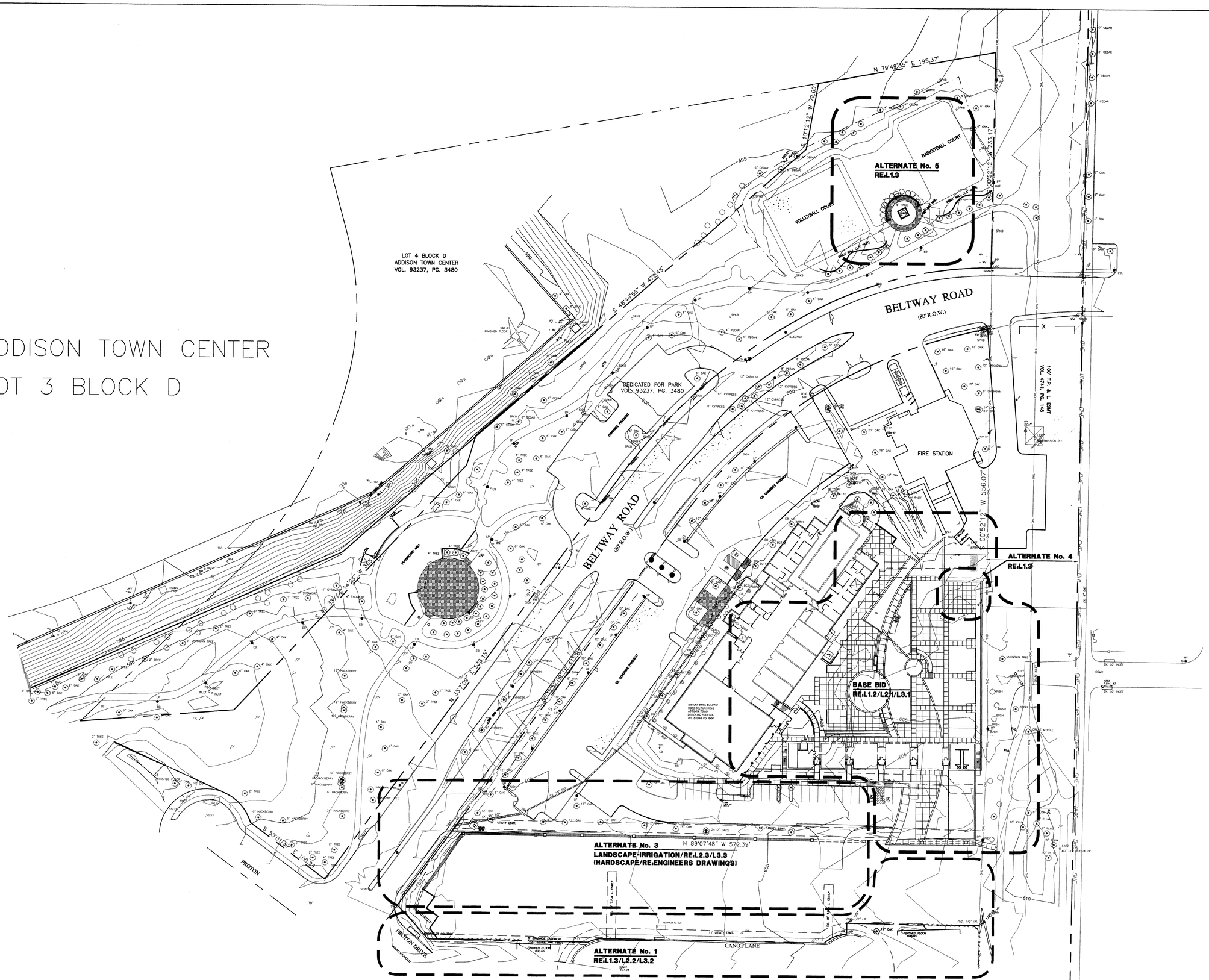

A **BASE BID AND ALTERNATES SITE PLAN**
SCALE: 1"=40'-0"

0 20 40 80
(FEET)
1 inch = 40 ft.

ISSUE DATE
02-20-02 BID SET

REVISIONS

ADDISON ATHLETIC CLUB EXPANSION AND LEISURE POOL
ADDISON, TEXAS

RON HOBBS ARCHITECTS
614 W. MAIN ST. SUITE #200 GARLAND, TEXAS 75040
(972) 494-0174 FAX (972) 494-0722

DAVID C. BALDWIN INCORPORATED
LANDSCAPE ARCHITECTURE PLANNING
5744 RICHMOND AVENUE
DALLAS, TEXAS 75206
PH: 214-521-8100
FAX: 214-824-5562

2-20-02

JOB NUMBER
SITE PLAN
0012

SHEET NUMBER
L1.1

DAVID C. BALDWIN, INC. FILE
Time: 9:13 A.M. Drawing File: L1-1.DWG
Date: 02/20/2001 Scale: 1.0000=40.0000

BASE BID SITE FURNISHINGS LEGEND

KEY	KEY	DESCRIPTION & MODEL NO.	MANUFACTURER
TYPE A	3	BENCH LANDSCAPEFORMS "HYDEPARK"; 75" BENCH; METAL ROD; WHITE POWDERCOAT.	LANDSCAPEFORMS (Contact: Diane H. Collier) Phone: 888-667-1145
TYPE B	6	TRASH RECEPTACLE LANDSCAPEFORMS "PRESIDIO"; SIDE OPENING; WHITE POWDERCOAT WITH PRESIDIO ASH URN.	LANDSCAPEFORMS (Contact: Diane H. Collier) Phone: 888-667-1145

NOTES

1. PROVIDE ON-SITE SAMPLE FOR ARCHITECT'S/LANDSCAPE ARCHITECT'S APPROVAL FOR ALL PEDESTRIAN PAVING. BASE BID PEDESTRIAN PAVING TO BE BROOM FINISHED.

ALTERNATE No. 6 :CHANGE BROOM FINISH CONCRETE (AREA SHADED) TO SANDBLASTED EXPOSED AGGREGATE BASED ON THE FOLLOWING SPECIFICATIONS:

- MIX DESIGN
- PORTLAND CEMENT: ASTM C-150-81, TYPE I OR III.
- FINE AGGREGATE: CLEAN, HARD, DURABLE, UNCOATED NATURAL SAND, FREE FROM SILT, LOAM OR CLAY, MEETING REQUIREMENTS OF ASTM C-33-71a.
- COARSE AGGREGATE: HARD DURABLE, UNCOATED CRUSHED LIMESTONE MEETING REQUIREMENTS OF ASTM-C-33-82a., UNLESS OTHERWISE NOTED IN CONCRETE TYPE SCHEDULE, SIZE NO. 467 OR SIZE NO.67 AS SCHEDULE BELOW.
- SANDBLASTING
- HOLD NOZZLE PERPENDICULAR TO SURFACE AND MAINTAIN UNIFORM DISTANCE FROM SURFACE MOVING AT A RATE OF PROGRESS TO PROVIDE UNIFORMLY ABRADED SURFACE. BLAST SURFACES TO REMOVE SURFACE MATRIX AND LAITANCE AND PARTIALLY EXPOSE AGGREGATE. MATCH APPROVED FINISH.
- REMOVE THE GROUT AT THE SURFACE BY SIMULTANEOUSLY BRUSHING AND HOSING WITH POTABLE WATER.
- DO NOT OVER EXPOSE OR DISLODGE AGGREGATE.
- DO NOT ALLOW WATER TO STAND ON SURFACE OF CONCRETE.

2. REFER TO B/L1.2 FOR LIGHT FIXTURE TYPE B
3. REFER TO E/L1.4 FOR DRAIN DETAIL IN PAVING AREAS
4. REFER TO F/L1.4 FOR DRAIN DETAIL IN LANDSCAPE AREAS
5. REFER TO MEP DRAWINGS FOR LIGHT FIXTURES SCHEDULE

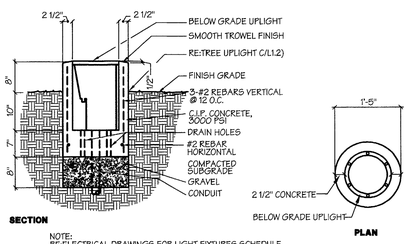

NOTE:
RE:ELECTRICAL DRAWINGS FOR LIGHT FIXTURES SCHEDULE

B TREE UPLIGHT LIGHT FIXTURE TYPE B
SCALE: 1"=1'-0"

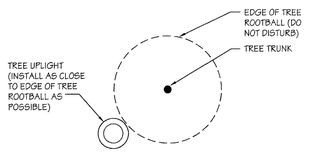

C TREE UPLIGHT LIGHT FIXTURE TYPE B
N.T.S PLAN

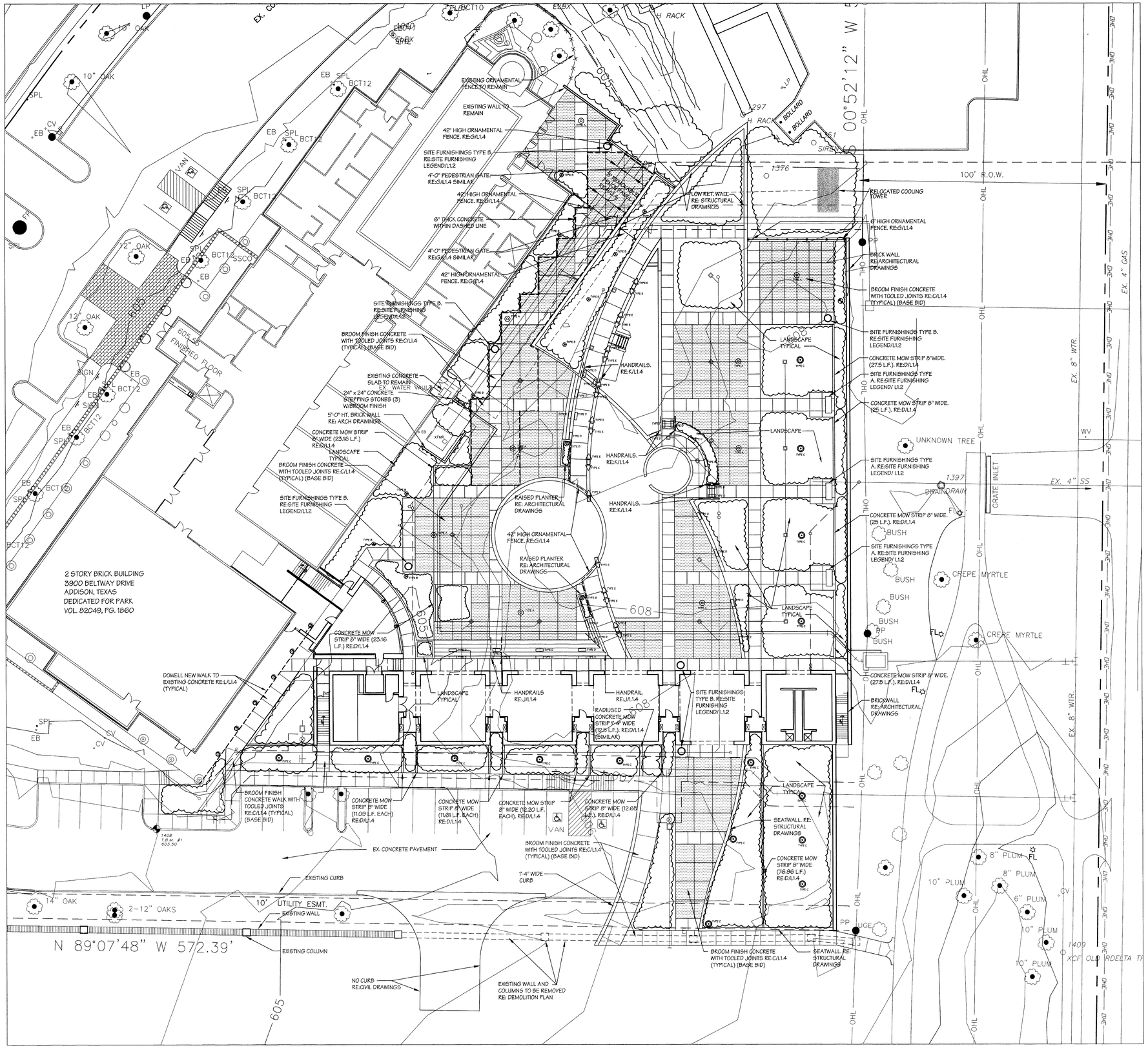

A HARDSCAPE PLANS
SCALE: 1"=16'-0"

0 8 16 32
(FEET)
1 inch = 16 ft.

ISSUE DATE
02-20-02 BID SET
REVISIONS

ADDISON ATHLETIC CLUB EXPANSION AND LEISURE POOL
ADDISON, TEXAS

RON HOBBS ARCHITECTS
614 W. MAIN ST. SUITE #200 GARLAND, TEXAS 75040
(972) 494-0174 FAX (972) 494-0722

DAVID C. BALDWIN INCORPORATED
LANDSCAPE ARCHITECTURE PLANNING
5744 RICHMOND AVENUE
DALLAS, TEXAS 75206
PH: 214.821.5100
FAX: 214.824.5062

STATE OF TEXAS
DAVID C. BALDWIN
704
REGISTERED
LANDSCAPE ARCHITECT
2-20-02

JOB NUMBER
HARDSCAPE PLAN
0012

SHEET NUMBER
L1.2

DAVID C. BALDWIN, INC. FILE
Time: 9:21 A.M.
Date: 02/20/2002
Drawing File: L1-2.DWG
Scale: 1.0000=16.0000

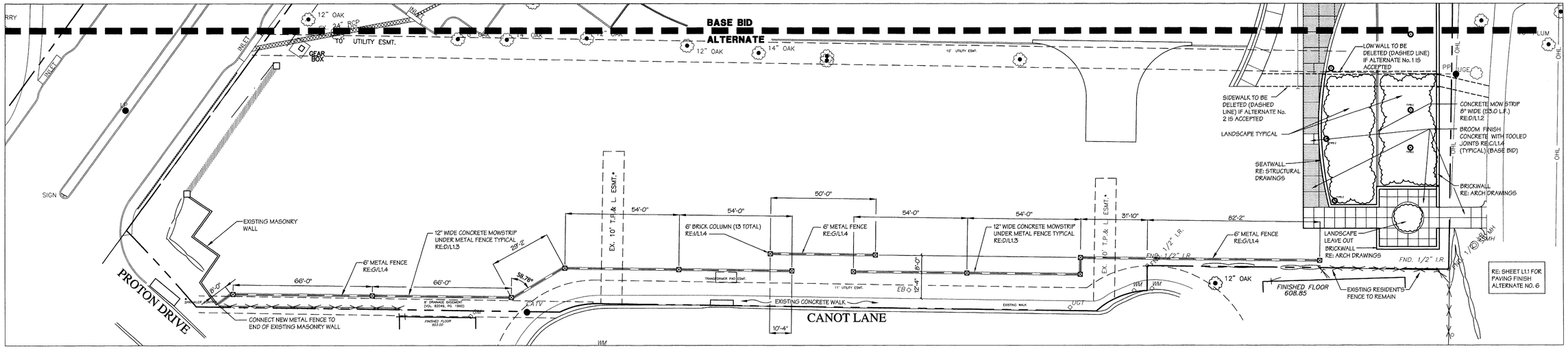

A ALTERNATE No. 1 HARDSCAPE PLAN

SCALE: 1"=20'-0"

0 10 20 40 (FEET) 1 inch = 20 ft.

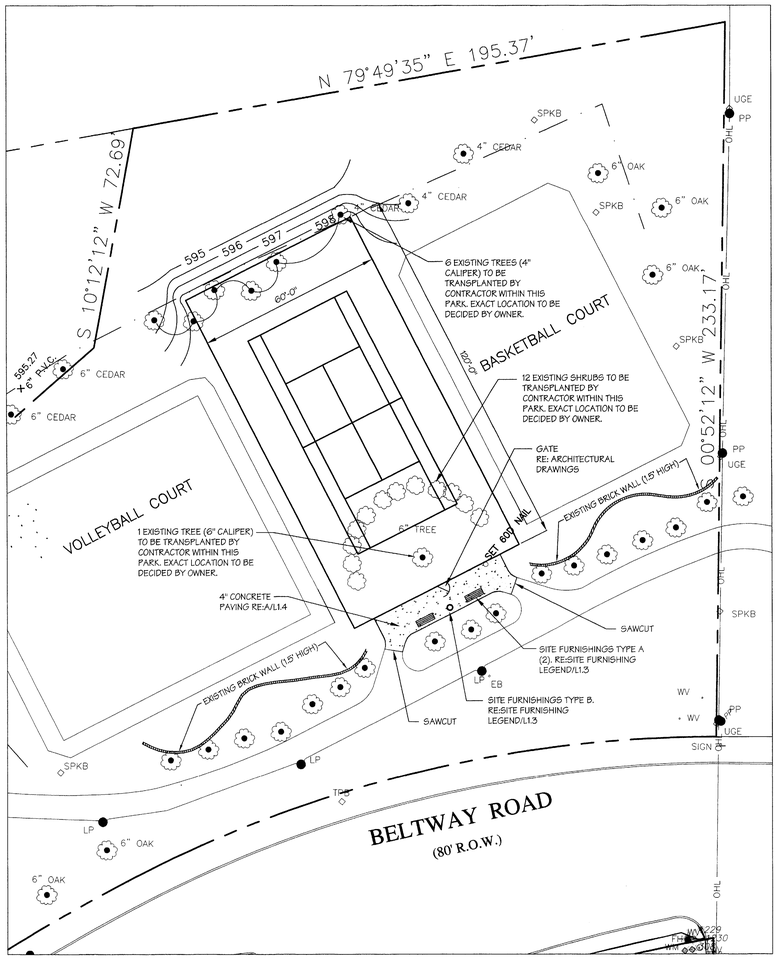

B ALTERNATE No. 5 HARDSCAPE PLAN

SCALE: 1"=20'-0"

0 10 20 40 (FEET) 1 inch = 20 ft.

ALTERNATE No. 5 SITE FURNISHINGS LEGEND

KEY	KEY	DESCRIPTION & MODEL NO.	MANUFACTURER
TYPE A	2	BENCH Model #: F3360 WABASH VALLEY Prestige Series 6' bench w/arms, weave pattern, in ground mount.	WABASH VALLEY MANUFACTURING, INC REP. THE PLAYWELL GROUP. CONTACT LISA WOOLSEY (972-488-9355)
TYPE B	1	TRASH RECEPTACLE Model #: LRW22 WABASH VALLEY, weave pattern, RPL22 black liner, flat black 22 gal lid, 10056 black in ground post.	WABASH VALLEY MANUFACTURING, INC REP. THE PLAYWELL GROUP. CONTACT LISA WOOLSEY (972-488-9355)

NOTE: TO BE APPROVED BY OWNER BEFORE ORDERING

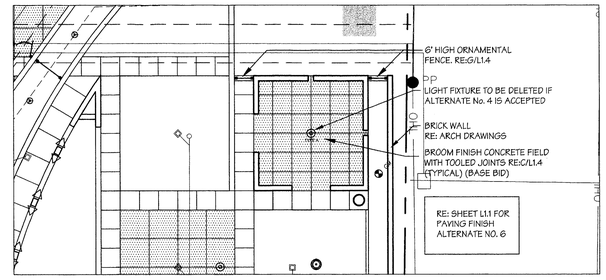

C ALTERNATE No. 4 HARDSCAPE PLAN

SCALE: 1"=16'-0"

0 8 16 32 (FEET) 1 inch = 16 ft.

ISSUE DATE
02-20-02 BID SET

REVISIONS

ADDISON ATHLETIC CLUB EXPANSION AND LEISURE POOL
ADDISON, TEXAS

RON HOBBS ARCHITECTS
614 W. MAIN ST. SUITE #200 GARLAND, TEXAS 75040
(972) 494-0174
FAX (972) 494-0722

DAVID C. BALDWIN INCORPORATED
LANDSCAPE ARCHITECTURE PLANNING
5744 RICHMOND AVENUE
DALLAS, TEXAS 75206
PH: 214.521.5100
FAX: 214.524.5362

STATE OF TEXAS
DAVID C. BALDWIN
704
2-20-02

JOB NUMBER
ALTERNATES HARDSCAPE PLAN
0012

SHEET NUMBER
L1.3

DAVID C. BALDWIN, INC. FILE
Time: 4:16 P.M. Drawing File: L1-LDWG
Date: 02/20/2002 Scale: 1"=20'-0"/16'-0"

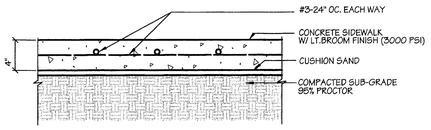

A CONCRETE PEDESTRIAN PAVING
SCALE: 1 1/2"=1'-0"

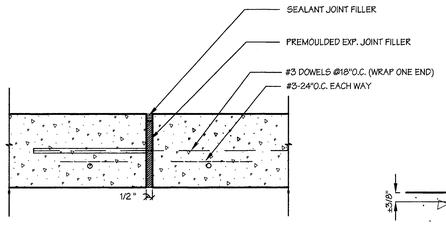

B EXPANSION JOINT
SCALE: 3"=1'-0" SECTION

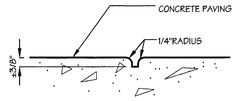

C TOOLED SCORE JOINT
SCALE: 3"=1'-0"

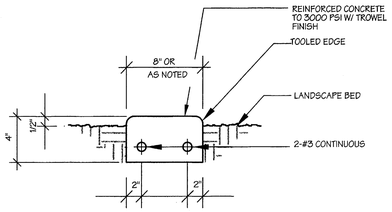

D CONCRETE MOWSTRIP
SCALE: N.T.S.

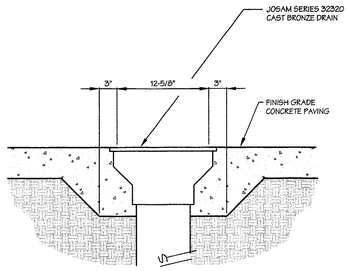

E PAVING AREA DRAIN
SCALE: 3"=1'-0"

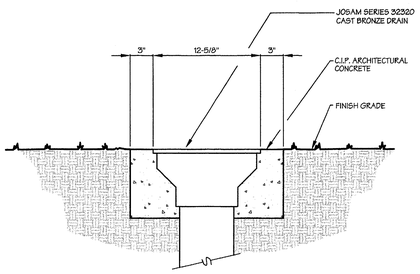

F LANDSCAPE AREA DRAIN
SCALE: 3"=1'-0"

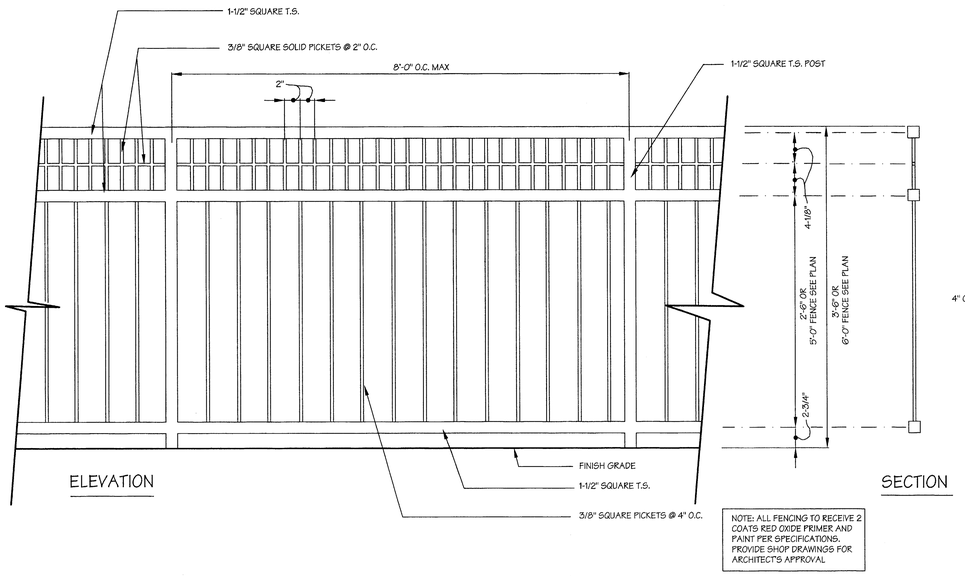

NOTE: ALL FENCING TO RECEIVE 2 COATS RED OXIDE PRIMER AND PAINT PER SPECIFICATIONS. PROVIDE SHOP DRAWINGS FOR ARCHITECT'S APPROVAL

G 42" & 6'-0" ORNAMENTAL FENCE
SCALE: 1-1/2"=1'-0"

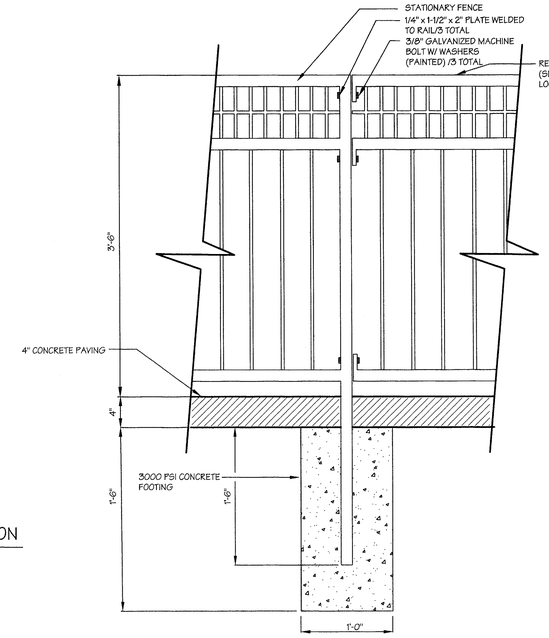

H REMOVABLE FENCE PANEL
SCALE: 1-1/2"=1'-0" ELEVATION

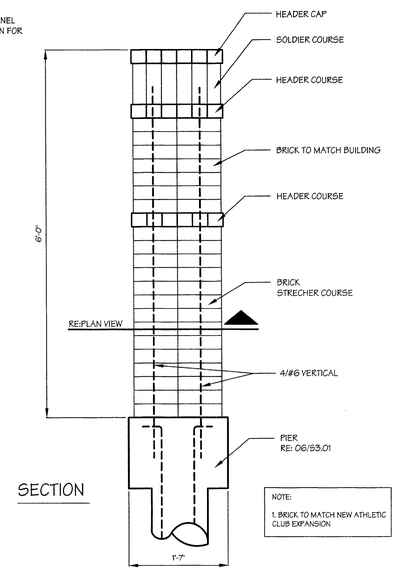

NOTE:
1. BRICK TO MATCH NEW ATHLETIC CLUB EXPANSION

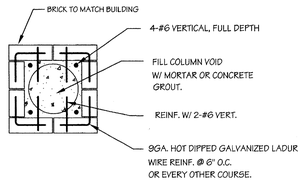

I BRICK COLUMN
SCALE: 1"=1'-0"

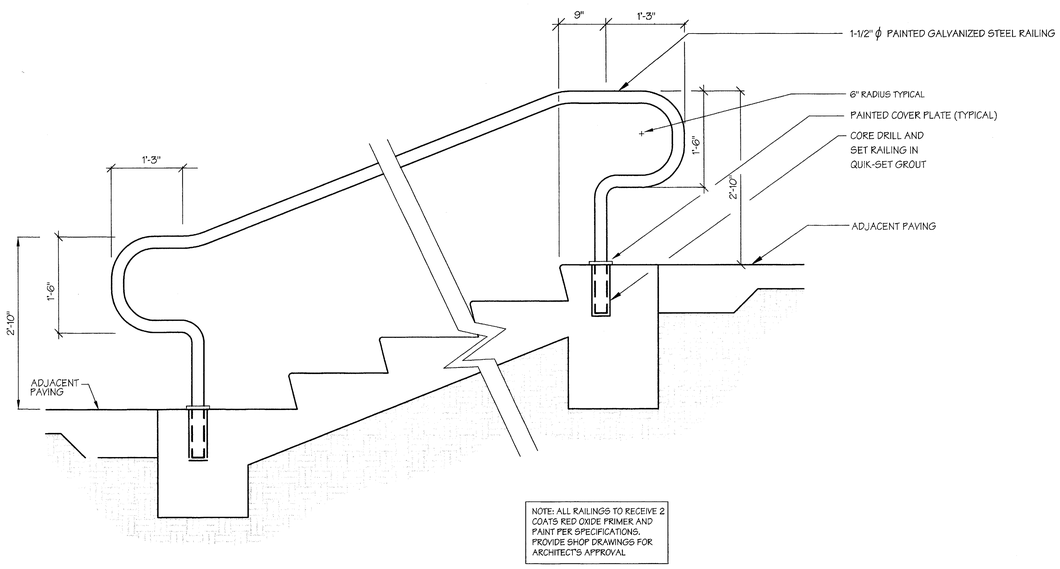

NOTE: ALL RAILINGS TO RECEIVE 2 COATS RED OXIDE PRIMER AND PAINT PER SPECIFICATIONS. PROVIDE SHOP DRAWINGS FOR ARCHITECT'S APPROVAL

J RAILING SECURED TO STEPS
SCALE: 1"=1'-0"

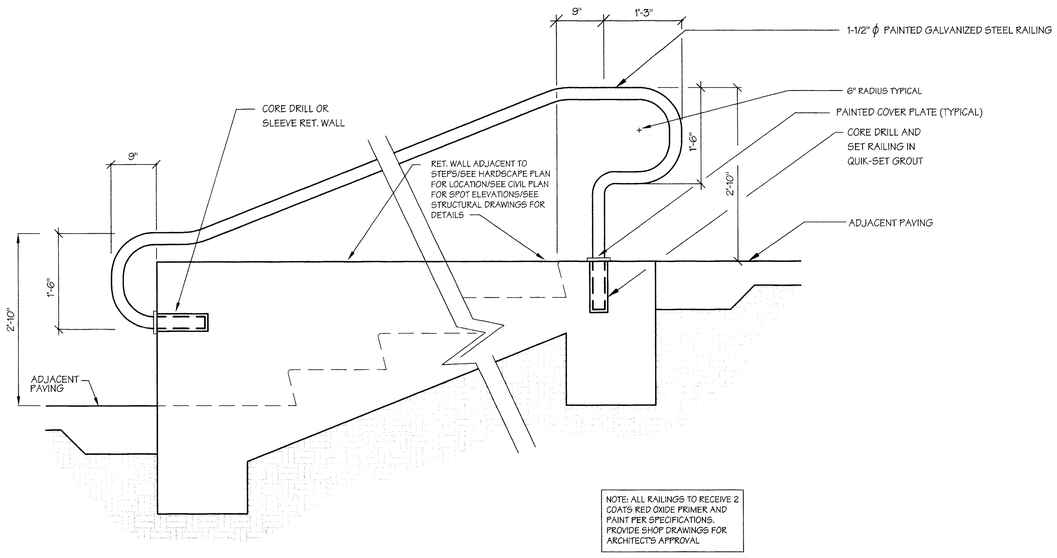

NOTE: ALL RAILINGS TO RECEIVE 2 COATS RED OXIDE PRIMER AND PAINT PER SPECIFICATIONS. PROVIDE SHOP DRAWINGS FOR ARCHITECT'S APPROVAL

K RAILING SECURED TO ADJACENT RET. WALL
SCALE: 1"=1'-0"

ISSUE DATE
02-20-02 BID SET

REVISIONS

ADDISON ATHLETIC CLUB EXPANSION AND LEISURE POOL
ADDISON, TEXAS

RON HOBBS ARCHITECTS
614 W. MAIN ST. SUITE #200 GARLAND, TEXAS 75040
(972) 494-0174 FAX (972) 494-0722

DAVID C. BALDWIN INCORPORATED
LANDSCAPE ARCHITECTURE PLANNING
5744 RICHMOND AVENUE
DALLAS, TEXAS 75206
PH: 214.821.8300
FAX: 214.824.5562

STATE OF TEXAS
DAVID C. BALDWIN
704
REGISTERED
LANDSCAPE ARCHITECT
2-20-02

JOB NUMBER
HARDSCAPE DETAILS
0012

SHEET NUMBER
L1.4

DAVID C. BALDWIN, INC. FILE
Time: 10:28 A.M. Drawing File: L1-4.DWG
Date: 02/20/2002 Scale: 1.0000=16.0000

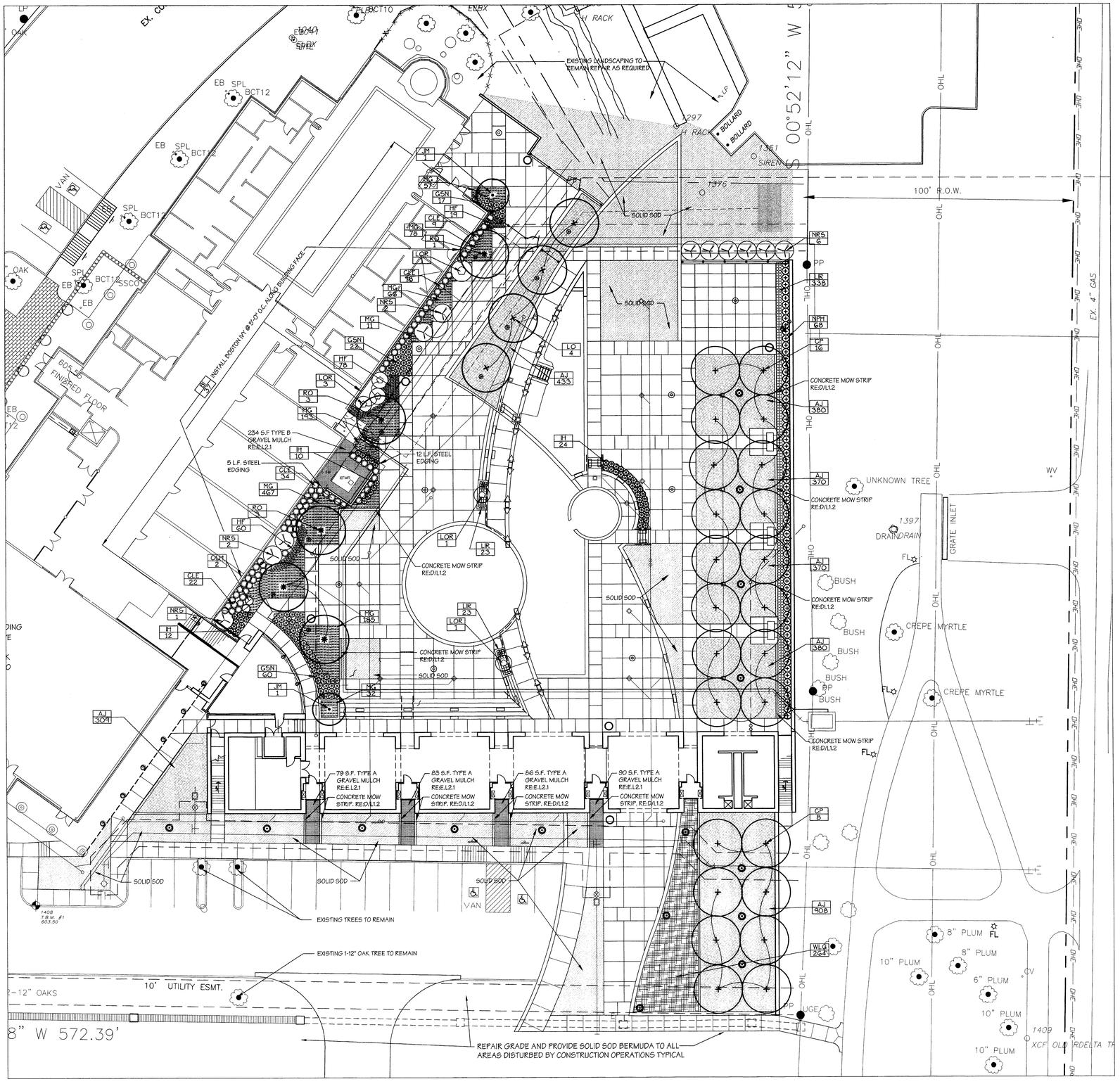

A LANDSCAPE PLANS
SCALE: 1"=16'-0"

0 8 16 32
(FEET)
1 inch = 16 ft.

PLANT LIST

KEY	QTY.	COMMON NAME	BOTANICAL NAME	SIZE	REMARKS
LO	4	LIVE OAK	*Quercus virginiana*	100 gallon, minimum 3-1/2" caliper; 15' ht. x 6' spread.	Container-grown; full head; MATCHED
RO	5	SHUMARD RED OAK	*Quercus shumardii*	100 gallon, minimum 3-1/2" caliper; 16' ht. x 6' spread.	Container-grown; full head; branching at 6'; matched.
CP	24	CHINESE PISTACHE	*Pistacia chinensis*	100 gallon, minimum 3-1/2" caliper; 15' ht. x 6' spread	Container-grown; Full; matched; specimen quality
LOR	6	CHINESE FRINGE FLOWER	*Loropetalum chinese "Burgundy"*	7 gallon; minimum 36" ht. and 30" spread.	Full; plant 36"o.c.
JM	2	JAPANESE MAPLE (GREEN)	*Acer palmatum 'Viride'*	Minimum 7' ht. and 4' spread.	Specimen; container grown or containerized.
NRS	11	NELLIE R. STEVENS HOLLY	*Ilex "Nellie R. Stevens"*	100 gallon; minimum 3" caliper; 10' ht. x 5' spread.	Container-grown; full-to-ground; matched.
OH	2	OAKLEAF HYDRANGEA	*Hydrangea quercifolia erythrosora*	7 gallon; minimum 36" ht. x 36" spread.	Full; multi-trunk; specimem quality.
GSN	99	GULFSTREAM NANDINA	*Nandina domestica "Gulfstream"*	5 gallon; minimum 20" ht. and 18" spread.	Full-to-ground;
IH	53	INDIAN HAWTHORNE	*Raphiolepis indica "Ballerina"*	5 gallon; minimum 12" ht. and 15" spread.	Full-to-ground; plant 24" o.c.
NPH	84	NEEDLEPOINT HOLLY	*Ilex cornuta "Needlepoint"*	5 gallon; minimum 20" ht. and 18" spread.	Full-to-ground; plant 30" o.c.
CLE	84	CLEYERA	*Ternstroemia gymnanthera*	5 gallon; minimum 24" ht. and 18" spread.	Full-to-ground
HF	157	HOLLY FERN	*Cyrtomium falcatum*	2 gallon; minimum 15" ht. and 15" spread.	Full-to-ground; plant 12" o.c.
AJ	3150	ASIAN JASMINE	*Trachelospermum aelaticum*	1 gallon (minimum 3 runners at 12" long)	Full; plant 18"o.c.
BI	37	"LOWI" BOSTON IVY	*Parthenocissus tricuspidata "Lowii"*	1 gallon	With stake; plant as close to wall as possible
W.LG	264	WEEPING LOVE GRASS	*Eragrostis curvula*	1 gallon	Full; plant 24"o.c.
MG	1089	MONKEY GRASS	*Ophiopogon japonicus*	4" pot	Full; plant 12"o.c.
L	384	"BIG BLUE" LIRIOPE	*Liriope muscari "Big Blue"*	4" pot	Full; plant 12"o.c.

GENERAL NOTES:

1. Quantities shown on Plant List are Landscape Architect's estimate only and should be verified prior to bidding. Contractor shall be responsible for bidding and providing quantity of plants required at spacing designated for bed sizes and configurations shown on plans regardless of quantities designated on Plant List.

2. All size requirements and container sizes for plant materials shown on the plant list must be met as a minimum. If any specific requirement cannot be met (for example, if a 100 gallon tree cannot meet the specified caliper requirement), the contractor shall notify the landscape architect prior to bidding. The container size must be met regardless whether the specified sizes can be reached with a smaller size container.

3. Contractor to repair all landscape areas disturbed by construction operations Provide solid sod grass and repair existing irrigation system if necessary. Applies to all alternates also.

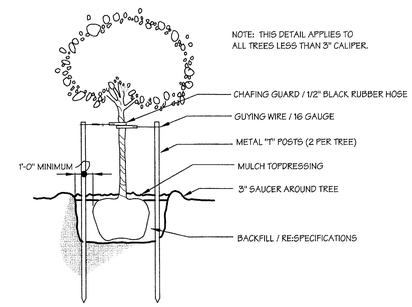

B TREE STAKING DETAIL
SCALE: N.T.S.

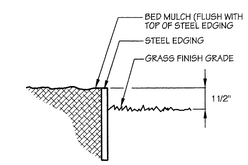

C STEEL EDGING
SCALE: N.T.S.

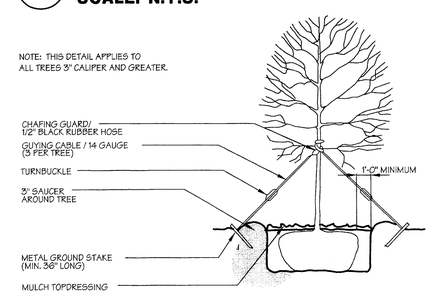

D TREE GUYING DETAIL
SCALE: N.T.S.

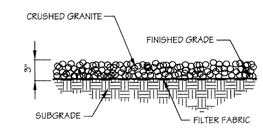

CRUSHED GRANITE
TYPE A: "MOSS GREEN"
TYPE B: REGULAR PINK/GRAY/BLACK COLOR

CRUSHED GRANITES AVAILABLE FROM CUSTOM STONE SUPPLY (PHONE: 972-243-1144) OR APPROVED EQUAL

E GRAVEL MULCH
SCALE: N.T.S.

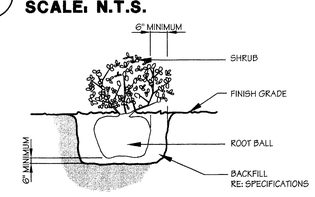

F SHRUB PLANTING DETAIL
SCALE: N.T.S.

ISSUE DATE
02-20-02 BID SET

REVISIONS

ADDISON ATHLETIC CLUB EXPANSION AND LEISURE POOL
ADDISON, TEXAS

RON HOBBS ARCHITECTS
614 W. MAIN ST. SUITE #200 GARLAND, TEXAS 75040
(972) 494-0174 FAX (972) 494-0722

DAVID C. BALDWIN INCORPORATED
LANDSCAPE ARCHITECTURE PLANNING
8144 RICHMOND AVENUE
DALLAS, TEXAS 75226
PH: 214.521.5100
FAX: 214.524.5562

STATE OF TEXAS
DAVID C. BALDWIN
704
REGISTERED
LANDSCAPE ARCHITECT
2-20-02

JOB NUMBER
LANDSCAPE PLAN
0012

SHEET NUMBER
L2.1

DAVID C. BALDWIN, INC. FILE
Time: 10:31 A.M. Drawing File: L2-1.DWG
Date: 02/20/2001 Scale: 1.0000=16.0000

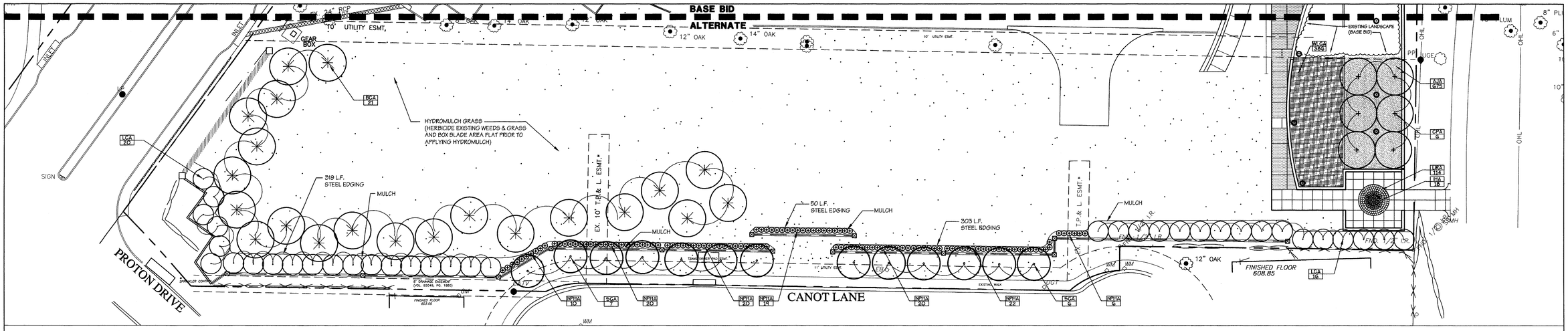

A ALTERNATE No. 1 LANDSCAPE PLAN
SCALE: 1"=20'-0"

0 10 20 40 (FEET) 1 inch = 20 ft.

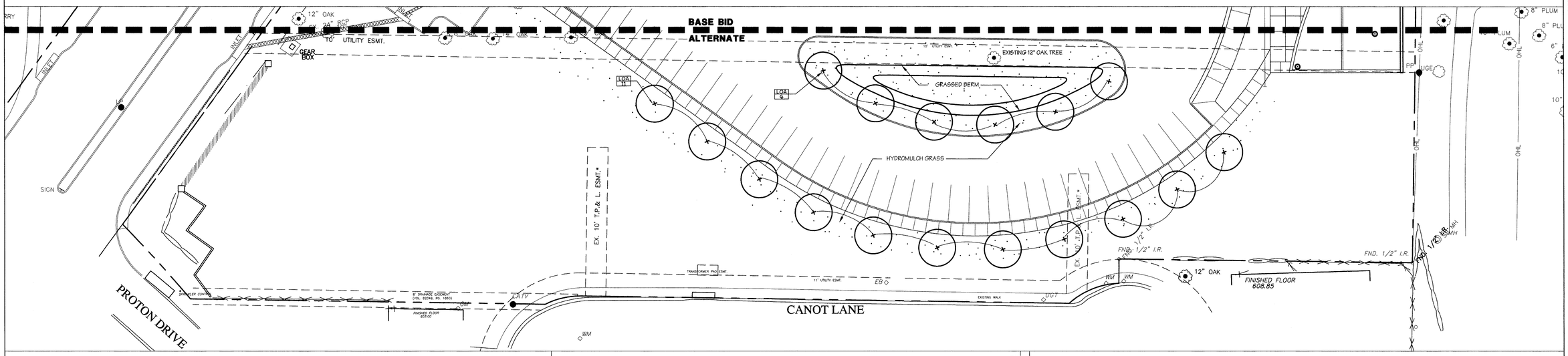

B ALTERNATE No. 3 LANDSCAPE PLAN
SCALE: 1"=20'-0"

0 10 20 40 (FEET) 1 inch = 20 ft.

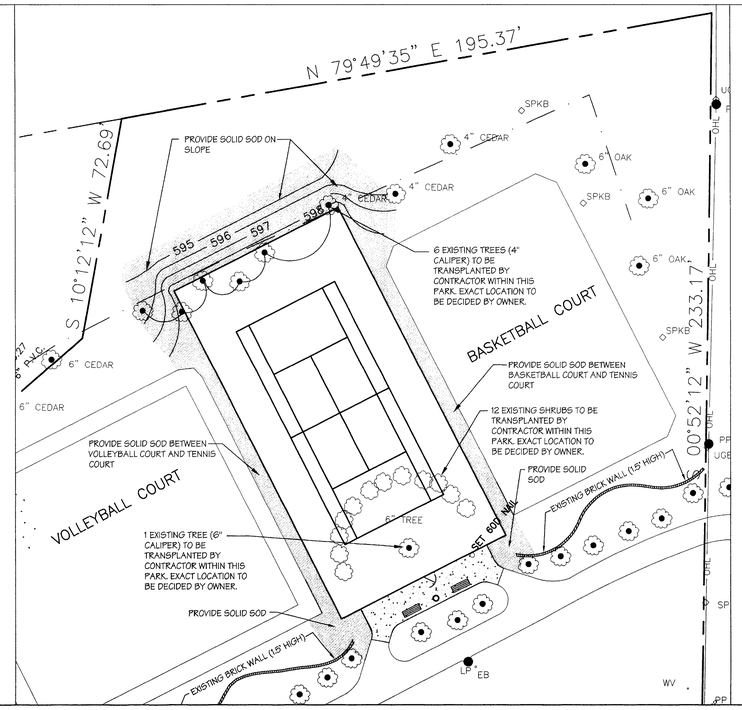

ALTERNATE No. 1 PLANT LIST

KEY	QTY.	COMMON NAME	BOTANICAL NAME	SIZE	REMARKS
BCA	21	BALD CYPRESS	Taxodium distichum	100 gallon, minimum 3-1/2" caliper x 16' ht. x 6' spread.	Container-grown; full head;
LCA	36	LEYLAND CYPRESS	Cupressocyparis leylandii	100 gallon, minimum 3-1/2" caliper x 12' ht. x 6' spread.	Container-grown; MATCHED.
SGA	13	SWEET GUM	Liquidambar styraciflua	100 gallon, minimum 3-1/2" caliper x 15' ht. x 5' spread.	Container-grown; MATCHED. Branching at 5' ht. min
NPHA	119	NEEDLEPOINT HOLLY	Ilex cornuta "Needlepoint"	5 gallon; minimum 20" ht. and 18" spread.	Full-to-ground; plant 24" o.c.
CPA	6	CHINESE PISTACHE	Pistacia chinensis	100 gallon; min. 15' ht. and 6' spread	container-grown; Full matched; specimen quality
IHA	18	INDIAN HAWTHORNE	Raphiolepis indica "Ballerina"	5 gallon; minimum 12" ht. and 15" spread.	Full-to-ground; plant 24" o.c.
WLGA	386	WEEPING LOVE GRASS	Eragrostis curvula	1 gallon	Full; plant 24"o.c.
AJA	675	ASIAN JASMINE	Trachelospermum asiaticum	1 gallon (minimum 3 runners at 12" long)	Full; plant 18"o.c.
LIRA	114	"BIG BLUE" LIRIOPE	Liriope muscari "Big Blue"	4" pot	Full; plant 12"o.c.

ALTERNATE No. 3 PLANT LIST

KEY	QTY.	COMMON NAME	BOTANICAL NAME	SIZE	REMARKS
LOA	17	LIVE OAK	Quercus virginiana	100 gallon 3 1/2" caliper; minimum 15' ht. and 6' spread.	Container-grown; full head; MATCHED.

C ALTERNATE No. 5 LANDSCAPE PLAN
SCALE: 1"=20'-0"

0 10 20 40 (FEET) 1 inch = 20 ft.

ISSUE DATE
02-20-02 BID SET

REVISIONS

ADDISON ATHLETIC CLUB EXPANSION AND LEISURE POOL
ADDISON, TEXAS

RON HOBBS ARCHITECTS
614 W. MAIN ST. SUITE #200 GARLAND, TEXAS 75040
(972) 494-0174 FAX (972) 494-0722

DAVID C. BALDWIN INCORPORATED
LANDSCAPE ARCHITECTURE PLANNING
5744 RICHMOND AVENUE
DALLAS, TEXAS 75206
PH: 214.821.5100
FAX: 214.824.5562

STATE OF TEXAS
DAVID C. BALDWIN
704
REGISTERED LANDSCAPE ARCHITECT
2-20-02

JOB NUMBER
ALTERNATES LANDSCAPE PLAN
0012

SHEET NUMBER
L2.2

DAVID C. BALDWIN, INC. FILE
Time: 3:59 P.M. Drawing File: L2-2.DWG
Date: 02/20/2001 Scale: 1.0000=16.0000

FIRE STATION
BELTWAY ROAD
(80' R.O.W.)
EX. CONCRETE PAVEMENT
REPAIR IRRIGATION SYSTEM IN FRONT OF BLDG. AND ON THE NORTH SIDE AS NEEDED TO MAINTAIN EXISTING SPRINKLERS IN FULL OPERATION.
RELOCATE EXISTING CONTROL VALVE MARKED "CV" TO NEW MAINLINE PIPE STUBBED OUT AND CONNECTED TO THE EXISTING MAINLINE PIPE. MAKE REPAIRS TO THE EXISTING SPRINKLER SYSTEM THAT OPERATES FROM THIS VALVE AS ARE NECESSARY TO MAINTAIN IN FULL OPERATION.
CONNECT NEW 2" MAIN LINE PIPE TO EXISTING MAINLINE IN THIS APPROXIMATE LOCATION (VERIFY EXACT LOCATION WITH OWNER'S REPRESENTATIVE). INSTALL 5 EXTRA RED UF-14/1 WIRE FROM THE NEW CONTROLLER TO OPERATE EXISTING VALVES IN FRONT OGF BLDG.
4" SLEEVE & A 2" WIRE CONDUIT
THE CONTRACTOR SHALL INSTALL A NEW 21/2" MAINLINE BETWEEN EXISTING CONTROL VALVES TO TIE EXISTING MAINLINE PIPE FROM THE SOUTH SIDE OF BUILDING TO THE NORTH SIDE OF BUILDING. THE CONTRACTOR SHALL ALSO MAKE ALL REPAIRS AS NECESSARY TO THE LANDSCAPE AND EXISTING IRRIGATION SYSTEM TO MAINTAIN IN COMPLETE OPERATION.
REMOVE ALL EXISTING SPRINKLERS IN NEW BLDG. AREA AND GIVE TO OWNER FOR FUTURE USE.
BORE 1 EA. 4" SLEEVE UNDER EA. SIDE OF ISLAND PER ADDISON CITY STANDARDS.
IRRIGATION CONTROLLER
2 STORY BRICK BUILDING
3900 BELTWAY DRIVE
ADDISON, TEXAS
DEDICATED FOR PARK
VOL. 82049, PG. 1860
2" IRRIGATION WATER METER WITH A 2" DOUBLE CHECK & BACKFLOW PREVENTER, TO BE INSTALLED BEFORE NEW BLDG. IS STARTED.
INSTALL NEW 2 1/2" MAINLINE PIPE TO THE EXISTING VALVES AND INSTALL NEW VALVE WIRES FROM THE NEW CONTROLLER TO OPERATE THESE VALVES.
TEMPORARY LOCATION OF NEW CONTROLLER TO BE MOVED WHEN BLDG. IS DONE.
INSTALL 2" TYPE "K" SOFT COPPER PIPE INSIDE A 4" PVC SCH. 40 SLEEVE. THE COPPER PIPE SHALL BE PRESSURE TESTED BEFORE ACCEPTANCE BY THE OWNER OR THE OWNER'S REPRESENTATIVE.
INSTALL 8 EA. RED UF-14/1 AND 1 EA. UF-14/1 WHITE WIRES TO THIS LOCATION FOR FUTURE OR ALTERNATE IRRIGATION, THESE WIRES SHALL BE INSTALLED FROM THE NEW TIMER.
REMOVE EXISTING SPRINKLERS IN NEW PARKING AND REPIPE EXISTING PLANTERS FOR FULL COVERAGE. MAINTAIN EXISTING MAINLINE PIPE ACROSS DRIVE, AS WELL AS EXISTING VALVE WIRES, MAKE REPAIRS AS ARE NECESSARY TO ACCOMPLISH THIS.
REPIPE TO EXISTING SPRINKLERS IN THESE ISLANDS USING 1/2" PIPE AS SHOWN.
APPROXIMATE LOCATION OF EXISTING 2" MAINLINE PIPE. MAKE CUT IN CONCRETE AND RUN 10 EA. UF-14/1 RED AND 1 EA. UF-14/1 WHITE DIRECT BURIAL WIRES IN TRENCH TO CONNECT TO EXISTING VALVES ON SOUTH SIDE AS WELL AS IN FRONT OF BUILDING. THESE WIRES SHALL BE INSTALLED TO A TEMPORAY TIMER, LOCATION OF WHICH SHALL BE DETERMINED IN THE FIELD BY THE CITY OR THE CITIES REPRESENTATIVE.
ABANDON EXISTING IRRIGATION FROM THIS POINT EAST, REPLACE WITH NEW SPRINKLERS AS SHOWN ON ALTERNATE DRAWINGS. CAP ALL EXISTING PIPE GOING UNDER NEW DRIVE.
N 89°07'48" W 572.39'
100' R.O.W.
UTILITY ESMT.
A IRRIGATION PLANS
SCALE: 1"=16'-0"
0 8 16 32
(FEET)
1 inch = 16 ft.
ISSUE DATE
02-20-02 BID SET
REVISIONS
ADDISON ATHLETIC CLUB EXPANSION AND LEISURE POOL
ADDISON, TEXAS
RON HOBBS ARCHITECTS
614 W. MAIN ST. SUITE #200 GARLAND, TEXAS 75040
(972) 494-0174 FAX (972) 494-0722
DAVID C. BALDWIN INCORPORATED
LANDSCAPE ARCHITECTURE PLANNING
JOB NUMBER
IRRIGATION PLAN
0012
SHEET NUMBER
L3.1

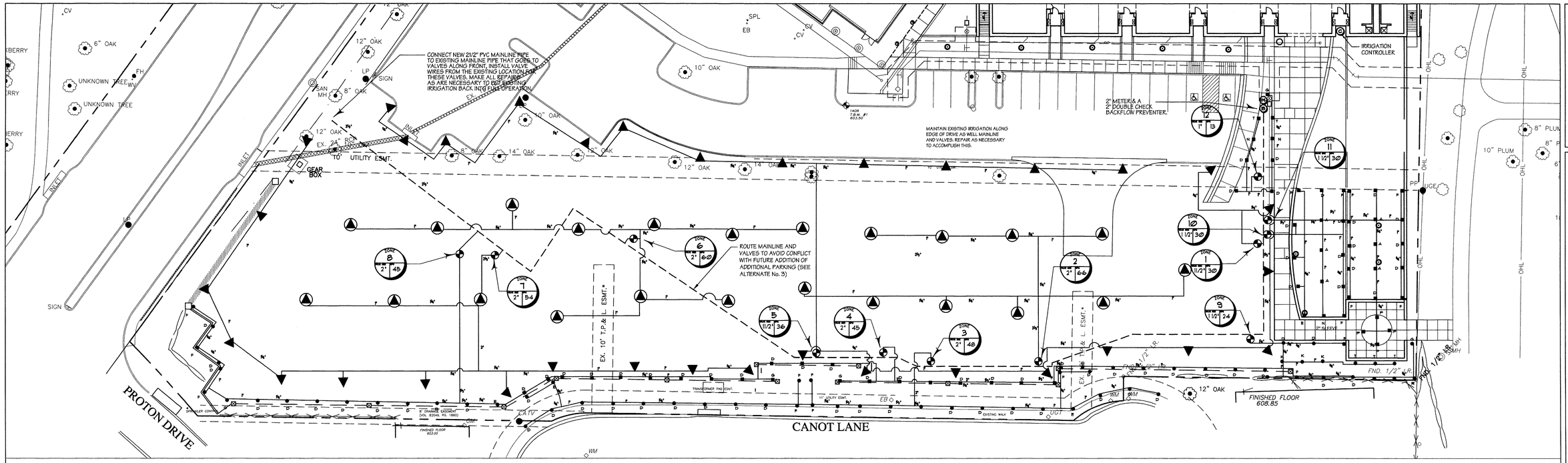

A ALTERNATE No. 1 IRRIGATION PLAN

SCALE: 1"=20'-0"

0 10 20 40 (FEET) 1 inch = 20 ft.

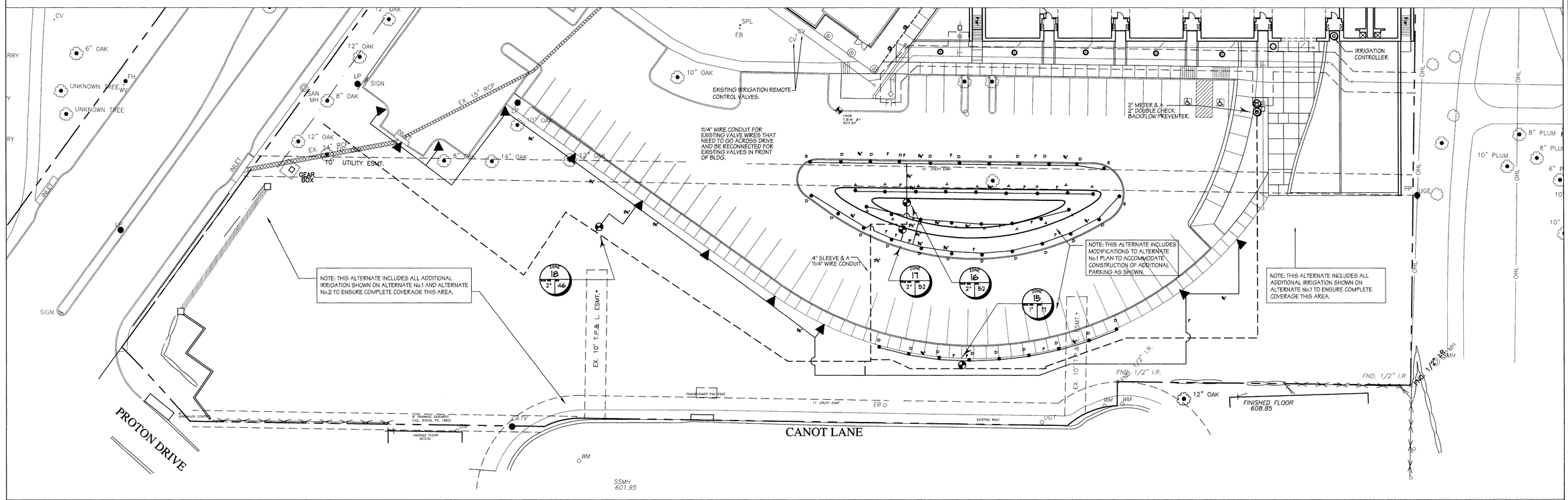

B ALTERNATE No. 3 IRRIGATION PLAN

SCALE: 1"=20'-0"

0 10 20 40 (FEET) 1 inch = 20 ft.

ISSUE DATE	
02-20-02	BID SET

REVISIONS

ADDISON ATHLETIC CLUB EXPANSION AND LEISURE POOL

ADDISON, TEXAS

RON HOBBS ARCHITECTS
614 W. MAIN ST. SUITE #200 GARLAND, TEXAS 75040
(972) 494-0174 FAX (972) 494-0722

DAVID C. BALDWIN INCORPORATED
LANDSCAPE ARCHITECTURE PLANNING
5744 RICHMOND AVENUE
DALLAS, TEXAS 75206
PH: 214.821.2100
FAX: 214.824.5562

STATE OF TEXAS
MICHAEL CALLANDER
5763
LICENSED IRRIGATOR

JOB NUMBER
ALTERNATES IRRIGATION PLAN
0012

SHEET NUMBER
L3.2

DAVID C. BALDWIN, INC. FILE
Time: 04:14 P.M. Drawing File: L3-2.DWG
Date: 02/20/2001 Scale: 1.0000=16.0000

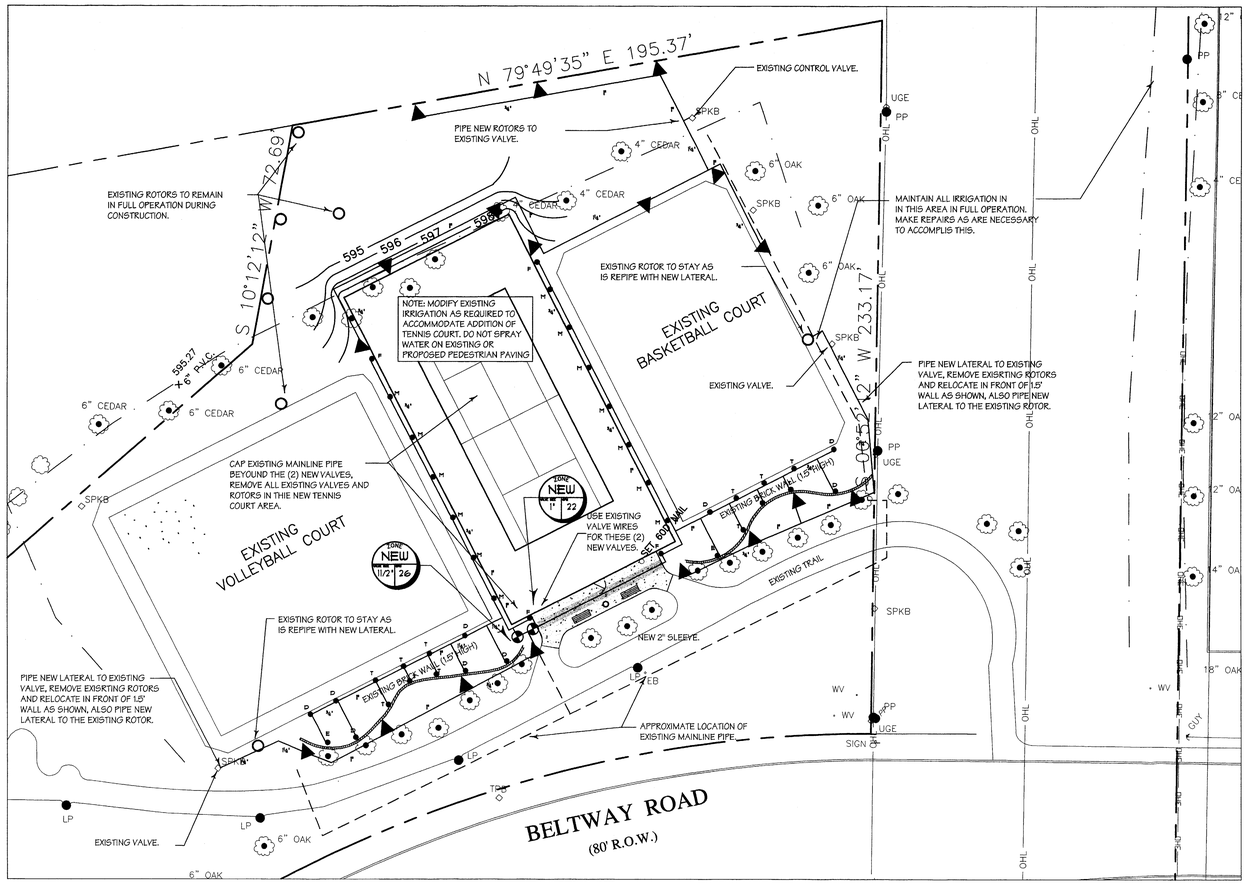

B ALTERNATE No. 5 IRRIGATION PLAN

SCALE: 1"=20'-0"

0 10 20 40
(FEET)
1 inch = 20 ft.

ISSUE DATE
02-20-02 BID SET

REVISIONS

ADDISON ATHLETIC CLUB EXPANSION AND LEISURE POOL

ADDISON, TEXAS

RON HOBBS ARCHITECTS
614 W. MAIN ST. SUITE #200 GARLAND, TEXAS 75040
(972) 494-0174 FAX (972) 494-0722

DAVID C. BALDWIN
INCORPORATED
LANDSCAPE ARCHITECTURE PLANNING
5744 RICHMOND AVENUE
DALLAS, TEXAS 75206
PH: 214.821.8100
FAX: 214.824.5562

STATE OF TEXAS
JOHN W. CALLANDER
5763
LICENSED IRRIGATOR

JOB NUMBER
ALTERNATES IRRIGATION PLAN
0012

SHEET NUMBER
L3.3

DAVID C. BALDWIN, INC. FILE
Time: 04:20 P.M. Drawing File: L3-2.DWG
Date: 02/20/2001 Scale: 1.0000=16.0000

LEGEND:

Symbol	Description
▲	HUNTER NO. PGP-ADJ-07 POP-UP PART CIRCLE ADJUSTABLE ROTOR SPRINKLER, INSTALLED USING A 3/4" LASCO PREFABRICATED SWING JOINT. 3.0 GPM AT 40 PSI 38' RADIUS
(▲)	HUNTER NO. PGP-36V-10 POP-UP FULL CIRCLE ROTOR SPRINKLER, INSTALLED USING A 3/4" LASCO PREFABRICATED SWING JOINT. 6.0 GPM AT 40 PSI 45' RADIUS
•	TORO NO. 570Z-4P 4" POP-UP TURF SPRAY BODY, INSTALLED USING A 1/2"x 18" PVC FLEX PIPE CONNECTION. REFER TO THE DETAIL DRAWING.
▪	TORO NO. 570Z-12P 12" POP-UP SHRUB SPRAY BODY, INSTALLED USING A 1/2"x 18" PVC FLEX PIPE CONNECTION. REFER TO THE DETAIL DRAWING.
	NOTE: REFER TO THE " NOZZLE SELECTION CHART" FOR THE PROPER NOZZLE PATTERNS FOR THE ABOVE TORO SPRAY HEADS.
⬣	BUCKNER NO. QB3SBL07 3/4" QUICK COUPLER VALVES, TO BE INSTALLED AS LOCATED ON THE DRAWING, USING A 3/4" LASCO PREFABRICATED SWING JOINT.
(C)	IRRI TROL MC-18PLUS-B 24 STATION IRRIGATION CONTROLLER'S. REFER TO DRAWING. THE CONTROLLER SHALL BE EQUIPPED WITH FULL LIGHTNING PROTECTION AS RECOMMENDED BY THE MANUFACTURE. NOTE: THE CONTRACTOR SHALL ALSO INSTALL A HUNTER MINI-CLIK RAIN AND FREEZE SENSOR.
◕	WEATHER MATIC 11000FCR SERIES 24 VOLT REMOTE CONTROL ELECTRIC IRRIGATION VALVES. VALVES TO BE INSTALLED IN NDS 214BC 14"x 19" VALVE BOXES. INSTALL A PVC BALL VALVE SIZED THE SAME AS THE REMOTE CONTROL VALVE (REFER TO THE KEY LOCATED AT EACH VALVE FOR THE STATION NUMBER, SIZE AND GPM OF EACH VALVE). THE CONTRACTOR SHALL ALSO INSTALL A 2" MASTER VALVE ON THE DOWNSTREAM SIDE OF THE DOUBLE CHECK. THIS VALVE SHALL BE INSTALLED IN A 18" VALVE BOX.
(B)	WATTS NO. 007M-2" DOUBLE CHECK VALVE BACK FLOW PREVENTER, INSTALLED IN A VALVE BOX SUITABLE IN SIZE FOR THE BACK FLOW PREVENTER. THE BACK FLOW PREVENTER SHALL BE INSTALLED AS PER ALL LOCAL AND STATE CODES. SYSTEM DEMAND IS 50 GPM @ 60 PSI.
(M)	INDICATES 2" IRRIGATION WATER METER. INSTALLATION OF THE METER SHALL BE COORDINATED WITH THE OWNER OR HIS REPRESENTATIVE. SYSTEM DEMAND IS 50 GPM AT 60 PSI. CONTRACTORS BIDDING THIS PROJECT SHALL VERIFY THE WATER PRESSURE, IF PRESSURE IS LOWER THAN REQUIRED THE CONTRACTORS SHALL IMMEDIATELY NOTIFY THE ARCHITECT SO CHANGES MAY BE MADE TO THE DRAWINGS TO REFLECT THE LOWER PRESSURE, FAILURE TO DO SO SHALL OBLIGATE THE CONTRACTOR FOR ANY CHANGES NEEDED AFTER THE SYSTEM IS INSTALLED.
— — — —	INDICATES PVC CL-200 MAIN LINE PIPE ROUTING. REFER TO DRAWING FOR SIZE.
———	INDICATES PVC CL-200 LATERAL LINE PIPING DOWNSTREAM OF THE REMOTE CONTROL VALVES. REFER TO THE DRAWING FOR SIZING.
(shaded band)	INDICATES PVC SCH. 40 PIPE SLEEVES UNDER PAVED AREAS, AND SIDEWALKS. SLEEVES NOT SIZED ON DRAWING ARE 2"

GENERAL NOTES

1) REFER TO THE LANDSCAPE PLANS WHEN TRENCHING TO AVOID TREES AND SHRUBS.
2) ALL MAINLINE PIPING SHALL BE BURIED TO A MINIMUM DEPTH OF 18" OF COVER. ALL LATERAL PIPING SHALL BE BURIED TO A MINIMUM DEPTH OF 12" OF COVER.
3) ADJUST ALL NOZZLES TO REDUCE WATER WASTE ON HARD SURFACES & BLDG. WALLS.
4) THROTTLE ALL VALVES ON SHRUB LINES AS REQUIRED TO PREVENT FOGGING.
5) ALL CONTROL WIRE SPLICES SHALL BE MADE IN VALVE BOXES USING SNAP-TITE CONNECTORS AND SEALANT.
6) THE CONTRACTOR SHALL PREPARE AN AS-BUILT DRAWING ON A REPRODUCIBLE MYLAR FILM SHOWING ALL IRRIGATION INSTALLATION. A MYLAR SEPIA OF THE ORIGINAL PLAN MAYBE OBTAINED FROM THE OWNER FOR REPRODUCTION BY THE CONTRACTOR AT HIS COST. THE DRAWING SHALL LOCATE ALL MAINLINE AND VALVES BY SHOWING EXACT MEASUREMENTS FROM HARD SURFACES.
7) ALL VALVES, GATE VALVES AND QUICK COUPLERS SHALL BE INSTALLED IN VALVE BOXES.
8) ANY PIPING SHOWN OUTSIDE THE PROPERTY LINE OR RUNNING OUTSIDE A LANDSCAPE AREA IS SHOWN THERE FOR CLARITY ONLY. ALL LINES SHALL BE INSTALLED ON THE PROPERTY AND INSIDE THE LANDSCAPE AREAS.
9) ALL RISERS SHALL BE INSTALLED 12" FROM ANY WALL AND A MINIMUM OF 12' FROM ANY SIDEWALK, PATIO OR ROAD.
10) THE EXACT HEIGHT OF ANY 12" POP-UP THAT IS SHOWN IN A SHRUB BED SHALL BE DETERMINED BY THE LANDSCAPE ARCHITECT IN THE FIELD.
11) THE CONTRACTOR SHALL EXERCISE CARE SO AS NOT TO DAMAGE ANY EXISTING UTILITIES. THE CONTRACTOR SHALL BE RESPONSIBLE FOR THE IMMEDIATE REPAIRS AND COST OF ANY DAMAGE CAUSED BY HIS WORK.
12) ALL WORK SHALL BE GUARANTEED FOR ONE YEAR FROM THE DATE OF FINAL ACCEPTANCE AGAINST ALL DEFECTS IN EQUIPMENT AND WORKMANSHIP.
13) ELECTRICAL SERVICE TO THE IRRIGATION CONTROLLER SHALL BE COORDINATED BY THE CONTRACTOR WITH THE OWNER OR HIS REPRESENTATIVE. POWER WIRING TO THE CONTROLLER SHALL BE PERFORMED BY A LICENSED ELECTRICIAN.
14) PIPING TO A SINGLE SPRAY HEAD SHALL BE 3/4" PVC CL-200 PIPE.

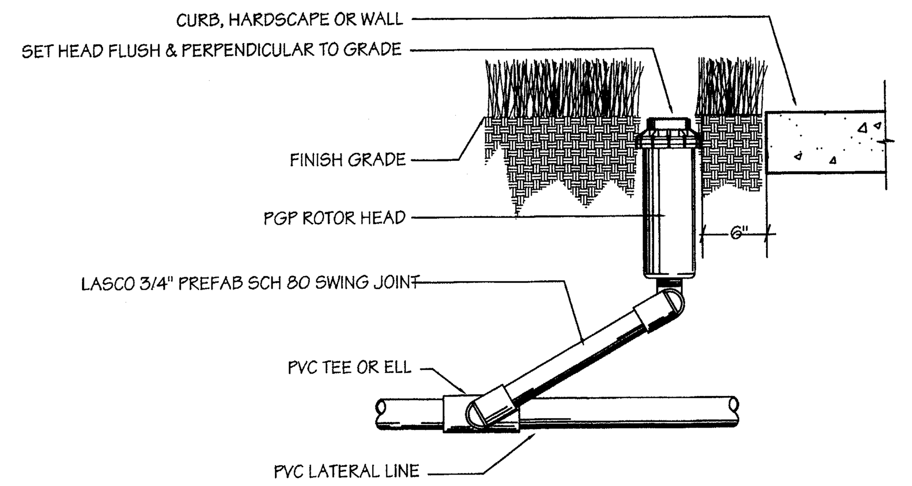

Pop-up Rotor Detail

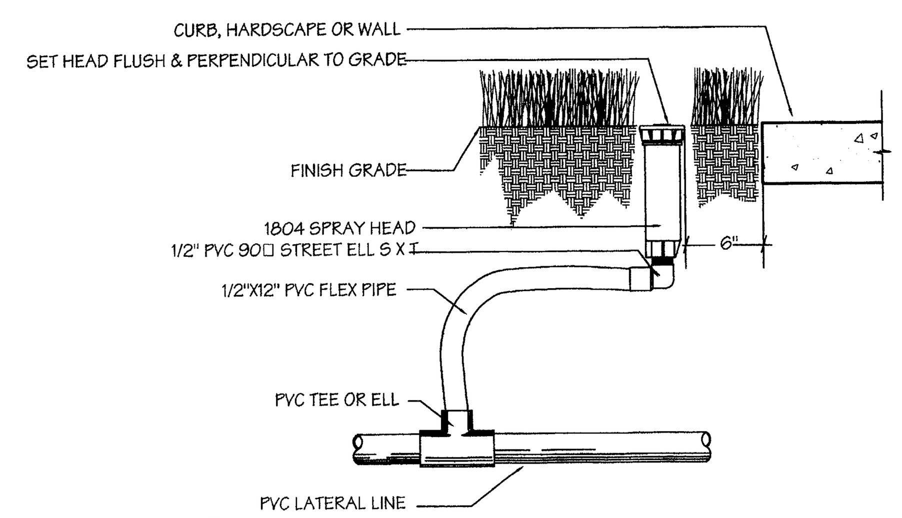

Toro 570Z-4P Spray Detail

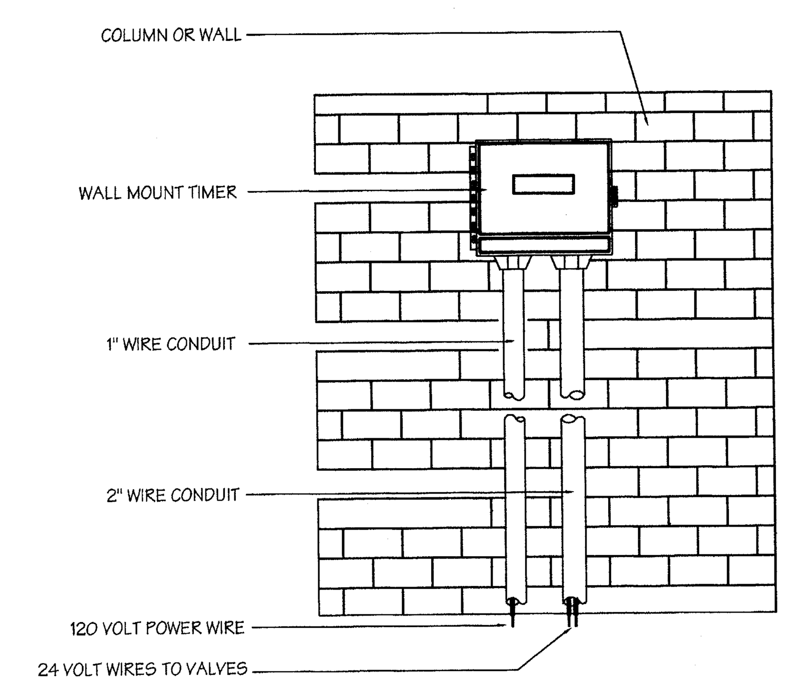

Wall Mount Controller

TORO

NOZZLE SELECTION CHART

SPEC. NO.	P.S.I.	G.P.M.	RADIUS	PATTERN
A 15-F	30	3.00	15'	FULL
B 15-TQ	30	2.60	15'	THREE QUARTER
C 15-TT	30	2.00	15'	TWO THIRD
D 15-H	30	1.65	15'	HALF
E 15-T	30	1.00	15'	ONE THIRD
F 15-Q	30	.85	15'	QUARTER
G 4-EST	30	.45	4'X15'	END STRIP
H 4-CST	30	.90	4'X30'	CENTER STRIP
J 4-SST	30	.90	4'X30'	SIDE STRIP
K 12-F	30	1.92	12'	FULL
L 12-TQ	30	1.55	12'	THREE QUARTER
M 12-TT	30	1.12	12'	TWO THIRD
N 12-H	30	.95	12'	HALF
P 12-T	30	.57	12'	ONE THIRD
R 12-Q	30	.50	12'	QUARTER
S 10-F	30	1.49	10'	FULL
T 10-H	30	.71	10'	HALF
U 10-Q	30	.40	10'	QUARTER
V 10-T	30	.52	10'	ONE THIRD
W 8-T	30	.52	8'	ONE THIRD
X 8-H	30	.50	8'	HALF
Y 8-Q	30	.40	8'	QUARTER
Z VAN	30	VARIES	VARIES	ADJUSTABLE

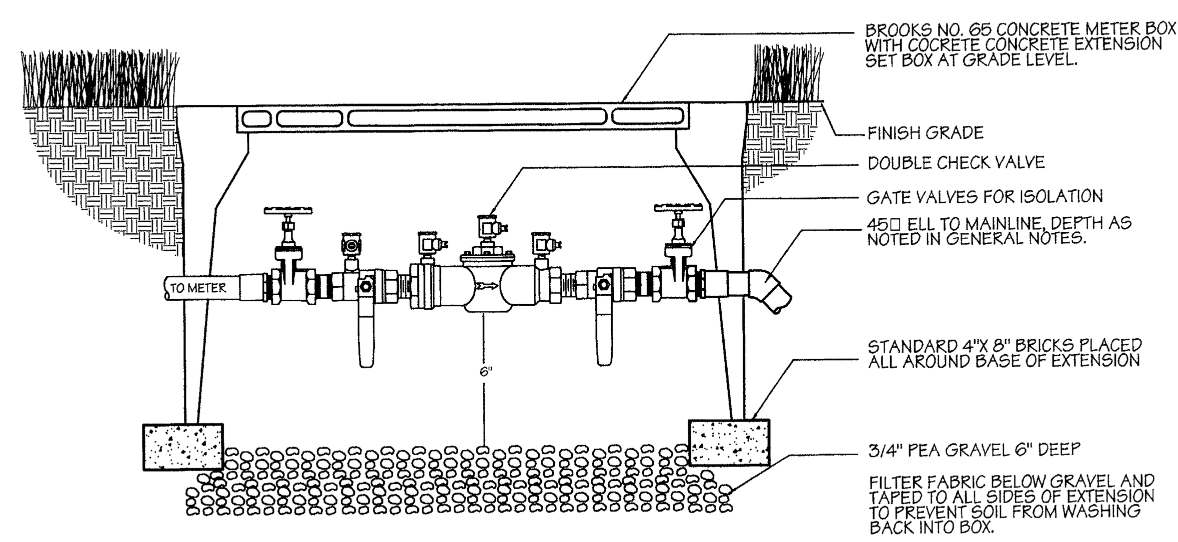

Double Check Backflow Preventer

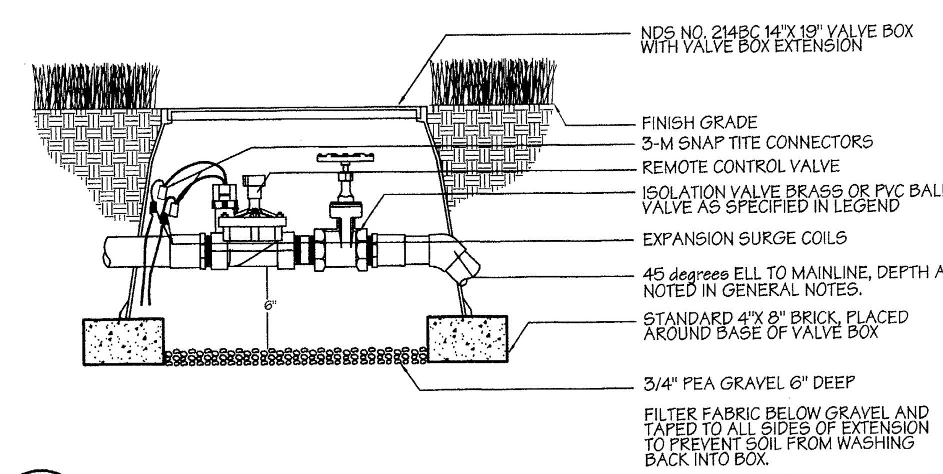

Weather Matic Remote Control Valve

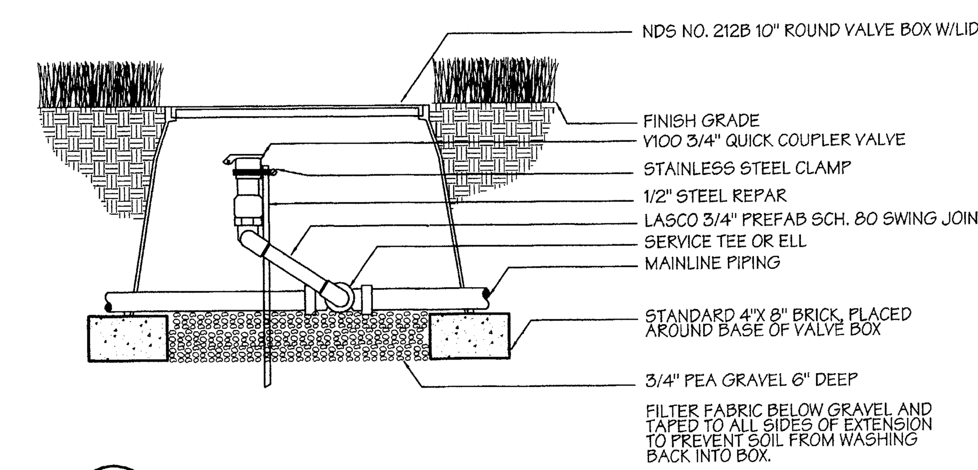

Quick Coupler Valve

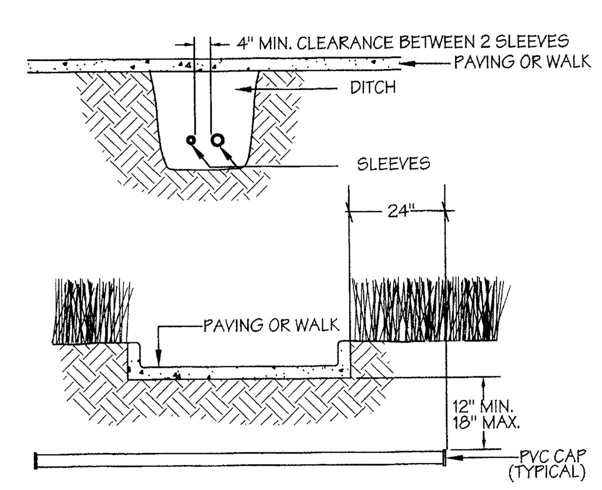

NOTES:
1. ALL PVC IRRIGATION SLEEVES TO BE SCH. 40 PIPE.
2. ALL JOINTS TO BE SOLVENT WELDED AND WATERTIGHT.
3. MECHANICALLY TAMP TO 95% PROCTOR.

Sleeve Detail

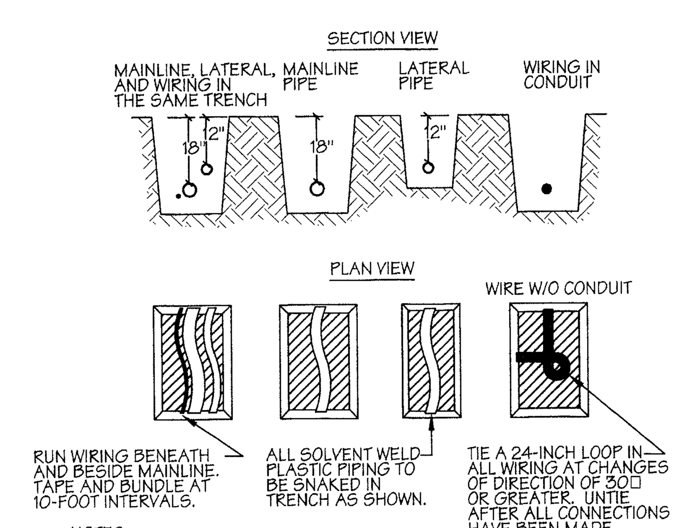

NOTES:
1. SLEEVE BELOW ALL HARDSCAPE ELEMENTS WITH SCH. 40 PVC TWICE THE DIAMETER OF THE PIPE OR WIRE BUNDLE WITHIN.
2. FOR PIPE AND WIRE BURIAL DEPTHS SEE SPECIFICATIONS.
2. ALL PVC PIPE SHALL BE SUPPORTED WITH CLEAN ROCK FREE FILL.

Pipe & Wire Trenching

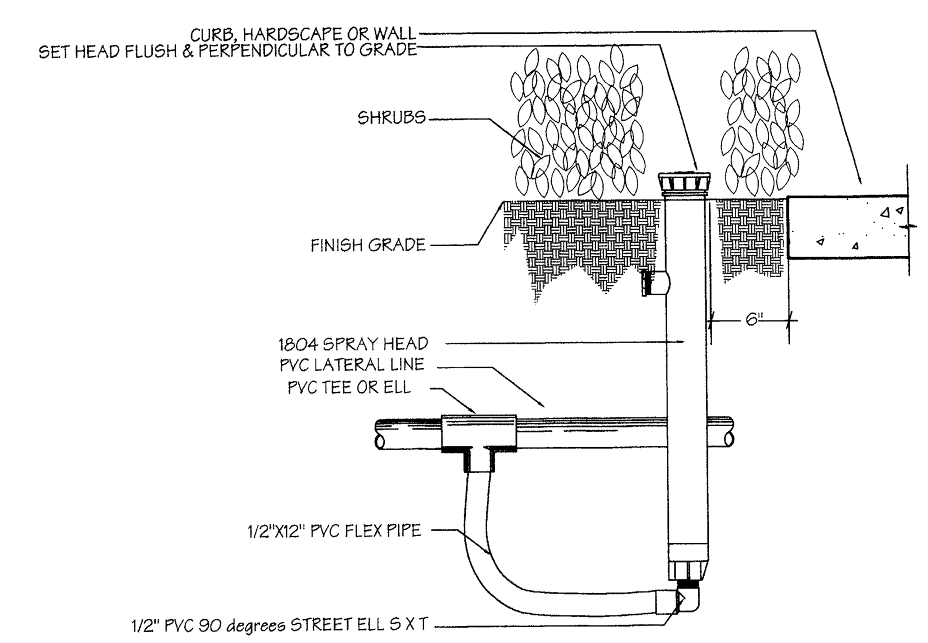

Toro 570Z-12P Spray Detail

ISSUE DATE
02-20-02 BID SET
REVISIONS

ADDISON ATHLETIC CLUB EXPANSION AND LEISURE POOL
ADDISON, TEXAS

RON HOBBS ARCHITECTS
614 W. MAIN ST. SUITE #200 GARLAND, TEXAS 75040
(972) 494-0174 FAX (972) 494-0722

DAVID C. BALDWIN INCORPORATED
LANDSCAPE ARCHITECTURE PLANNING
5744 RICHMOND AVENUE
DALLAS, TEXAS 75206
PH: 214.821.8100
FAX: 214.824.5562

STATE OF TEXAS
JOHN M. CALLANDER
5763
LICENSED IRRIGATOR

JOB NUMBER
IRRIGATION DETAILS
0012

SHEET NUMBER
L3.4

DAVID C. BALDWIN, INC. FILE
Time: 11:17 A.M. Drawing File: L3-3.DWG
Date: 02/20/2002 Scale: 1.0000=16.0000

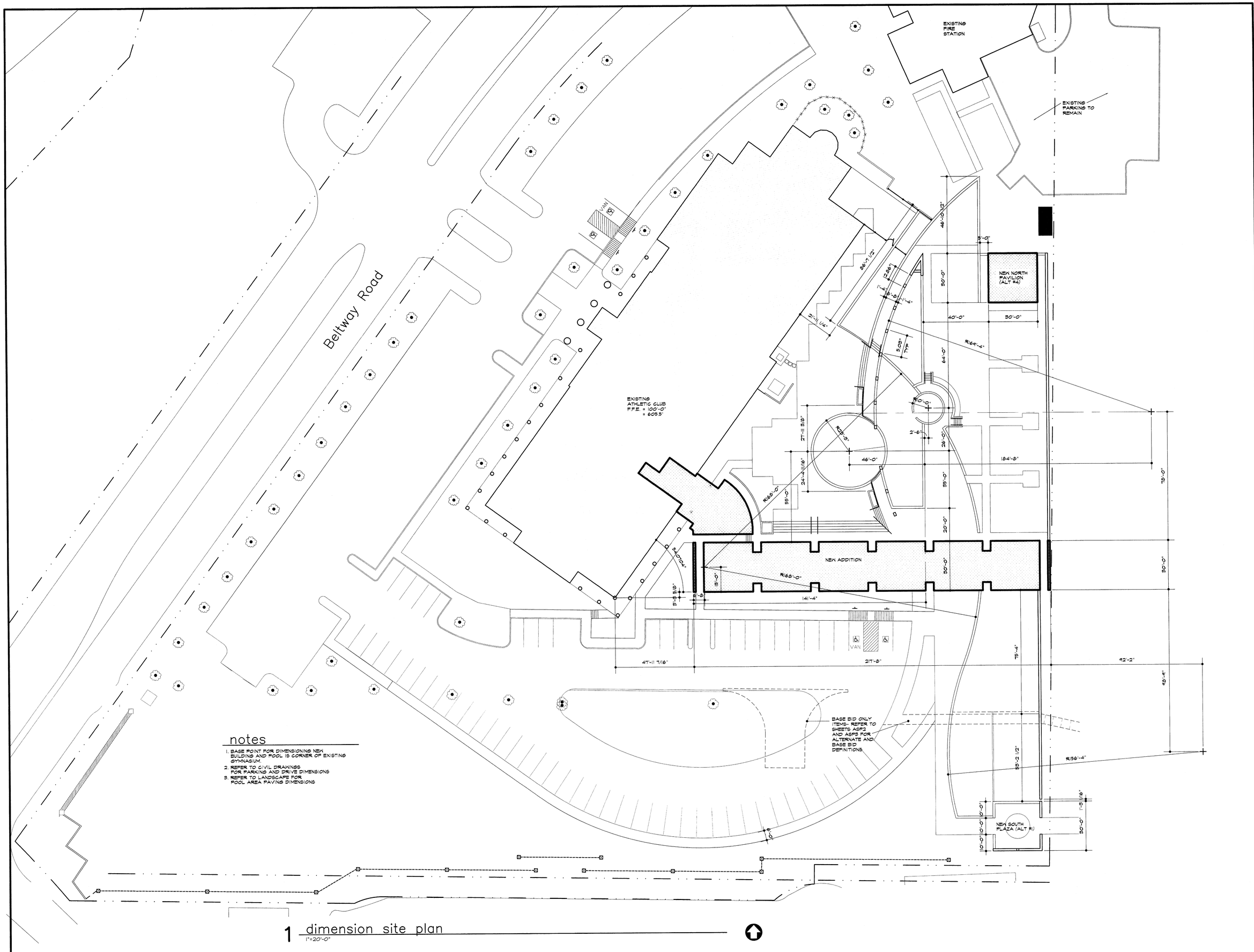

notes

1. BASE POINT FOR DIMENSIONING NEW BUILDING AND POOL IS CORNER OF EXISTING GYMNASIUM.
2. REFER TO CIVIL DRAWINGS FOR PARKING AND DRIVE DIMENSIONS
3. REFER TO LANDSCAPE FOR POOL AREA PAVING DIMENSIONS

1 dimension site plan
1"=20'-0"

ISSUE DATE
FEB. 20, 2002

REVISIONS

ADDISON ATHLETIC CLUB EXPANSION AND LEISURE POOL
ADDISON, TEXAS

RON HOBBS ARCHITECTS
614 W. MAIN ST. SUITE #200 GARLAND, TEXAS 75040
(972) 494-0174 FAX (972) 494-0722

REGISTERED ARCHITECT STATE OF TEXAS

JOB NUMBER
0012

SHEET NAME
DIMENSION SITE PLAN

SHEET NUMBER
ASP1

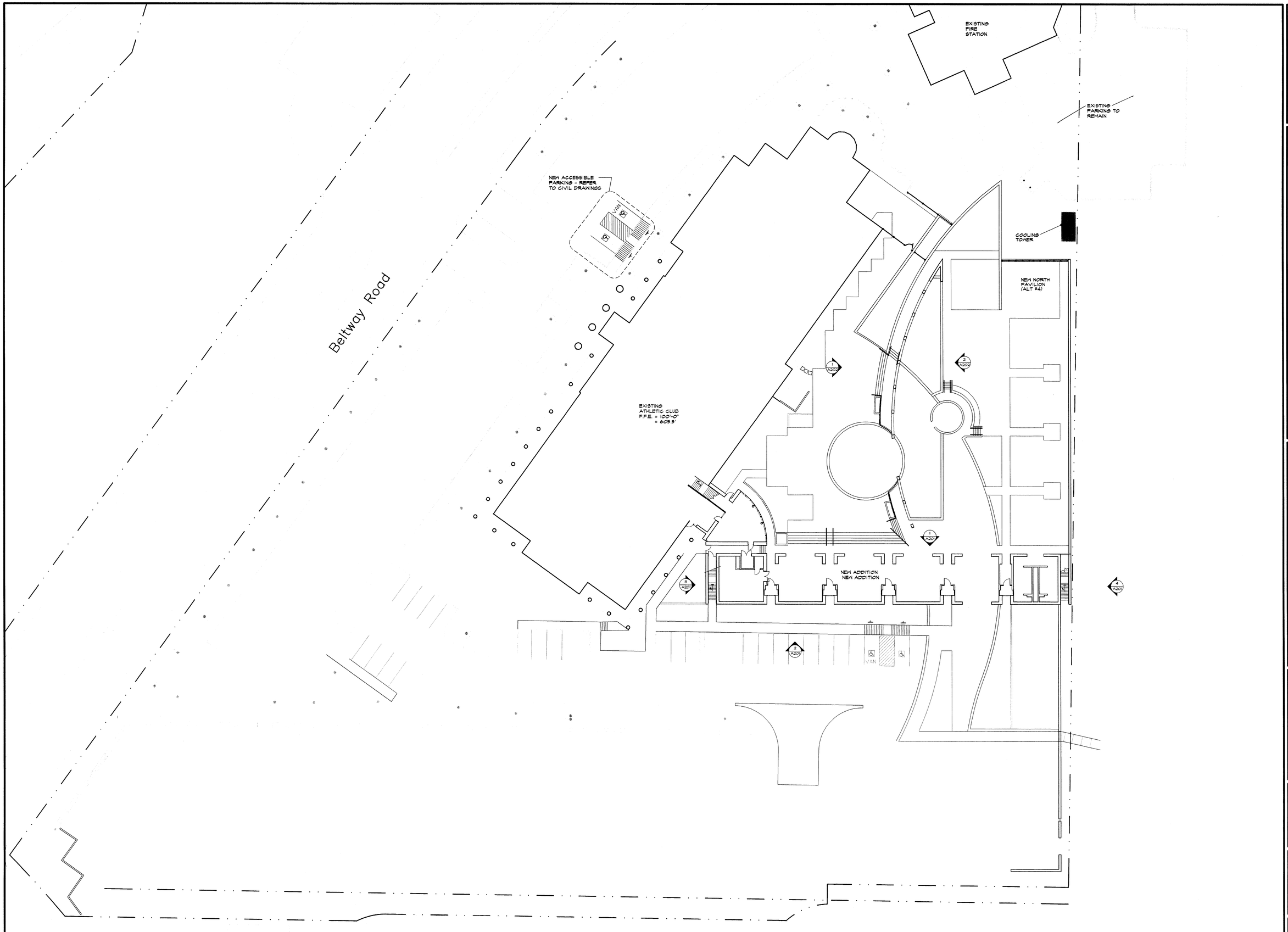

1 site plan– base bid
1"=20'-0"

ISSUE DATE
FEB. 20, 2002

REVISIONS

ADDISON ATHLETIC CLUB EXPANSION AND LEISURE POOL
ADDISON, TEXAS

RON HOBBS ARCHITECTS
614 W. MAIN ST. SUITE #203 GARLAND, TEXAS 75040
(972) 494-0174 FAX (972) 494-0722

JOB NUMBER
0012

SHEET NAME
BASE BID
SITE PLAN

SHEET NUMBER
ASP2

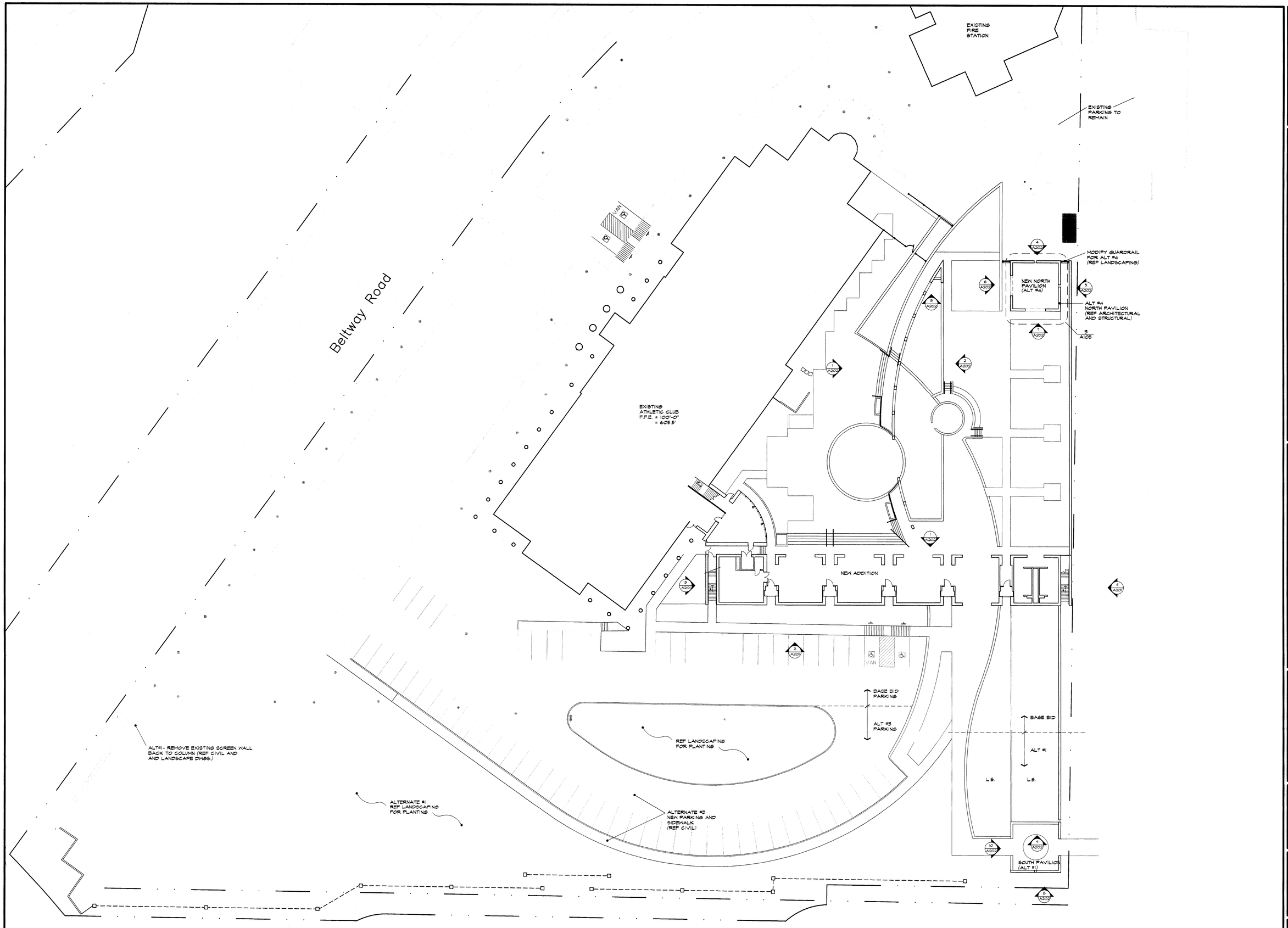

1 site plan – alternates
1"=20'-0"

ISSUE DATE
FEB. 20, 2002

REVISIONS

ADDISON ATHLETIC CLUB EXPANSION AND LEISURE POOL
ADDISON, TEXAS

RON HOBBS ARCHITECTS
614 W. MAIN ST. SUITE #200 GARLAND, TEXAS 75040
(972) 494-0174 FAX (972) 494-0722

REGISTERED ARCHITECT RONALD D. HOBBS STATE OF TEXAS

JOB NUMBER
0012

SHEET NAME
ALTERNATES SITE PLAN

SHEET NUMBER
ASP3

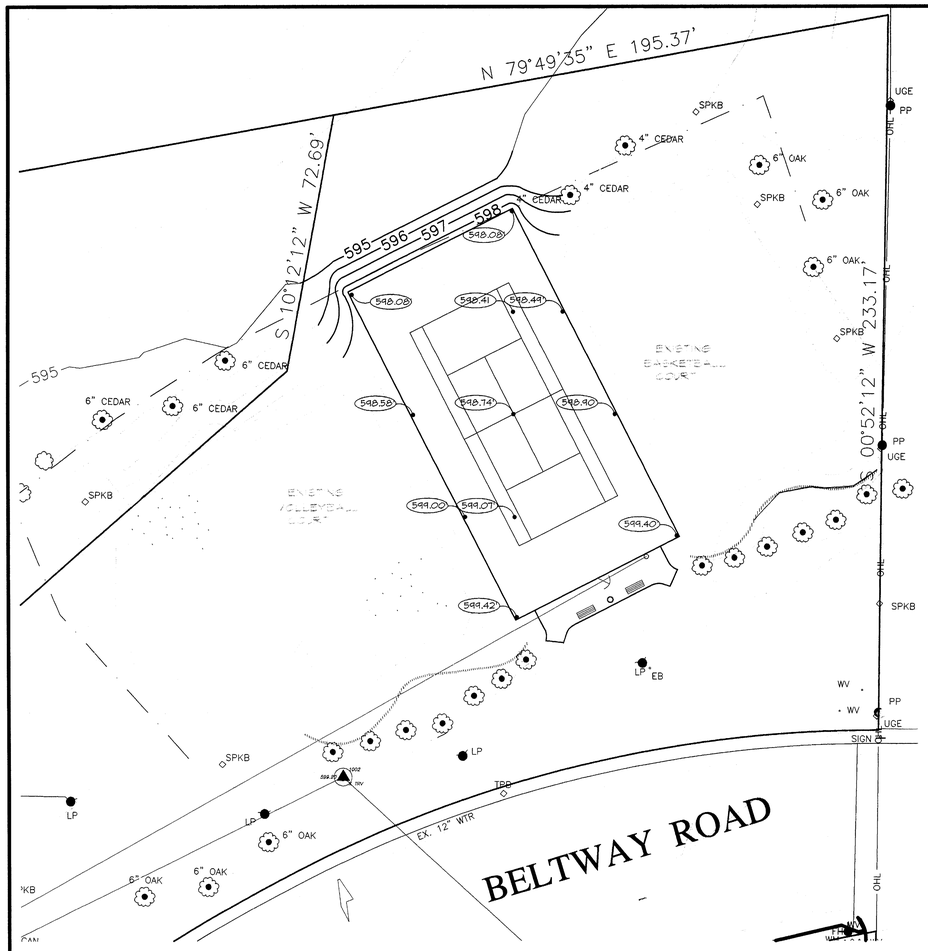

1 site plan – tennis court – alternate 5
1"=20'-0"

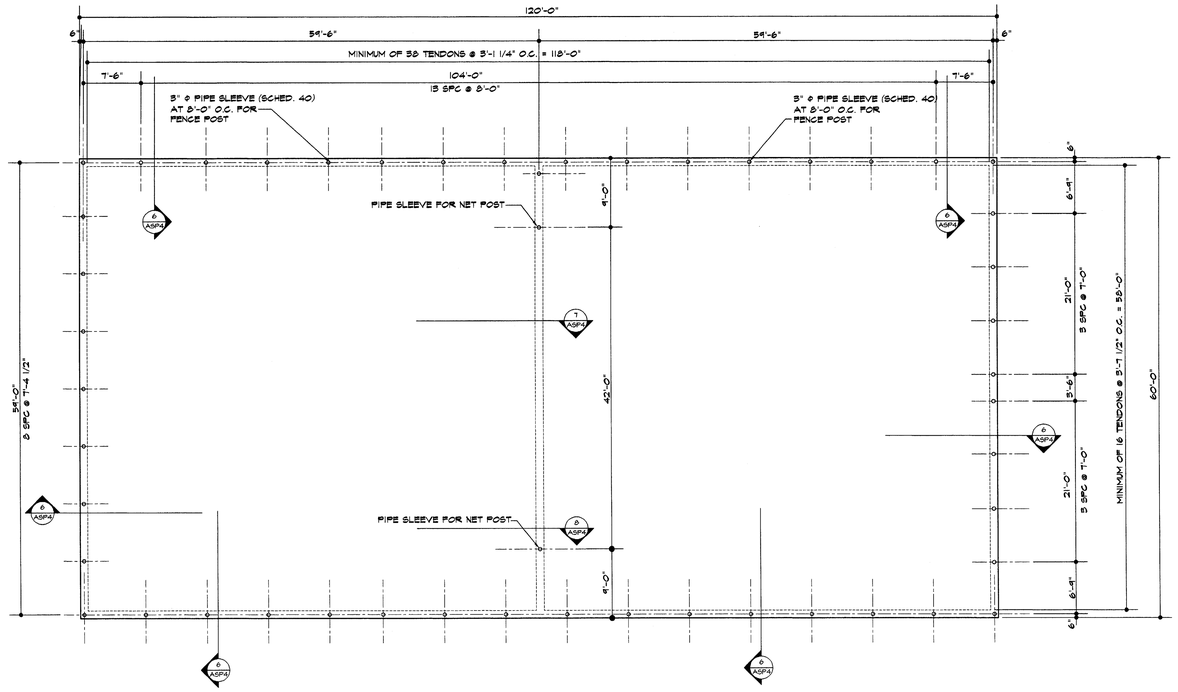

3 foundation plan – tennis court – alternate 5
1/8"=1'-0"

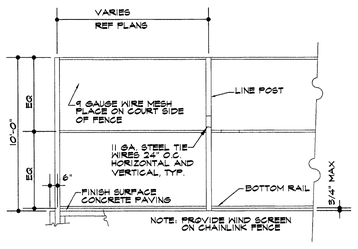

4 elevation – alternate 5
1/4"=1'-0"

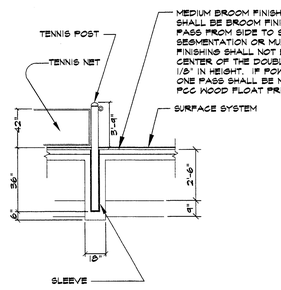

MEDIUM BROOM FINISH CONCRETE SURFACE. COURTS SHALL BE BROOM FINISHED WITH ONE CONTINUOUS PASS FROM SIDE TO SIDE. STOPPING, RESTARTING, SEGMENTATION OR MULTIPLE DIRECTIONS OF BROOM FINISHING SHALL NOT BE ALLOWED. RIDGES AT THE CENTER OF THE DOUBLE COURTS SHALL NOT EXCEED 1/8" IN HEIGHT. IF POWER TROWELS ARE USED ONLY ONE PASS SHALL BE MADE ACROSS THE SURFACE. FOG WOOD FLOAT PRIOR TO BROOM FINISH, ACID ETCH.

5 section – tennis court
1/4"=1'-0"

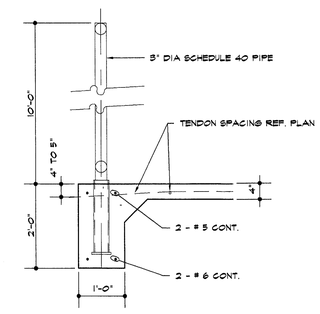

6 foundation details
3/4"=1'-0"

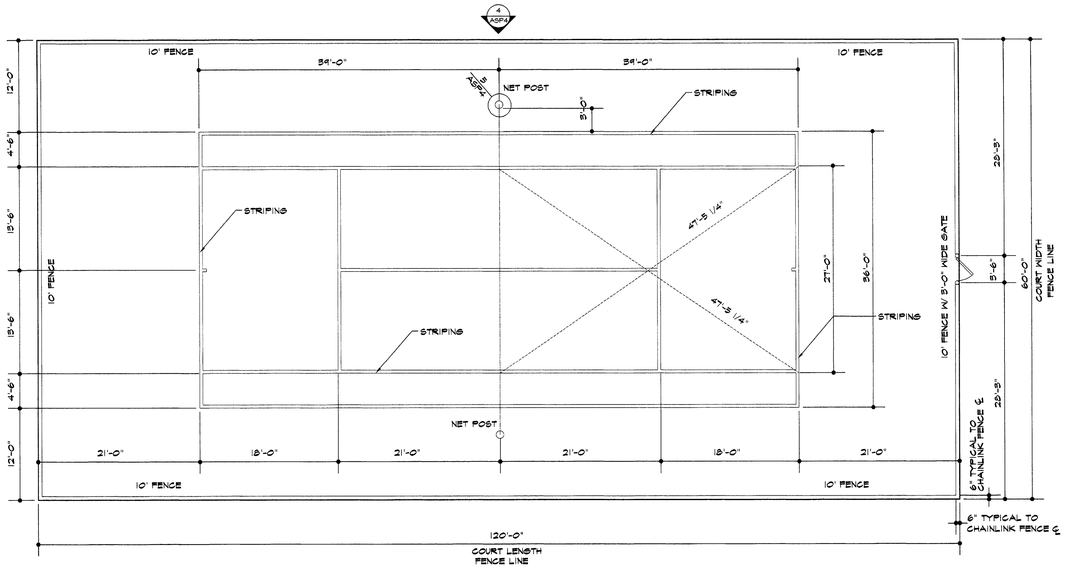

2 tennis court plan – alternate 5
1/8"=1'-0"

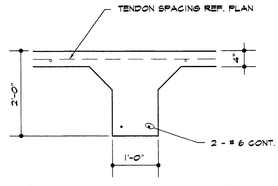

7 foundation details
3/4"=1'-0"

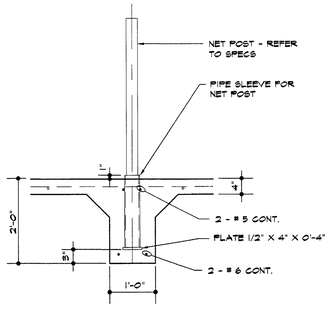

8 foundation details
3/4"=1'-0"

GENERAL POST-TENSION NOTES:

1. SCOPE OF WORK INCLUDES ALL DESIGN WORK, ENGINEERING, & CONSTRUCTION OF THE POST-TENSIONED SLAB AT THE TENNIS COURT.
2. THE POST-TENSIONING CONTRACTOR SHALL BE TOTALLY RESPONSIBLE FOR ALL ENGINEERING & DESIGN WORK ASSOCIATED WITH POST-TENSIONED CONCRETE SLAB & WILL BE CONSIDERED THE ENGINEER OF RECORD (EOR).
3. PRESTRESSING STEEL SHALL BE SEVEN-WIRE STRESS-RELIEVED STRAND FOR PRESTRESSED CONCRETE MANUFACTURED IN ACCORDANCE WITH ASTM A416 AND FREE FROM CORROSION. THE TENDONS SHALL HAVE THE FOLLOWING PROPERTIES:
   MINIMUM ULTIMATE TENSILE STRENGTH = 270 KSI.
   NOMINAL DIAMETER = 1/2 INCH
   AREA = .153 SQ. IN.
   MODULUS OF ELASTICITY = 28,000 KSI
   MAXIMUM TEMPORARY FORCE = 22.4 KIPS
   MINIMUM FINAL EFFECTIVE FORCE = 24.5 KIPS
4. STRAND SHALL BE COATED WITH A RUST PREVENTIVE MASTIC AND ENCLOSED IN AN EXTRUDED PLASTIC SLIPPAGE SHEATHING. TORN OR DAMAGED SHEATHING SHALL BE PATCHED BEFORE CASTING CONCRETE.
5. ALL ANCHORING HARDWARE SHALL MEET THE MINIMUM REQUIREMENTS SET FORTH IN ACI 318-99 SECTION 18.14.
6. TENDONS SHALL BE LOCATED AT LEAST 4 INCHES FROM ALL EDGES AND SLAB OPENINGS. PROVIDE MINIMUM 2 INCH CLEAR SPACE BETWEEN PARALLEL TENDONS IN SLABS.
7. WHERE SLAB TENDONS ARE INTERRUPTED BY OPENINGS IN THE SLAB NO MORE THAN THREE INTERRUPTED TENDONS SHALL BE DISTRIBUTED AROUND EACH SIDE OF THE OPENING. THE MAXIMUM LATERAL DISPLACEMENT OF ANY TENDON SHALL BE NO MORE THAT THREE FEET.
8. PROPER PLACEMENT OF POST-TENSIONING TENDONS SHALL HAVE PRIORITY OVER ANY TYPE OF CONDUIT AND ANY MILD STEEL REINFORCEMENT, UNLESS PRIOR APPROVAL BY THE STRUCTURAL ENGINEER IS OBTAINED.
9. SUFFICIENT SUPPORT STEEL SHALL BE PROVIDED. THESE BARS AND CHAIRS SHALL BE FIRMLY SECURED TO ASSURE THAT THE PROPER TENDON PROFILE IS MAINTAINED AND LATERAL TENDON MOVEMENT IS PREVENTED DURING CONCRETE PLACEMENT.

GENERAL CONCRETE NOTES:

1. CONCRETE WORK SHALL BE EXECUTED IN STRICT ACCORDANCE WITH THE LATEST AMERICAN CONCRETE INSTITUTE BUILDING CODE (ACI 318).
2. CONCRETE SPECIFICATIONS SHALL BE AS FOLLOWS:

LOCATIONS	28 DAY STRENGTH	AGGREGATE	SLUMP
ALL	4000 PSI	HARD ROCK	3" TO 4"

3. USE MAXIMUM COURSE AGGREGATE SIZE OF 1 1/4" AND AGGREGATES SHALL MEET ASTM C 131 FOR RESISTANCE TO ABRASION AND C 33 FOR GRADING.
4. ALL CONCRETE EXPOSED TO THE WEATHER SHALL HAVE 5% TO 6% AIR ENTRAINMENT.
5. CONSTRUCTION JOINTS WHEN NECESSARY, SHALL OCCUR NEAR THE MIDDLE OF THE SPAN UNLESS A BEAM INTERSECTS AT THIS POINT, IN WHICH CASE THE JOINT SHALL BE OFFSET A DISTANCE EQUAL TO TWICE THE WIDTH OF THE BEAM. ENGINEER SHALL APPROVE PROVISIONS FOR TRANSFER OF SHEAR AND OTHER FORCES THROUGH THE JOINT.
6. FINISH SHELL BE BROOM FINISH.

GENERAL REINFORCEMENT NOTES:

1. ALL REINFORCEMENT SHALL CONFORM TO ASTM A-615 GRADE 60.
2. REINFORCING STEEL SHALL BE DESIGNED, DETAILED, FABRICATED AND PLACED IN ACCORDANCE WITH THE LATEST ACI "MANUAL OF STANDARD PRACTICE FOR DETAILING REINFORCED CONCRETE STRUCTURES (ACI-315) AND THE CRSI "RECOMMENDED PRACTICE FOR PLACING REINFORCING BARS" LATEST EDITION.
3. SPLICES IN REINFORCEMENT SHALL OCCUR AT POINTS OF MINIMUM STRESS AND LAP 30 BAR DIAMETERS MINIMUM UNLESS NOTED.
4. MINIMUM CONCRETE COVER FOR REINFORCEMENT SHALL BE AS FOLLOWS:
   GRADE BEAMS ... 3" FROM BOTTOM
   ... 2" FROM TOP AND SIDES
   SLABS ON GRADE ... 1 1/2" FROM TOP
5. PROVIDE CORNER BARS AT ALL CORNERS SAME SIZE AND SPACING AS LARGER REINFORCEMENT.

NOTE:

1. PROTECT SLAB FROM SHRINKAGE CRACKING DURING CURING PROCESS. USE CURING COMPOUND OR COVER MATERIAL
2. INSTALL VAPOR BARRIER.
3. SURFACE VARIATION NOT TO EXCEED 1/8" IN 10'-0" WHEN MEASURED IN ANY DIRECTION WITH STAIGHT EDGE OR SLOPE 1" IN 10'-0" ALL IN ONE PLANE.

ISSUE DATE
FEB. 20, 2002

REVISIONS

ADDISON ATHLETIC CLUB EXPANSION AND LEISURE POOL
ADDISON, TEXAS

RON HOBBS ARCHITECTS
614 W. MAIN ST. SUITE 6200 GARLAND, TEXAS 75040
(972) 494-0174 FAX (972) 494-0722

JOB NUMBER
0012

SHEET NAME
DIMENSION SITE PLAN

SHEET NUMBER
ASP4

wall legend

EXISTING TO REMAIN

EXISTING TO BE DEMOLISHED

schedule notes

1. 1/4" CLEAR TEMPERED GLASS
2. 1/4" TINTED TEMPERED GLASS
3. ALL DIMENSIONS ARE TO FACE OF FINISH MATERIAL UNLESS NOTED OTHERWISE.
4. 1 HOUR RATED U.L. PARTITION.
5. MATCH CARPET WITH EXISTING LOBBY CARPETING.

DEMOLITION NOTES:

1. REFER TO SPECIFICATION SECTION 02100-DEMOLITION.
2. DEMOLITION DRAWINGS ARE PROVIDED FOR GENERAL INFORMATION ONLY AND ARE NOT INTENDED TO SERVE AS A COMPLETE GUIDE FOR THE DEMOLITION WORK. THE DRAWINGS DO NOT ATTEMPT TO DESCRIBE IN DETAIL THE FULL EXTENT OF THE DEMOLITION WORK REQUIRED.
3. DOTTED LINES INDICATE WALLS, PLUMBING FIXTURES, DOORS, WINDOWS TO BE REMOVED.
4. THE CONTRACTOR SHALL BE RESPONSIBLE FOR DETERMINING THE EXACT LOCATION AND QUANTITIES TO BE DEMOLISHED.
5. THE CONTRACTOR SHALL REMOVE SURFACES AND MATERIALS AS REQUIRED TO INSTALL ALL NEW WORK.
6. DEMOLITION WORK WILL INCLUDE, BUT NOT BE LIMITED TO THE FOLLOWING:
   - A. REMOVE THE EXISTING EXTERIOR WALLS AND DOORS OF VESTIBULE NEAR GYM.
   - B. REMOVE EXISTING STAIRS BETWEEN RACQUETBALL COURT AND GYM- RISERS, LANDINGS, HANDRAILS AND ACCESSORIES.
   - C. REMOVE ALL EXISTING PARTITIONS IN OTHER AREAS OF THE BUILDING AS REQUIRED TO INSTALL, CONSTRUCT, OR ERECT NEW WALLS, PARTITIONS, OR OTHER IMPROVEMENTS.
   - D. REMOVE ELECTRIC WATER COOLER AT LOWER LEVEL NEAR STAIR. ADAPT PLUMBING PER NEW PLUMBING PLANS TO CONNECT TO NEW SINKS IN MULTIPURPOSE ROOM. CONNECTION MAY REQUIRE TRENCHING IN CONCRETE FLOOR AND RUNNING PLUMBING ABOVE EXISTING FIRST FLOOR CEILING. E/C ON SECOND LEVEL TO REMAIN.
   - E. REMOVE EXISTING EXTERIOR CANOPY/ROOF OVER BACK ENTRANCE TO CLUB.
   - F. REMOVE EXISTING WOOD DOOR PANELS BETWEEN COLUMNS AT MULTIPURPOSE ROOM (EXISTING WEIGHT ROOM.)
   - G. REMOVE EXISTING MIRRORS ON WALLS OF MULTIPURPOSE ROOM (EXISTING WEIGHT ROOM.) PATCH & PAINT WALLS AS REQUIRED.
7. WHERE EXISTING PLUMBING FIXTURES HAVE BEEN REMOVED, CAP AND SEAL WATER LINES, SEWER LINES, AND VENT STACKS NOT SCHEDULED TO REMAIN.
8. REMOVE (TEMPORARILY) AND SALVAGE EXISTING FLOORING MATERIALS IN EXERCISE ROOM AS REQUIRED TO INSTALL NEW CABINETS AND FOLDING PARTITION. REINSTALL EXISTING FLOORING THAT IS REMOVED TO INSTALL NEW CABINETS, FOLDING WALL, AND DOOR/WINDOW WALL.
9. TEMPORARILY REMOVE EXISTING CEILING TILES (AND GRID IF NECESSARY) TO INSTALL NEW ABOVE CEILING UTILITIES, ELECTRICAL, LIGHTS, A/C, ETC. REPLACE EXISTING CEILING TILES AND GRID UPON COMPLETION OF ABOVE CEILING WORK.

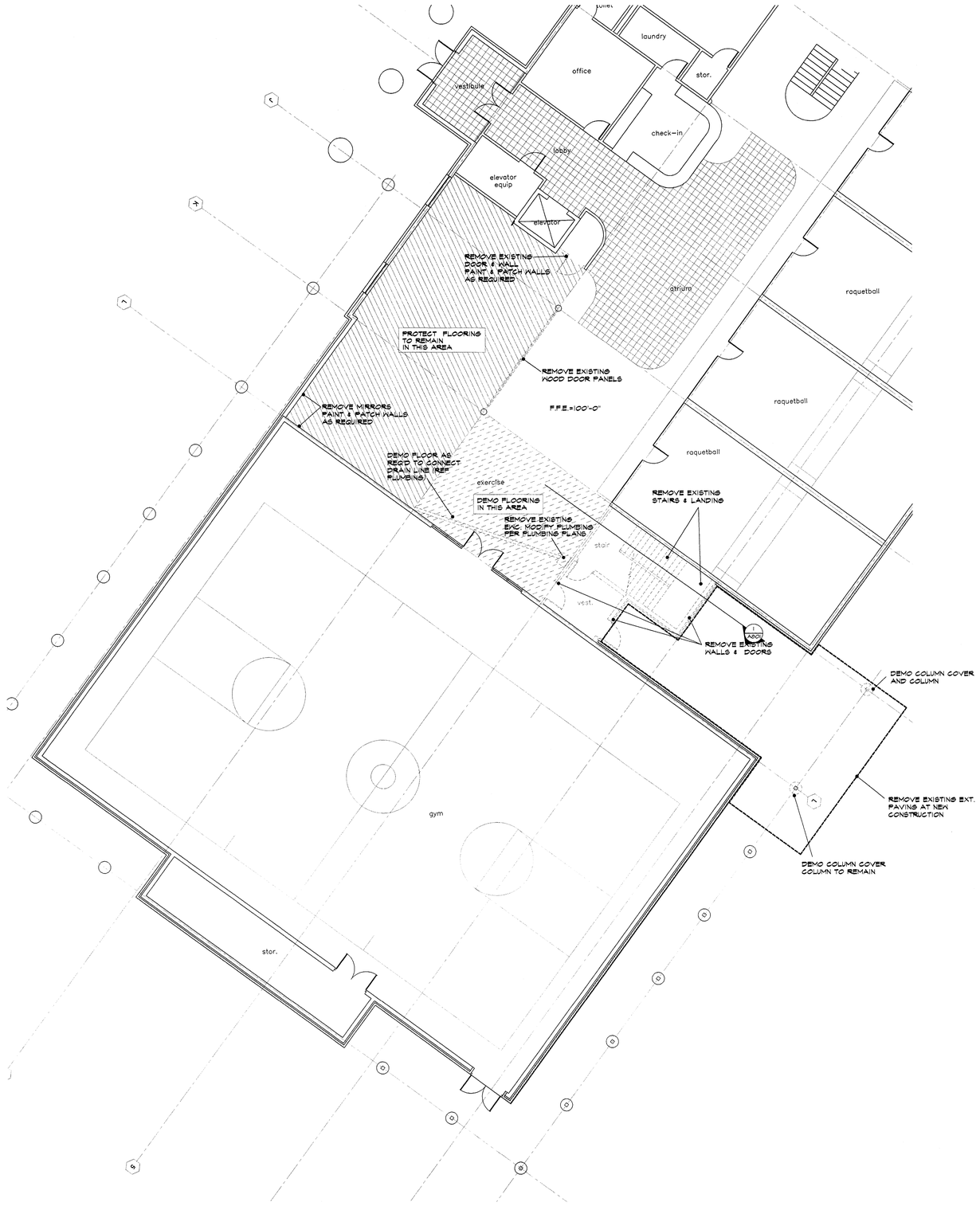

1 lower level demo floor plan
1/8"=1'-0"

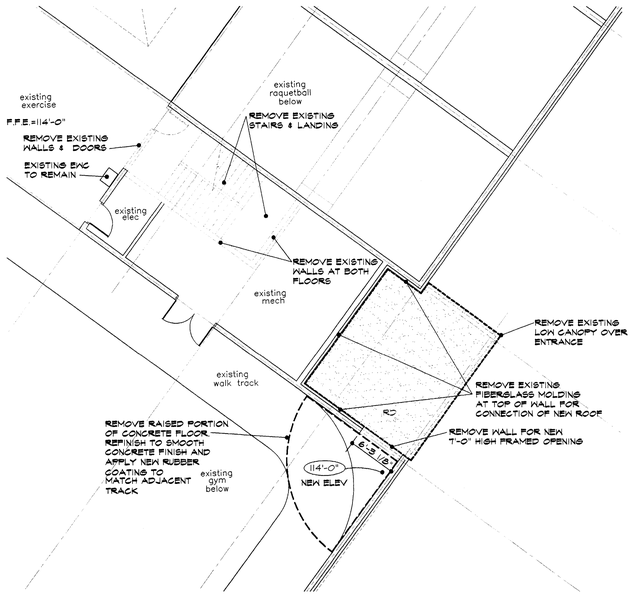

2 upper level demo floor plan
1/8"=1'-0"

ISSUE DATE
FEB. 20, 2002

REVISIONS

ADDISON ATHLETIC CLUB EXPANSION
AND
LEISURE POOL
ADDISON, TEXAS

RON HOBBS ARCHITECTS
614 W. MAIN ST. SUITE #200 GARLAND, TEXAS 75040
(972) 494-0374 FAX (972) 494-0722

REGISTERED ARCHITECT RONALD R. HOBBS STATE OF TEXAS

JOB NUMBER
0012

SHEET NAME

SHEET NUMBER
D101

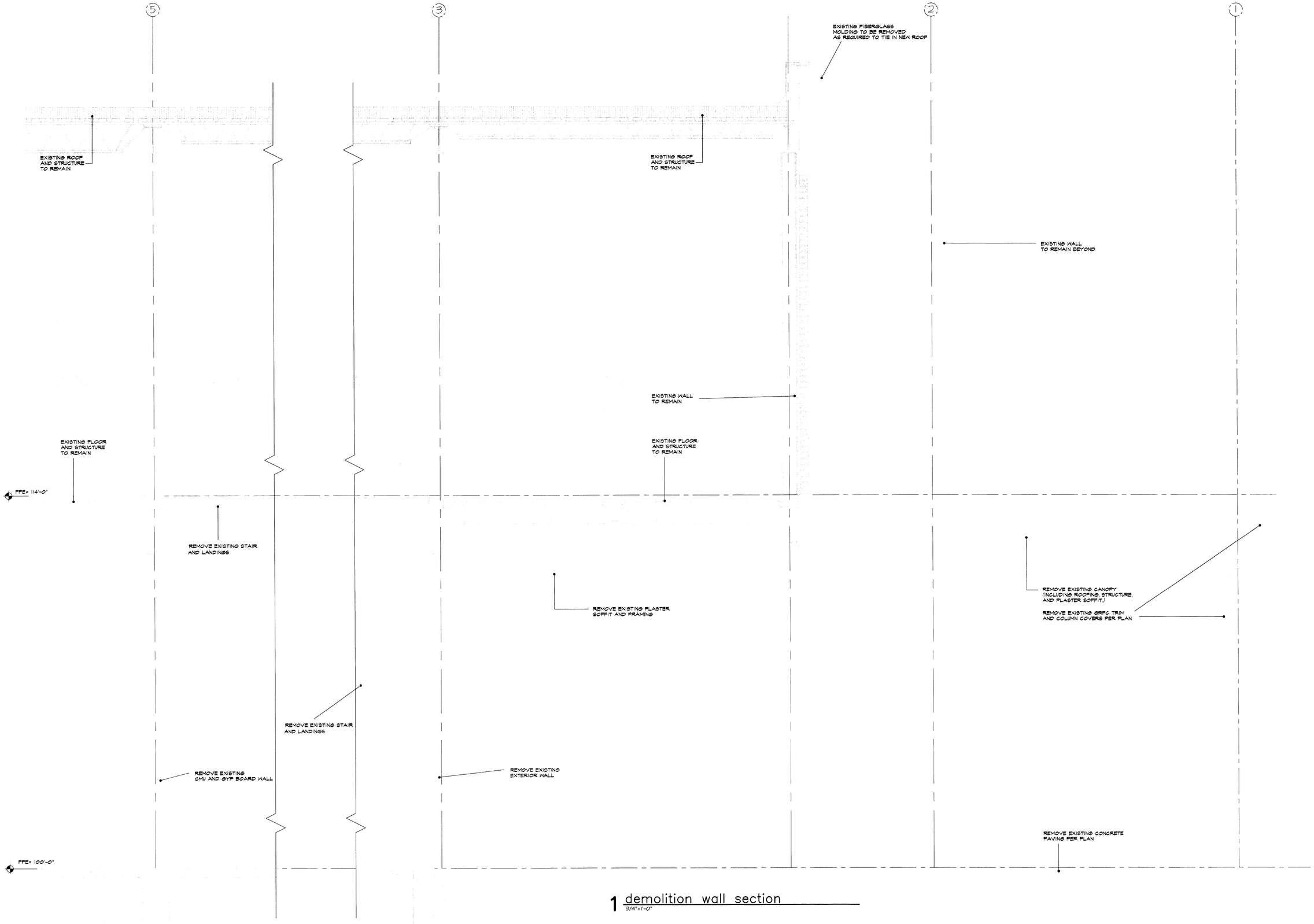

1 demolition wall section
3/4"=1'-0"

ISSUE DATE
FEB. 20, 2002

REVISIONS

ADDISON ATHLETIC CLUB EXPANSION
AND
LEISURE POOL
ADDISON, TEXAS

RON HOBBS ARCHITECTS
614 W. MAIN ST. SUITE 4200 GARLAND, TEXAS 75040
(972) 494-0174 FAX (972) 494-0722

REGISTERED ARCHITECT
RONALD L. HOBBS
STATE OF TEXAS

JOB NUMBER
0012

SHEET NAME
3/4" SCALE
DEMOLITION
SECTION

SHEET NUMBER
D801

ROOM FINISH SCHEDULE – FIRST FLOOR

ROOM NO.	ROOM NAME	FLOOR	BASE	CEILING	CLG. HGT.	WALLS NORTH	NE	EAST	SE	SOUTH	SW	WEST	NW	REMARKS
101	MEN	SC	-	CP	10'-8 5/8"	CMU-S	-	CMU-S	-	CMU-S	-	CMU-S	-	-
102	WOMEN	SC	-	CP	10'-8 5/8"	CMU-S	-	CMU-S	-	CMU-S	-	CMU-S	-	-
103	MECHANICAL	CONC	-	CONC	10'-8 5/8"	CMU	-	CMU	-	CMU	-	CMU	-	-
104	VENDING	CONC	-	CP	10'-8 5/8"	CMU	-	CMU	-	CMU	-	CMU	-	-
105	ENTRY	CONC	-	CP	10'-8 5/8"	CMU	-	CMU	-	CMU	-	CMU	-	-
106	MECHANICAL	CONC	-	CONC	10'-8 5/8"	CMU	-	CMU	-	CMU	-	CMU	-	-
107	PICNIC	CONC	-	CP	10'-8 5/8"	CMU	-	CMU	-	CMU	-	CMU	-	-
108	MECHANICAL	CONC	-	CONC	10'-8 5/8"	CMU	-	CMU	-	CMU	-	CMU	-	-
109	PICNIC	CONC	-	CP	10'-8 5/8"	CMU	-	CMU	-	CMU	-	CMU	-	-
110	MECHANICAL	CONC	-	CONC	10'-8 5/8"	CMU	-	CMU	-	CMU	-	CMU	-	-
111	PICNIC	CONC	-	CP	10'-8 5/8"	CMU	-	CMU	-	CMU	-	CMU	-	-
112	MECHANICAL	CONC	-	CONC	10'-8 5/8"	CMU	-	CMU	-	CMU	-	CMU	-	-
113	POOL EQUIPMENT	SC	-	CP	10'-8 5/8"	CMU-S	-	CMU-S	-	CMU-S	-	CMU-S	-	-
114	CO2	SC	-	CP	12'-8 5/8"	CMU-S	-	CMU-S	-	CMU-S	-	CMU-S	-	-
115	CHLORINE	SC	-	CP	10'-8 5/8"	CMU-S	-	CMU-S	-	CMU-S	-	CMU-S	-	-
116	STAFF AREA	SC	R	CP	12'-8 5/8"	-	CONC/TG	-	-	-	-	FGB	FGB/CG	1
117	VESTIBULE	SC	R	FBG	8'-0"	-	FGB	-	-	-	FGB	-	FGB	-
118	STAIR	C-1	R	FGB	24'-0"	-	FGB	-	-	-	FGB	-	-	-
119	HALL	C-3	WD	FGB	10'-0"	-	FGB	-	FGB/CG	-	FGB/TG	-	FGB	1
120	HALL	C-3	WD	FGB	10'-0"	-	FGB	-	-	-	FGB	-	-	-
121	MULTI-PURPOSE	EX	EX	EX	10'-0"	-	FGB	-	FGB/CG	-	FGB	-	FGB	6
122	MULTI-PURPOSE	EX	EX	EX	10'-0"	-	FGB	-	FGB/CG	-	FGB	-	FGB/TG	6
123	STORAGE	EX	EX	EX	10'-0"	-	FGB	-	FGB	-	FGB	-	FGB/TG	6
124	EXERCISE	C-3	WD	EX	EX	-	-	-	-	EX	-	EX	-	-
125	MECHANICAL	SC	R	EG	VARIES	-	FGB	-	FGB	-	FGB	-	FGB	-

schedule legend

AC = ACOUSTICAL CEILING TILE
AG = ALUMINUM & GLASS
ALUM = ALUMINUM
C-1 = CARPET TYPE 1
C-2 = CARPET TYPE 2
C-3 = CARPET TYPE 3
CG = CLEAR GLASS
CONC = CONCRETE
CP = CONCRETE - PAINTED
CMU = CONCRETE MASONRY UNIT
CMU-S = CONCRETE MASONRY UNIT - SEALED
EX = EXISTING TO REMAIN
HM = HOLLOW METAL
FGB = PAINTED GYPSUM BOARD
R = RUBBER
SC = SEALED CONCRETE
SCW = SOLID CORE WOOD
SG = STEEL GATE
STL = STEEL
TG = TINTED GLASS
WD = WOOD

legend

C.J. = CONTROL JOINT

wall legend

CONCRETE
CMU
FACE BRICK
GYP. BD. ON METAL STUDS
EXISTING WALL

schedule notes

1. 1/4" CLEAR TEMPERED GLASS
2. 1/4" TINTED TEMPERED GLASS
3. ALL DIMENSIONS ARE TO FACE OF FINISH MATERIAL UNLESS NOTED OTHERWISE.
4. PROVIDE LATCH FOR PADLOCK.
5. OPERABLE PORTION 7'-0" TALL.
6. REPAINT WALLS IN EXISTING ROOM.
7. 4" HEAD
8. PROVIDE WEATHERSTRIPPING.
9. INSTALL CERAMIC TILE TO 7'-2" WITH PAINTED GYP. BOARD ABOVE.
10. INOPERABLE DOOR

bath & access. legend

(A) TOILET PAPER DISPENSER
(B) GRAB BAR
(C) FRAMED MIRROR (STAINLESS STEEL)
(D) FEMININE NAPKIN DISPOSAL
(E) FRAMED MIRROR (GLASS)
(F) TOWEL DISPENSER & WASTE RECEPTACLE
(G) SOAP DISPENSER - WALL MOUNTED
(H) UNFRAMED MIRROR
(I) MOP & BROOM HOLDER
(J) CHANGING TABLE
(K) SHOWER ACCESSORIES
(L) ELECTRIC HAND DRYER
(X) FIRE EXTINGUISHER
(Y) DEDICATION PLAQUE

DOOR SCHEDULE– FIRST FLOOR

NO.	SIZE	TYPE	FRAME	ELEV.	HDW. SET	DETAILS JAMB	JAMB	HEAD	THRES.	REMARKS
101	4'-0"x7'-0"	HM	HM	B	D	4/A902	4/A902	4B1M/A902	-	8
102	17'-4"x9'-4 3/8"	OH	STL	G	-	5/A903	5/A903	2/A804	-	-
103	3'-0"x7'-0"	HM	HM	B	D	4/A902	4/A902	4B1M/A902	-	8
104	4'-0"x7'-0"	HM	HM	B	D	4/A902	4/A902	4B1M/A902	-	8
105	4'-0"x7'-0"	HM	HM	B	D	4/A902	4/A902	4B1M/A902	-	7, 8
106	4'-0"x7'-0"	HM	HM	B	D	4/A902	4/A902	4B1M/A902	-	8
107	6'-0"x7'-0"	HM	HM	C	C	8/A902	8/A902	21/A903	-	8
107a	6'-0"x7'-0"	HM	HM	C	C	8/A902	8/A902	21/A903	-	8
107b	3'-0"x7'-0"	HM	HM	B	I	17/A902	17/A902	17 B1M/A902	-	-
108	3'-0"x7'-0"	SG	STL	F	-	18/A902	4/A902	-	-	4
109	3'-0"x7'-0"	SG	STL	F	-	18 B1M/A902	4/A902	-	-	4
110	3'-0"x7'-0"	HM	HM	B	B	7/A902	7/A902	27/A808	17/A901	8
111	3'-0"x7'-0"	SCW	HM	B	E	5/A902	4/A902	3B1M/A902	-	-
112	3'-0"x7'-2"	AG	ALUM	D	A	20/A902	21/A902	2B1M/A902	18/A901	2
113	3'-0"x7'-0"	AG	ALUM	D	B	1/A903	1/A903	21B1M/A902	18/A901	2
114	4'-8"x9'-4"	HM	HM	A	D	2/A903	12B1M/A903	12B1M/A903	-	3
115	2'-8"x7'-0"	HM	HM	B	I	13/A903	13/A903	15B1M/A903	-	
116	3'-0"x7'-0"	SCW	WD	H	-	6/A903	4/A903	25/A903	-	10
117	6'-0"x7'-0"	SCW	WD	E	F	4/A903	4/A903	25/A903	-	
118	3'-0"x7'-0"	SCW	WD	H	-	7/A903	4/A903	25/A903	-	10
119	3'-0"x7'-0"	SCW	WD	H	-	7/A903	8/A903	19/A903	-	10
120	3'-0"x7'-0"	SCW	WD	H	-	4/A903	8/A903	19/A903	-	10
121	6'-0"x7'-0"	SCW	WD	E	F	4/A903	4/A903	19/A903	-	
122	3'-0"x7'-0"	SCW	WD	G	-	4/A903	8/A903	19/A903	-	10
123	3'-0"x7'-0"	SCW	WD	H	-	8/A903	17B1M/A903	19/A903	-	10
124	6'-0"x7'-0"	SCW	HM	C	G	11/A903	11/A903	11B1M/A903	-	
125	6'-0"x7'-0"	SCW	HM	C	G	11/A903	11/A903	11B1M/A903	-	
126	3'-0"x7'-0"	SCW	HM	B	J	11/A903	11/A903	11B1M/A903	-	

door elevations
not to scale

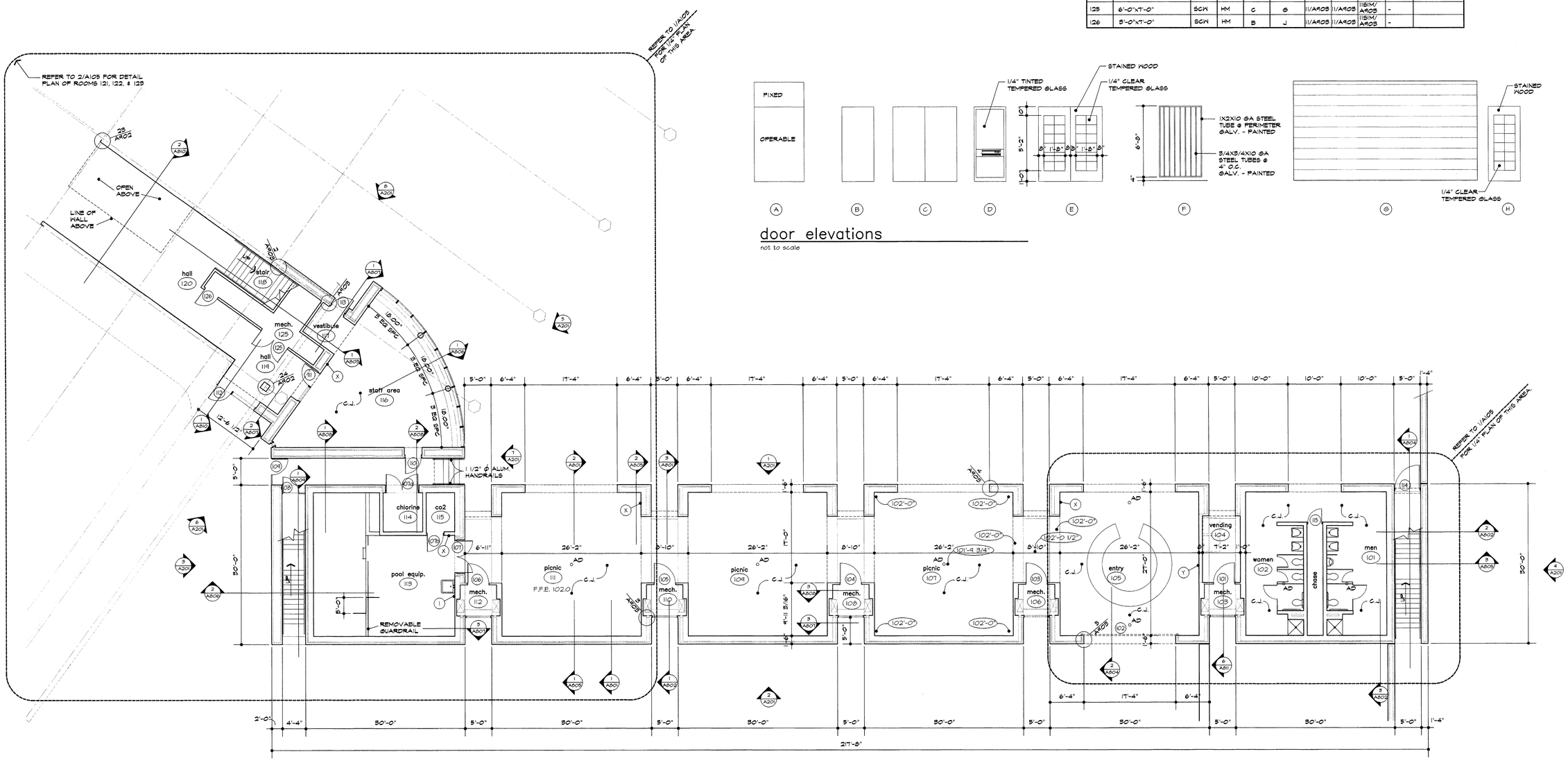

1 lower level floor plan
1/8"=1'-0"

ISSUE DATE
FEB. 20, 2002

REVISIONS

ADDISON ATHLETIC CLUB EXPANSION
AND
LEISURE POOL
ADDISON, TEXAS

RON HOBBS ARCHITECTS
614 W. MAIN ST. SUITE #200 GARLAND, TEXAS 75040
(972) 494-0174 FAX (972) 494-0722

JOB NUMBER
0012

SHEET NAME
1/8" SCALE
FIRST FLOOR
FLOOR PLAN

SHEET NUMBER
A101

ROOM FINISH SCHEDULE – SECOND FLOOR

ROOM NO.	ROOM NAME	FLOOR	BASE	CEILING	CLG. HGT.	WALLS NORTH	NE	EAST	SE	SOUTH	SW	WEST	NW	REMARKS
201	EXERCISE	WRF 1/ WRF 2	WD	ES	15'-0"	TG	-	PGB	-	PGB/TG	-	PGB	-	-
202	ALCOVE	WRF 1	WD	PGB	11'-8"	PGB/TG	-	-	-	PGB/TG	-	-	-	-
203	EXERCISE	WRF 1/ WRF 2	WD	ES	15'-0"	TG	-	PGB	-	PGB/TG	-	PGB	-	-
204	ALCOVE	WRF 1	WD	PGB	11'-8"	PGB/TG	-	-	-	PGB/TG	-	-	-	-
205	EXERCISE	WRF 1/ WRF 2	WD	ES	15'-0"	TG	-	PGB	-	PGB/TG	-	PGB	-	-
206	ALCOVE	WRF 1	WD	PGB	11'-8"	PGB/TG	-	-	-	PGB/TG	-	-	-	-
207	EXERCISE	WRF 1/ WRF 2	WD	ES	15'-0"	TG	-	PGB	-	PGB/TG	-	PGB	-	-
208	ALCOVE	WRF 1	WD	PGB	11'-8"	PGB/TG	-	-	-	PGB/TG	-	-	-	-
209	EXERCISE	WRF 1/ WRF 2	WD	ES	15'-0"	TG	-	PGB	-	PGB/TG	-	PGB	-	-
210	ALCOVE	WRF 1	WD	PGB	11'-8"	PGB/TG	-	-	-	PGB/TG	-	-	-	-
211	CONTROL	C	WD	ES	15'-0"	PGB	-	PGB	-	PGB/TG	-	PGB/TG	-	-
212	ALCOVE	C	WD	PGB	11'-8"	PGB	-	PGB/TG	-	PGB	-	PGB/TG		-
213	LOUNGE	C	WD	ES	15'-4"	-	TG	-	-	PGB	-	-	PGB	-
214	HALL	C	WD	PGB	???	-	PGB	-	PGB	-	PGB	-	PGB	-
215	WOMEN	CT	CT	PGB	9'-0"	PGB/CT	PGB/CT	PGB/CT	PGB/CT	PGB/CT	PGB/CT	PGB/CT	PGB/CT	4
216	MEN	CT	CT	PGB	9'-0"	PGB/CT	PGB/CT	PGB/CT	PGB/CT	PGB/CT	PGB/CT	PGB/CT	PGB/CT	4

DOOR SCHEDULE

NO.	SIZE	TYPE	FRAME	ELEV.	HDW. SET	DETAILS JAMB	JAMB	HEAD	THRES.	REMARKS
201	3'-0"x7'-0"	HM	HM	B	B	15/A902	15/A902	55/M/ A902	15/A901	8
202	3'-0"x7'-0"	AS	ALUM	D	A	22/ A902	15/A902	55/M/ A902	15/A901	2
203	3'-0"x7'-0"	SCW	HM	B	H	11/A902	25/ A902	115/M/ A902	-	-
204	3'-0"x7'-0"	SCW	HM	B	H	11/A902	26/ A902	115/M/ A902	-	-

schedule legend

AC-1 = ACOUSTICAL CEILING TILE TYPE "1"
AG = ALUMINUM & GLASS
ALUM = ALUMINUM
C = CARPET
CG = CLEAR GLASS
CMU = CONCRETE MASONRY UNIT
CMU-S = CONCRETE MASONRY UNIT - SEALED
CONC = CONCRETE
CP = CONCRETE - PAINTED
CT = CERAMIC TILE
ES = EXPOSED STRUCTURE - PAINTED
EX-B = EXISTING BRICK
HM = HOLLOW METAL
PGB = PAINTED GYPSUM BOARD
R = RUBBER
SC = SEALED CONCRETE
SCW = SOLID CORE WOOD
TG = TINTED GLASS
WD = WOOD
WRF = WEIGHT ROOM FLOORING

schedule notes

1. 1/4" CLEAR TEMPERED GLASS
2. 1/4" TINTED TEMPERED GLASS
3. ALL DIMENSIONS ARE TO FACE OF FINISH MATERIAL UNLESS NOTED OTHERWISE.
4. PROVIDE LATCH FOR PADLOCK.
5. OPERABLE PORTION 7'-0" TALL.
6. REPAINT WALLS IN EXISTING ROOM.
7. 4" HEAD
8. PROVIDE WEATHERSTRIPPING.
9. INSTALL CERAMIC TILE TO 7'-2" WITH PAINTED GYP. BOARD ABOVE.
10. INOPERABLE DOOR

wall legend

CONCRETE
CMU
FACE BRICK
GYP. BD. ON METAL STUDS
EXISTING WALL

bath & access. legend

(A) TOILET PAPER DISPENSER
(B) GRAB BAR
(C) FRAMED MIRROR (STAINLESS STEEL)
(D) FEMININE NAPKIN DISPOSAL
(E) FRAMED MIRROR (GLASS)
(F) TOWEL DISPENSER & WASTE RECEPTACLE
(G) SOAP DISPENSER - WALL MOUNTED
(H) UNFRAMED MIRROR
(I) MOP & BROOM HOLDER
(J) CHANGING TABLE
(K) SHOWER ACCESSORIES
(L) ELECTRIC HAND DRYER
(X) FIRE EXTINGUISHER
(Y) DEDICATION PLAQUE

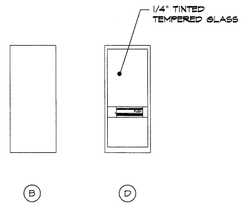

door elevations

not to scale

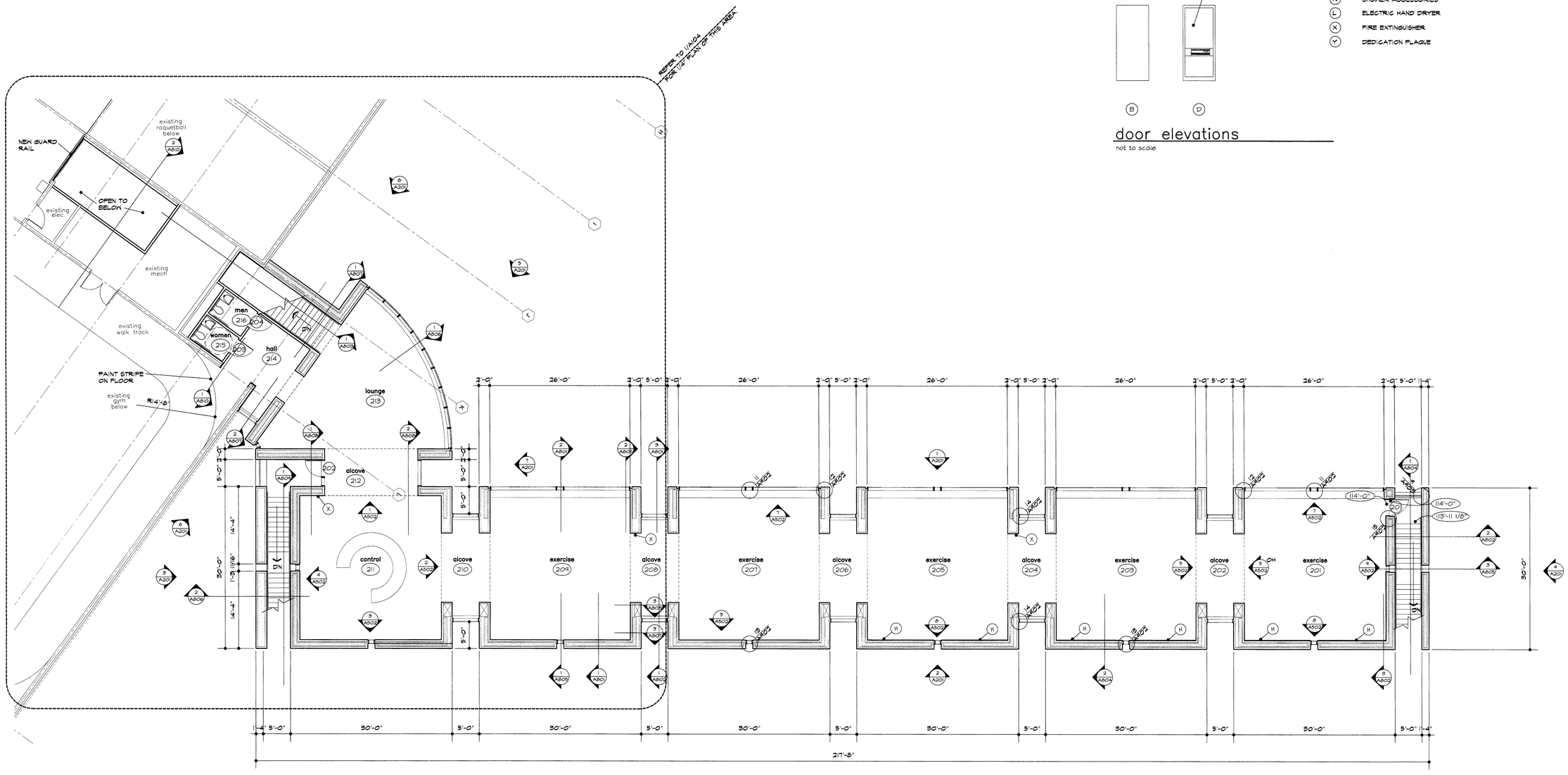

1 upper level floor plan
1/8"=1'-0"

ISSUE DATE
FEB. 20, 2002

REVISIONS

ADDISON ATHLETIC CLUB EXPANSION
AND
LEISURE POOL
ADDISON, TEXAS

RON HOBBS ARCHITECTS
614 W. MAIN ST. SUITE #200 GARLAND, TEXAS 75040
(972) 494-0174 FAX (972) 494-0722

JOB NUMBER
0012

SHEET NAME
1/8" SCALE
SECOND FLOOR
FLOOR PLAN
SHEET NUMBER
A102

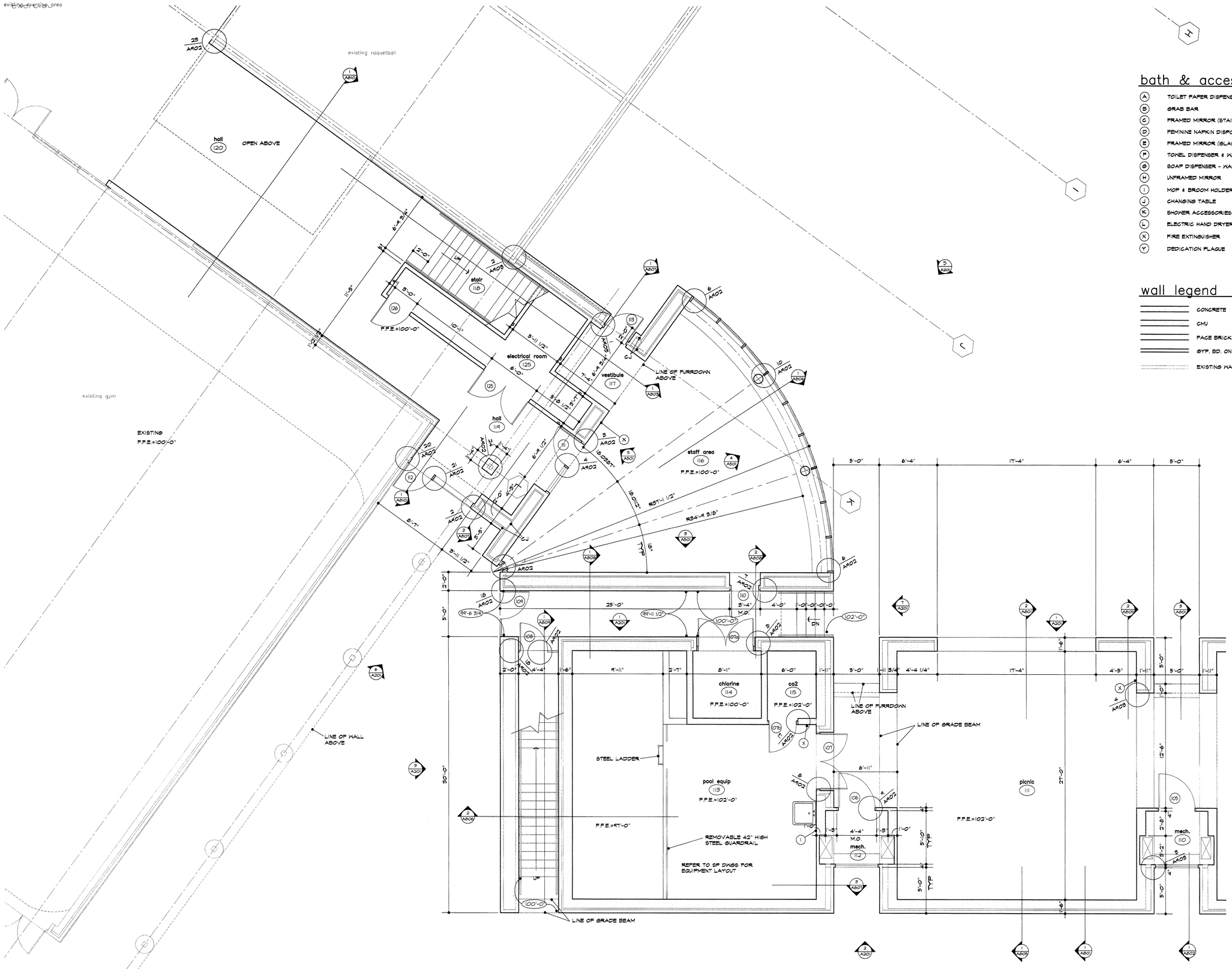

1 detail floor plan
1/4"=1'-0"

bath & access. legend

- (A) TOILET PAPER DISPENSER
- (B) GRAB BAR
- (C) FRAMED MIRROR (STAINLESS STEEL)
- (D) FEMININE NAPKIN DISPOSAL
- (E) FRAMED MIRROR (GLASS)
- (F) TOWEL DISPENSER & WASTE RECEPTACLE
- (G) SOAP DISPENSER - WALL MOUNTED
- (H) UNFRAMED MIRROR
- (I) MOP & BROOM HOLDER
- (J) CHANGING TABLE
- (K) SHOWER ACCESSORIES
- (L) ELECTRIC HAND DRYER
- (X) FIRE EXTINGUISHER
- (Y) DEDICATION PLAQUE

wall legend

- CONCRETE
- CMU
- FACE BRICK
- GYP. BD. ON METAL STUDS
- EXISTING WALL

ISSUE DATE
FEB. 20, 2002

REVISIONS

ADDISON ATHLETIC CLUB EXPANSION AND LEISURE POOL
ADDISON, TEXAS

RON HOBBS ARCHITECTS
614 W. MAIN ST., SUITE #200 GARLAND, TEXAS 75040
(972) 494-0174 FAX (972) 494-0722

JOB NUMBER
0012

SHEET NAME
1/4" SCALE
FIRST FLOOR
DETAIL PLAN

SHEET NUMBER
A103

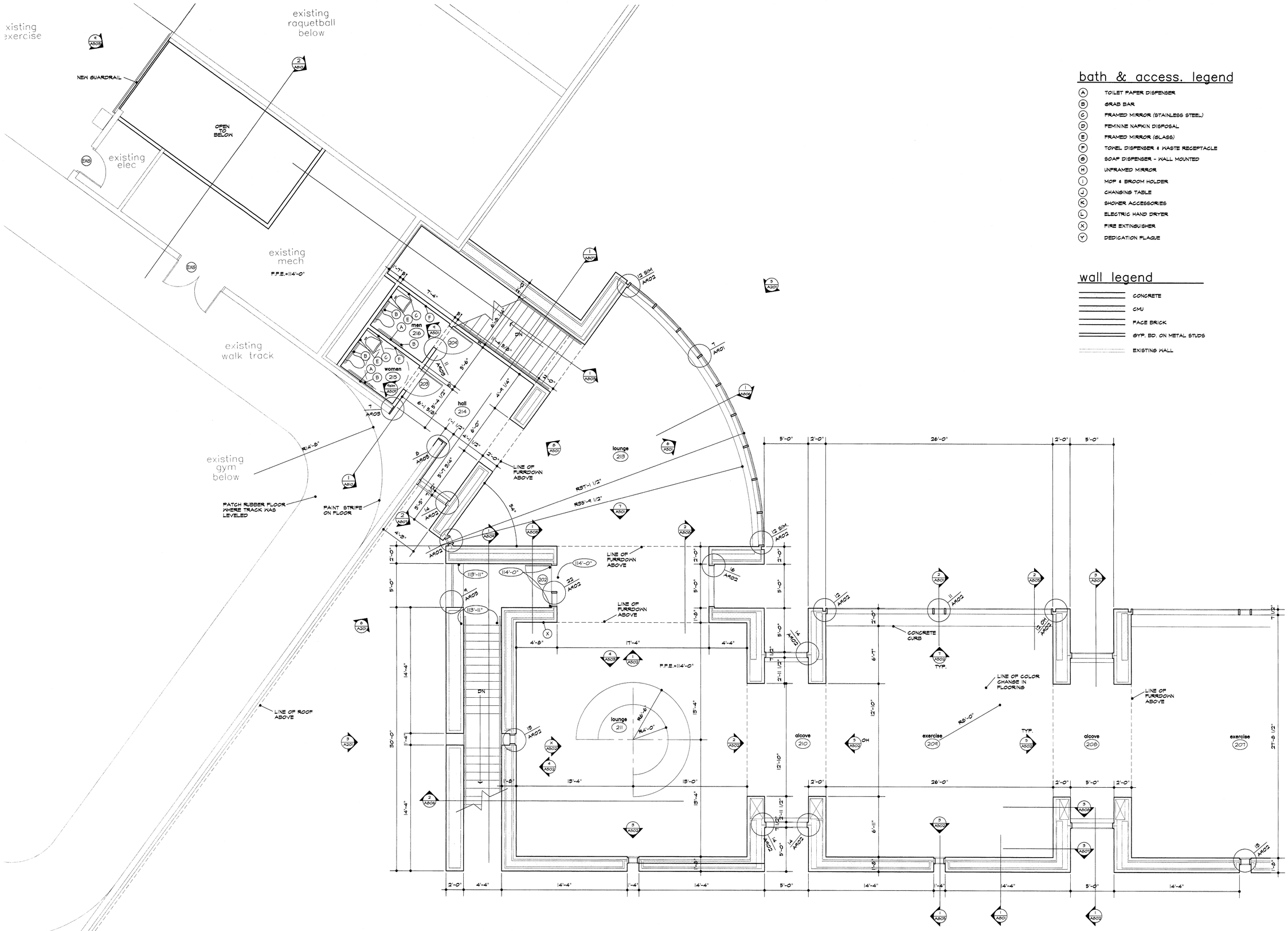

1 detail floor plan
1/4"=1'-0"

bath & access. legend

- (A) TOILET PAPER DISPENSER
- (B) GRAB BAR
- (C) FRAMED MIRROR (STAINLESS STEEL)
- (D) FEMININE NAPKIN DISPOSAL
- (E) FRAMED MIRROR (GLASS)
- (F) TOWEL DISPENSER & WASTE RECEPTACLE
- (G) SOAP DISPENSER - WALL MOUNTED
- (H) UNFRAMED MIRROR
- (I) MOP & BROOM HOLDER
- (J) CHANGING TABLE
- (K) SHOWER ACCESSORIES
- (L) ELECTRIC HAND DRYER
- (X) FIRE EXTINGUISHER
- (Y) DEDICATION PLAQUE

wall legend

- CONCRETE
- CMU
- FACE BRICK
- GYP. BD. ON METAL STUDS
- EXISTING WALL

ISSUE DATE
FEB. 20, 2002

REVISIONS

ADDISON ATHLETIC CLUB EXPANSION AND LEISURE POOL
ADDISON, TEXAS

RON HOBBS ARCHITECTS
614 W. MAIN ST., SUITE #200 GARLAND, TEXAS 75040
(972) 494-0714 FAX (972) 494-0722

JOB NUMBER
0012

SHEET NAME
1/4" SCALE
SECOND FLOOR
DETAIL PLAN

SHEET NUMBER
A104

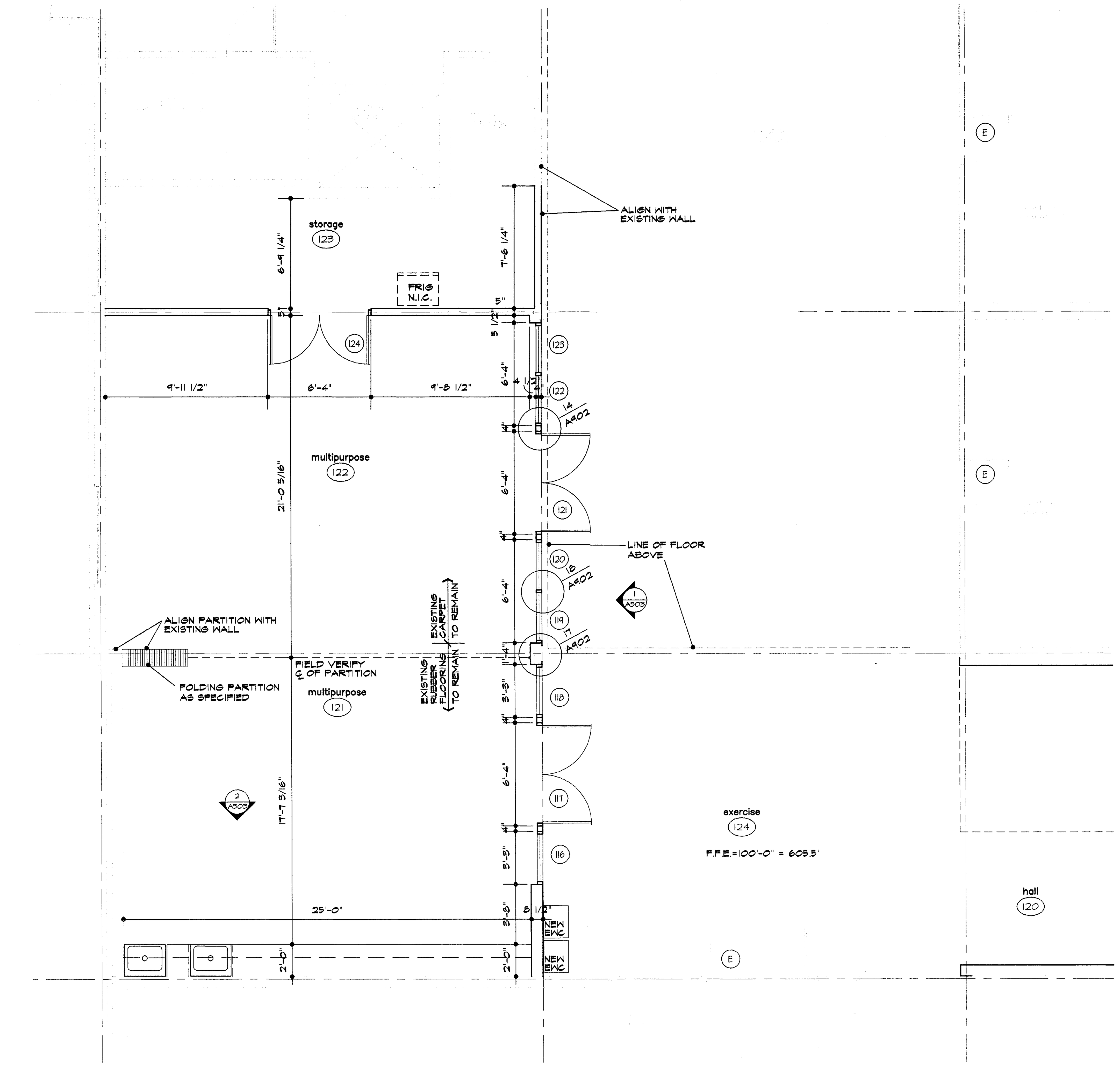

2 detail floor plan
1/4"=1'-0"

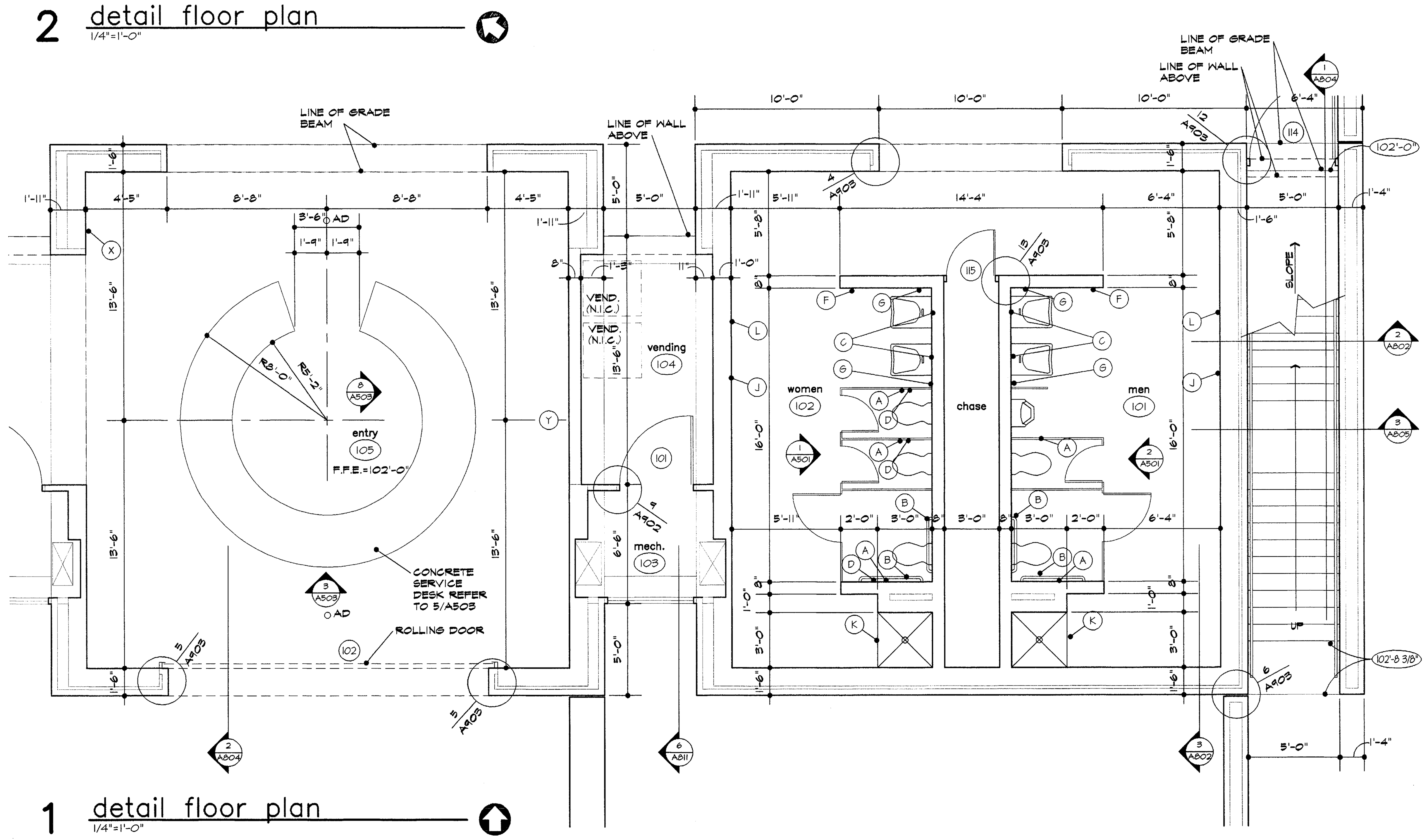

1 detail floor plan
1/4"=1'-0"

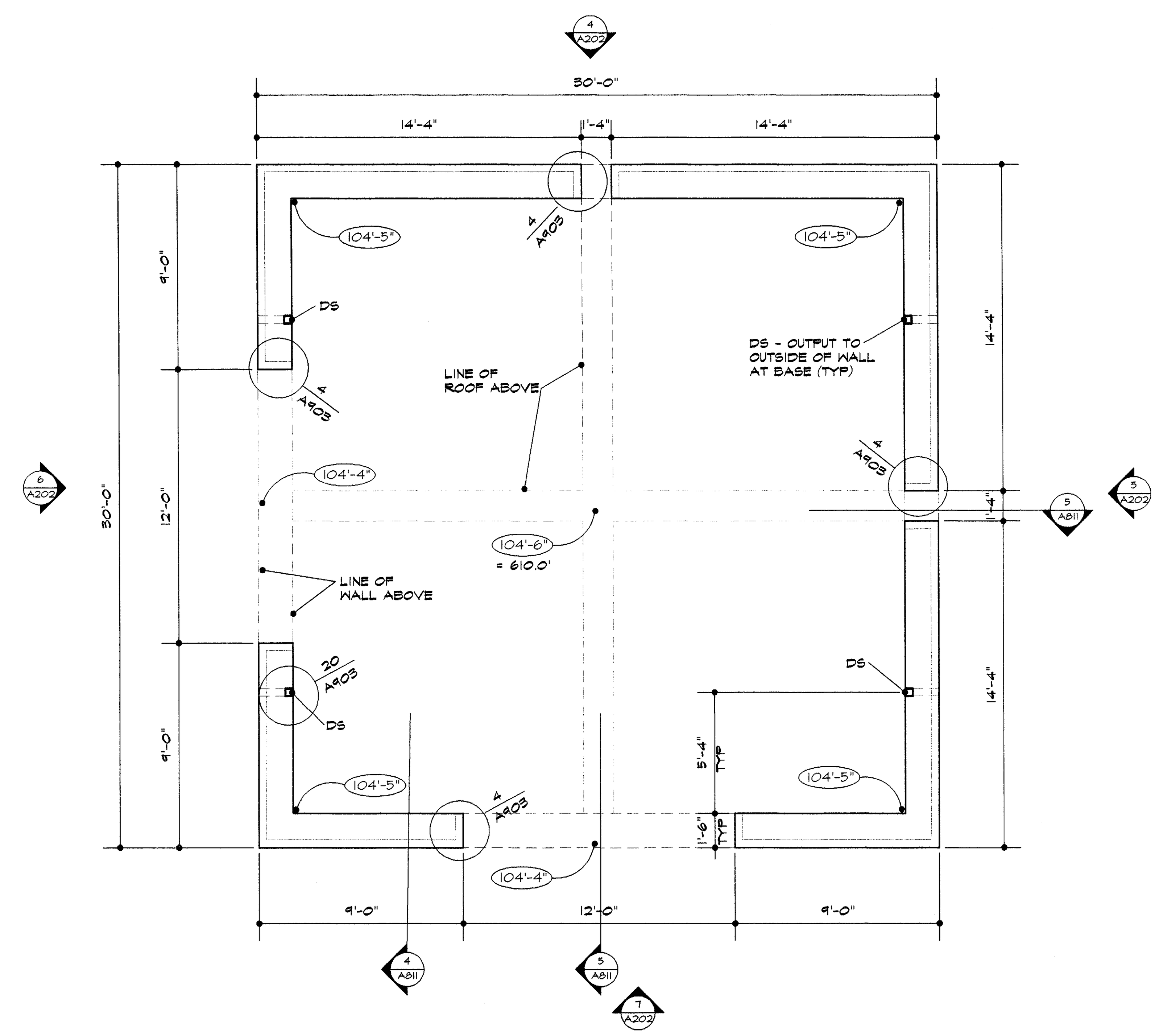

3 detail floor plan– alt #4
1/4"=1'-0"

bath & access. legend

- (A) TOILET PAPER DISPENSER
- (B) GRAB BAR
- (C) FRAMED MIRROR (STAINLESS STEEL)
- (D) FEMININE NAPKIN DISPOSAL
- (E) FRAMED MIRROR (GLASS)
- (F) TOWEL DISPENSER & WASTE RECEPTACLE
- (G) SOAP DISPENSER - WALL MOUNTED
- (H) UNFRAMED MIRROR
- (I) MOP & BROOM HOLDER
- (J) CHANGING TABLE
- (K) SHOWER ACCESSORIES
- (L) ELECTRIC HAND DRYER
- (X) FIRE EXTINGUISHER
- (Y) DEDICATION PLAQUE

wall legend

- CONCRETE
- CMU
- FACE BRICK
- GYP. BD. ON METAL STUDS
- EXISTING WALL

ISSUE DATE
FEB. 20, 2002
REVISIONS

ADDISON ATHLETIC CLUB EXPANSION AND LEISURE POOL
ADDISON, TEXAS

RON HOBBS ARCHITECTS
614 W. MAIN ST. SUITE #200 GARLAND, TEXAS 75040
(972) 494-0174 FAX (972) 494-0722

REGISTERED ARCHITECT STATE OF TEXAS

JOB NUMBER
0012

SHEET NAME
1/4" SCALE FIRST FLOOR DETAIL PLAN
SHEET NUMBER
A105

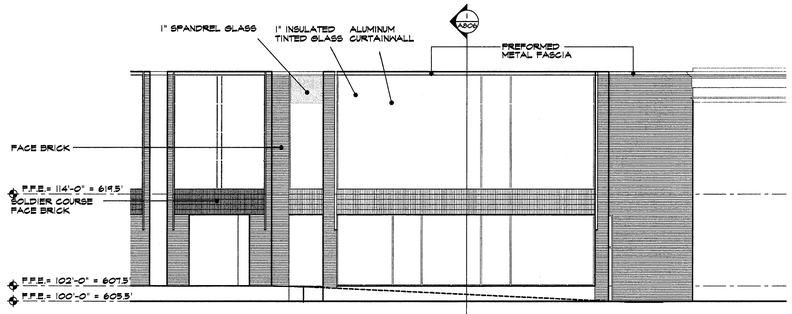

5 northeast elevation
1/8"=1'-0"

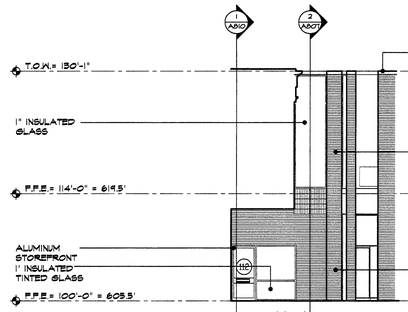

6 partial elevation
1/8"=1'-0"

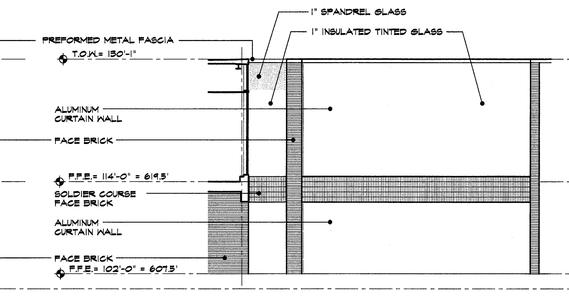

7 partial elevation
1/8"=1'-0"

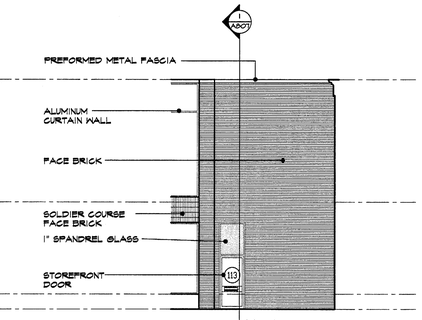

8 partial elevation
1/8"=1'-0"

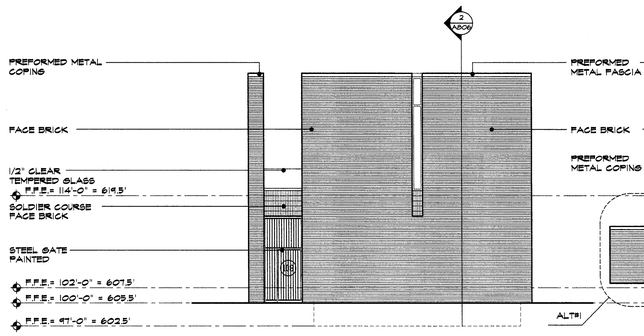

3 west elevation
1/8"=1'-0"

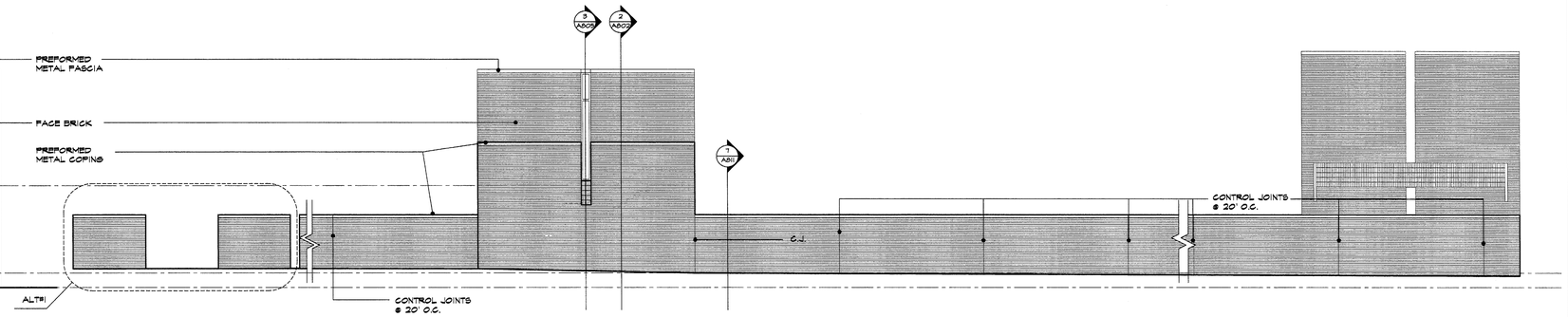

4 east elevation
1/8"=1'-0"

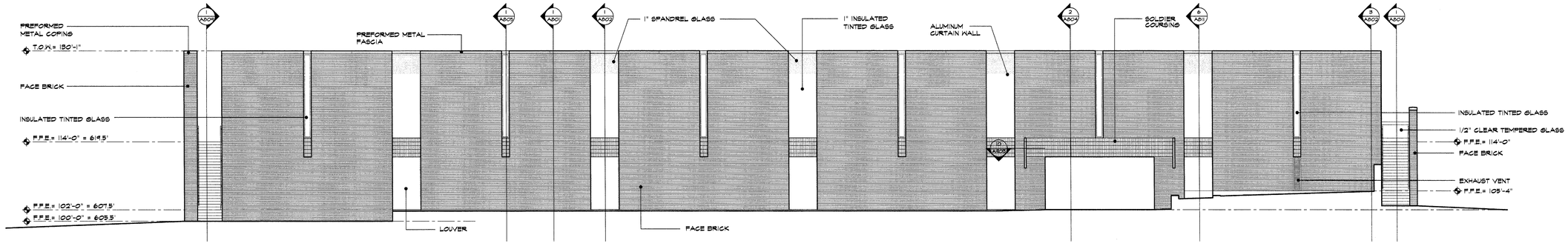

2 south elevation
1/8"=1'-0"

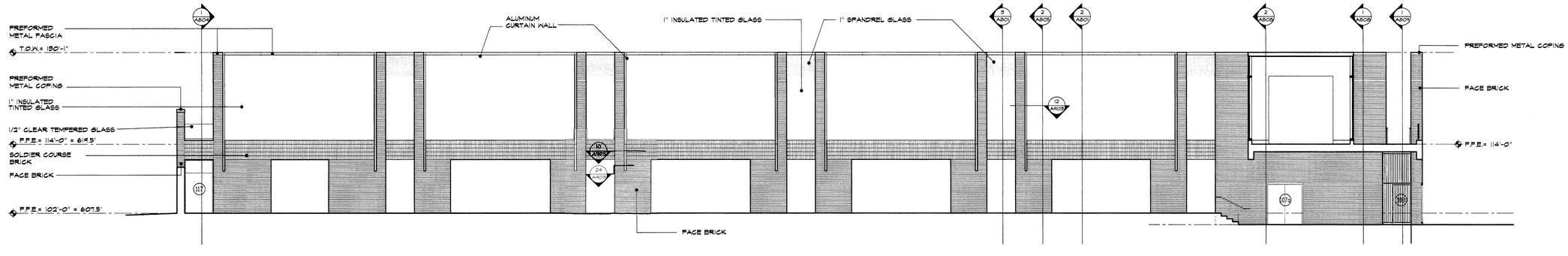

1 north elevation
1/8"=1'-0"

ISSUE DATE
FEB. 20, 2002

REVISIONS

ADDISON ATHLETIC CLUB EXPANSION AND LEISURE POOL
ADDISON, TEXAS

RON HOBBS ARCHITECTS
614 W. MAIN ST. SUITE #200 GARLAND, TEXAS 75040
(972) 494-0174 FAX (972) 494-0722

REGISTERED ARCHITECT RONALD L. HOBBS STATE OF TEXAS

JOB NUMBER
0012

SHEET NAME
1/8" SCALE EXTERIOR ELEVATIONS

SHEET NUMBER
A201

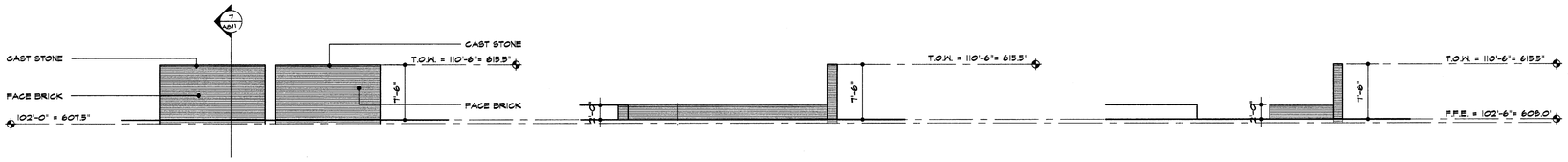

8 south elev @ south plaza
1/8"=1'-0"

9 elev @ south plaza
1/8"=1'-0"

10 west elev @ south plaza
1/8"=1'-0"

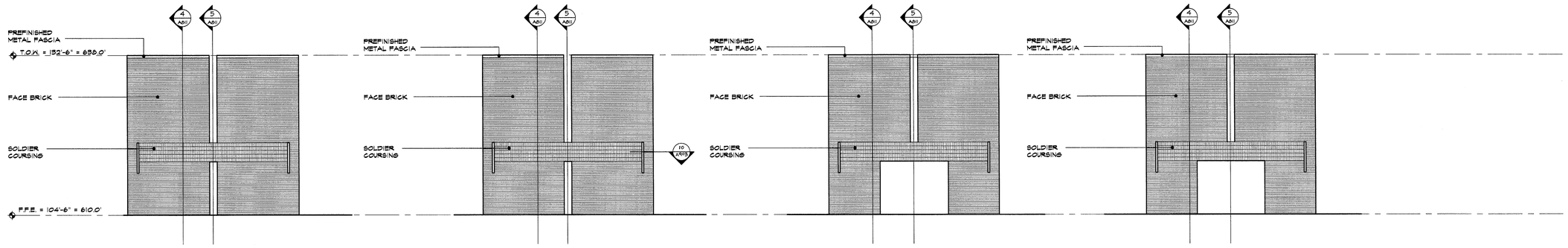

4 north elev @ north pavilion
1/8"=1'-0"

5 east elev @ north pavilion
1/8"=1'-0"

6 west elev @ north pavilion
1/8"=1'-0"

7 south elev @ north pavilion
1/8"=1'-0"

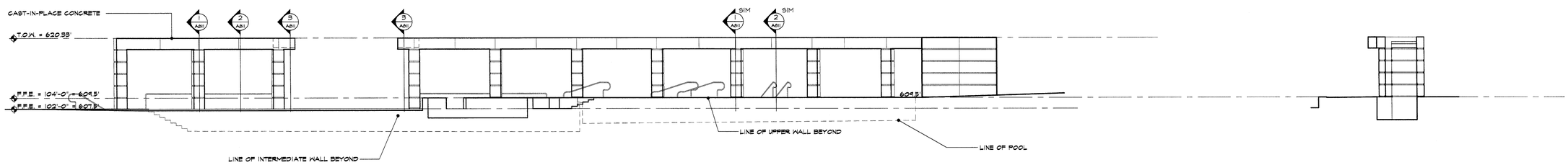

2 aqueduct elevation
1/8"=1'-0"

3 waterfall elevation
1/8"=1'-0"

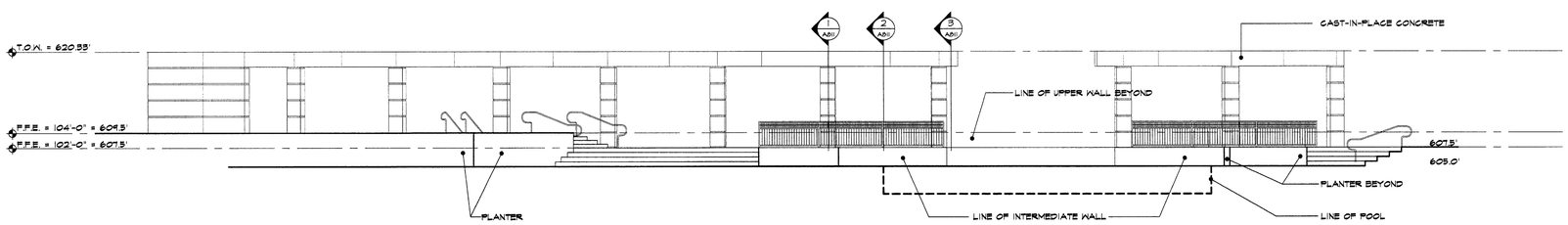

1 aqueduct elevation
1/8"=1'-0"

ISSUE DATE
FEB. 20, 2002

REVISIONS

ADDISON ATHLETIC CLUB EXPANSION
AND
LEISURE POOL
ADDISON, TEXAS

RON HOBBS ARCHITECTS
614 W. MAIN ST., SUITE #200 GARLAND, TEXAS 75040
(972) 494-0174 FAX (972) 494-0722

JOB NUMBER
0012

SHEET NAME
1/8" SCALE
EXTERIOR ELEVATIONS

SHEET NUMBER
A202

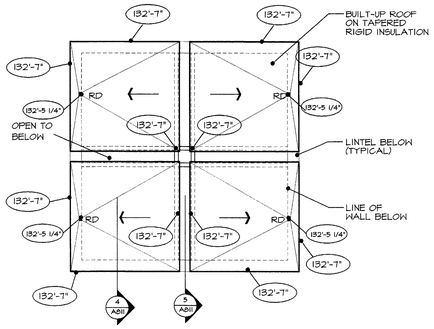

2 roof plan– north pavilion – altenate #4
1/8"=1'-0"

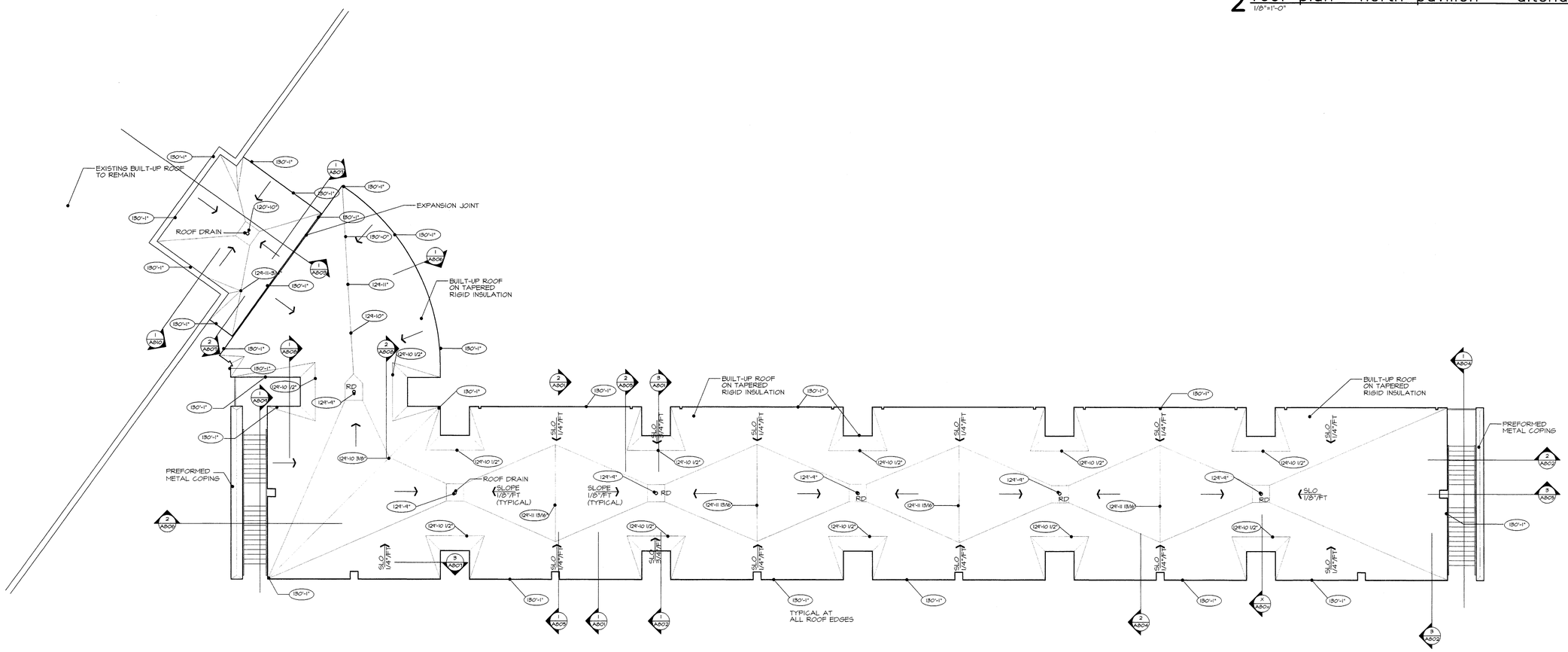

1 roof plan
1/8"=1'-0"

ISSUE DATE
FEB. 20, 2002

REVISIONS

ADDISON ATHLETIC CLUB EXPANSION
AND
LEISURE POOL
ADDISON, TEXAS

RON HOBBS ARCHITECTS
614 W. MAIN ST. SUITE #200 GARLAND, TEXAS 75040
(972) 494-0174 FAX (972) 494-0722

JOB NUMBER
0012

SHEET NAME

SHEET NUMBER
A301

symbol legend

- 2'x4' FLUORESCENT LIGHT
- 2'X2' FLUORESCENT LIGHT
- RECESSED DOWN LIGHT
- PENDANT FIXTURE
- ACOUSTIC CEILING TILE
- GYPSUM BOARD CEILING
- SMOOTH TROWEL CONCRETE
- SUPPLY AIR GRILLE
- RETURN AIR GRILLE
- FLUORESCENT STRIP
- EXIT SIGN
- WALL MOUNTED LIGHT
- PENDANT FLUORESCENT

abbreviations

C.J.	CONTROL JOINT
R.J.	REVEAL JOINT

2 pavillion reflected ceiling plan – alt #4
1/8"=1'-0"

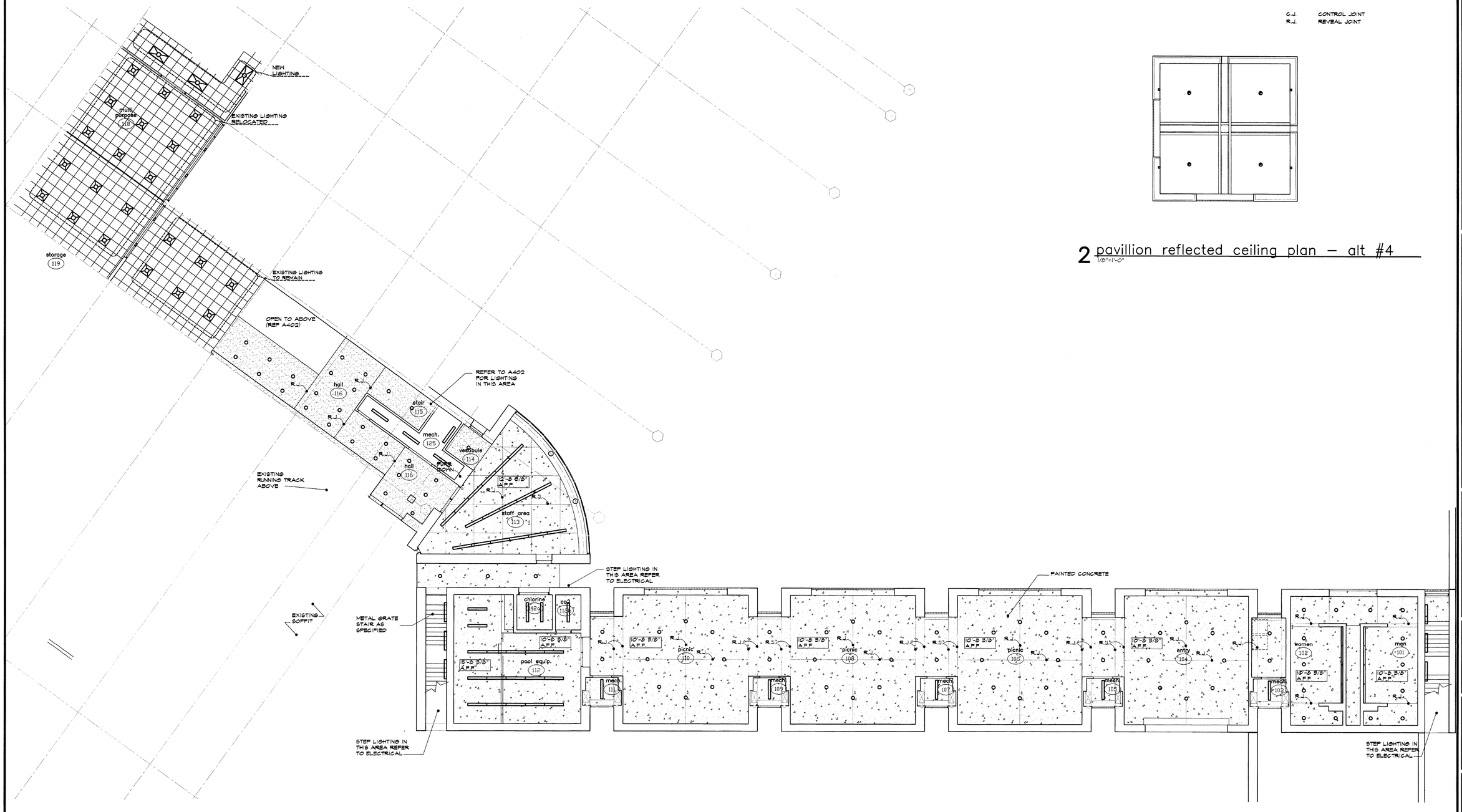

1 lower level reflected ceiling plan
1/8"=1'-0"

ISSUE DATE
FEB. 20, 2002

REVISIONS

ADDISON ATHLETIC CLUB EXPANSION AND LEISURE POOL
ADDISON, TEXAS

RON HOBBS ARCHITECTS
614 W. MAIN ST. SUITE #200 GARLAND, TEXAS 75040
(972) 494-0174 FAX (972) 494-0722

JOB NUMBER
0012

SHEET NAME
FIRST FLOOR REFLECTED CEILING PLAN

SHEET NUMBER
A401

symbol legend

- 2'x4' FLUORESCENT LIGHT
- 2'X2' FLUORESCENT LIGHT
- RECESSED DOWN LIGHT
- ACOUSTIC CEILING TILE
- GYPSUM BOARD CEILING
- SMOOTH TROWEL CONCRETE
- SUPPLY AIR GRILLE
- RETURN AIR GRILLE
- FLUORESCENT STRIP
- EXIT SIGN
- WALL MOUNTED LIGHT
- PENDANT FLUORESCENT

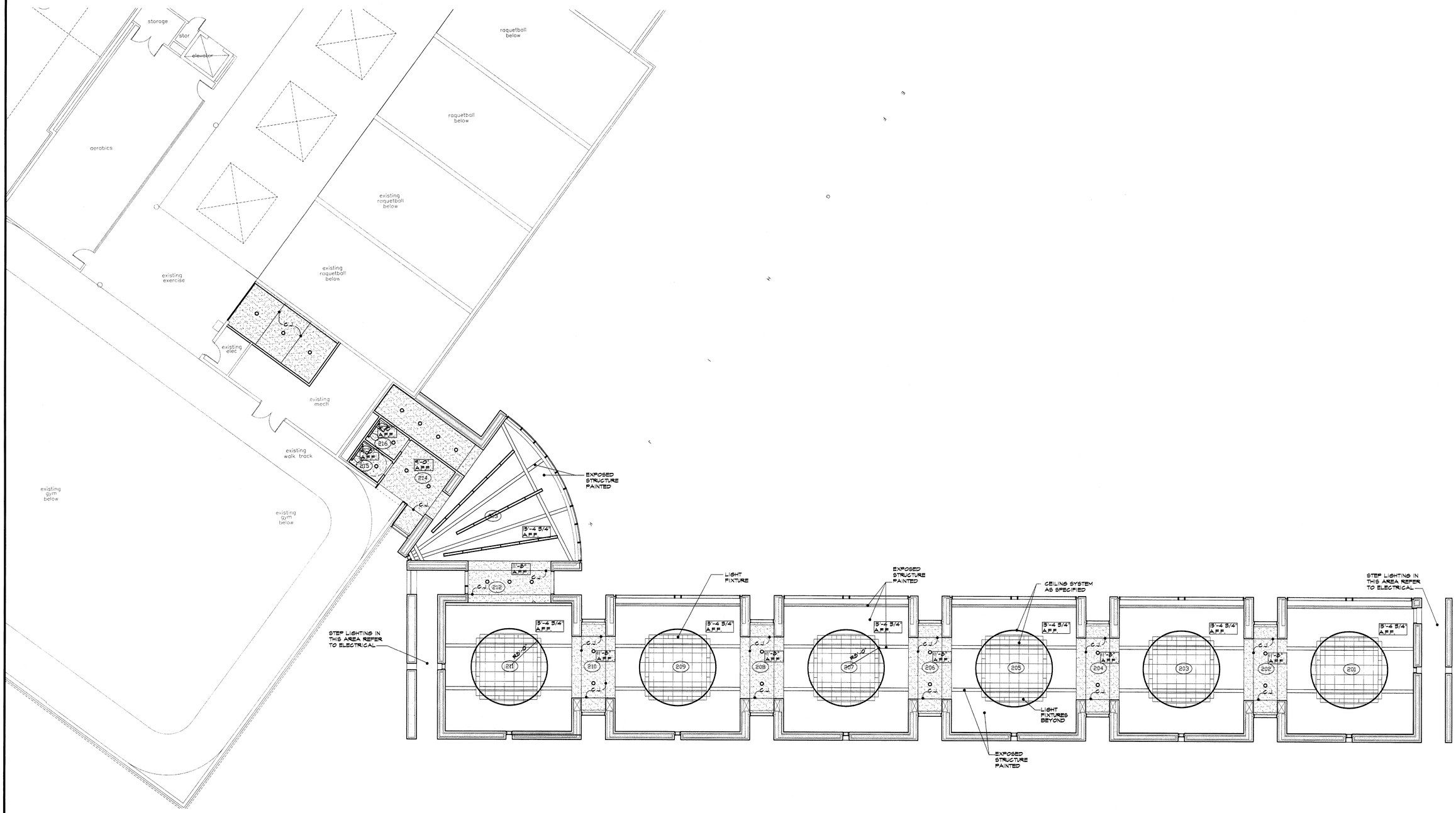

1 upper level refelcted ceiling plan
1/8"=1'-0"

ISSUE DATE
FEB. 20, 2002

REVISIONS

ADDISON ATHLETIC CLUB EXPANSION AND LEISURE POOL
ADDISON, TEXAS

RON HOBBS ARCHITECTS
614 W. MAIN ST. SUITE #200 GARLAND, TEXAS 75040
(972) 494-0174 FAX (972) 494-0722

REGISTERED ARCHITECT RONALD L. HOBBS STATE OF TEXAS

JOB NUMBER
0012

SHEET NAME
SECOND FLOOR REFLECTED CEILING PLAN

SHEET NUMBER
A402

legend
CJ = CONTROL JOINT

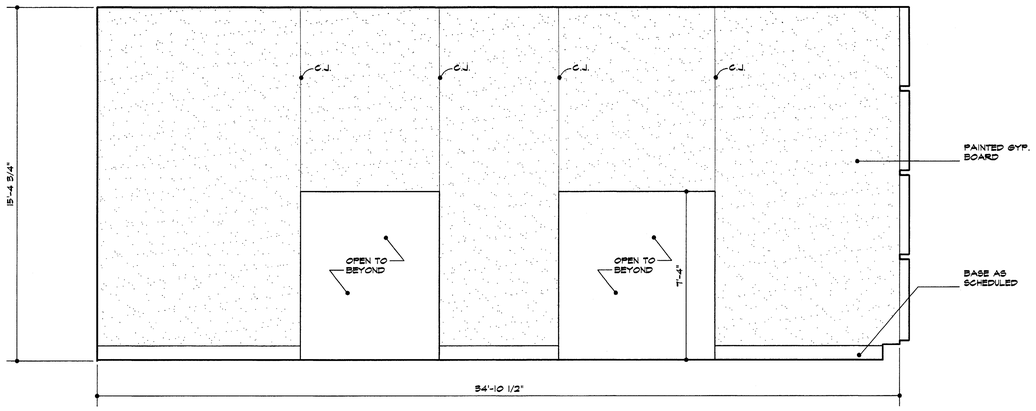

8 interior elevation – rm. #213
3/8"=1'-0"

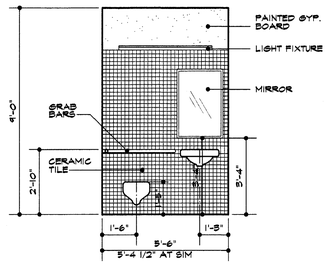

9 interior elev – rm. #215 & 216
3/8"=1'-0"

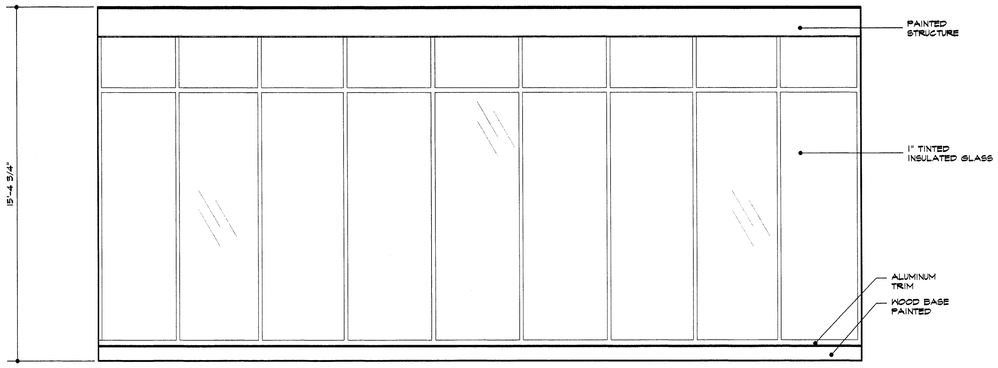

6 interior elevation – rm. #213
3/8"=1'-0"

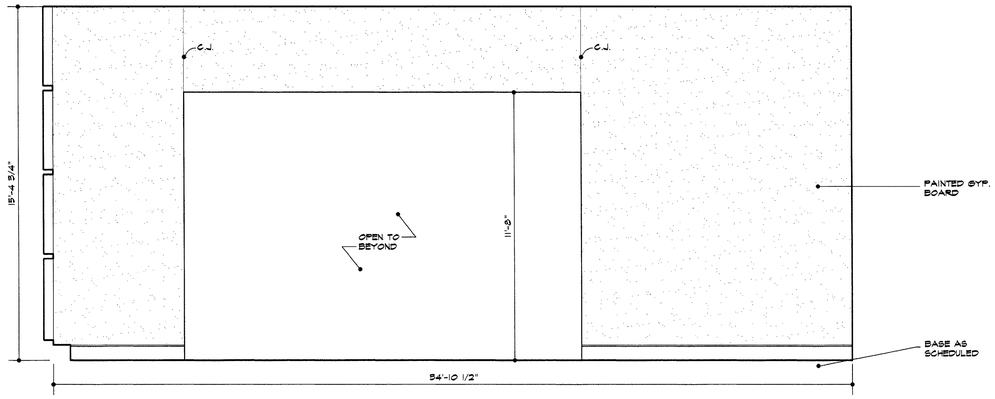

7 interior elevation – rm. #213
3/8"=1'-0"

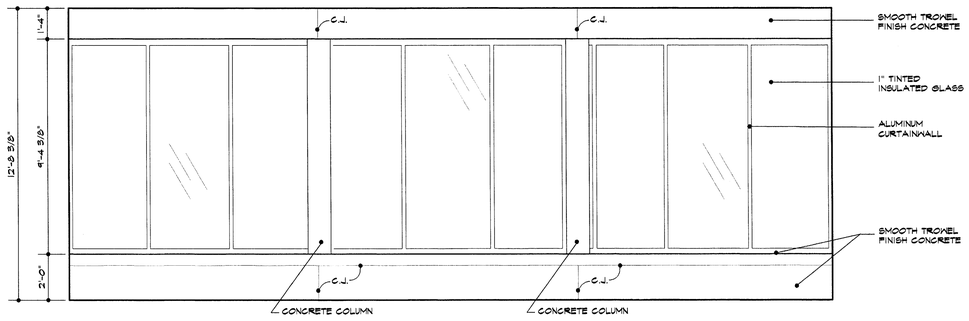

4 interior elevation – rm. #116
3/8"=1'-0"

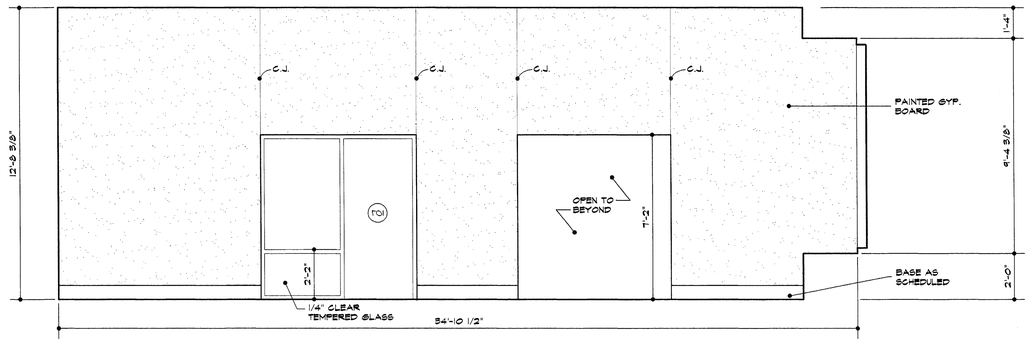

5 interior elevation – rm. #116
3/8"=1'-0"

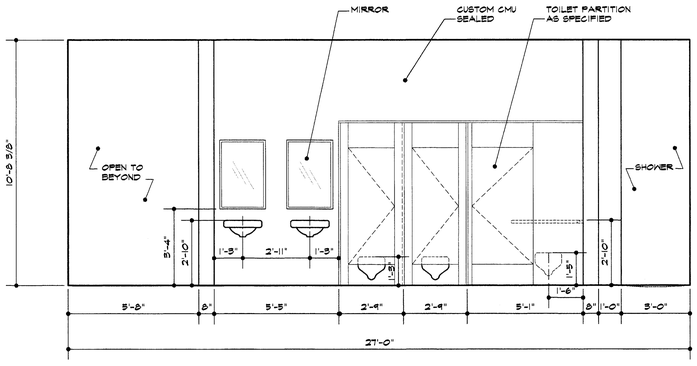

1 interior elevation – rm. #102
3/8"=1'-0"

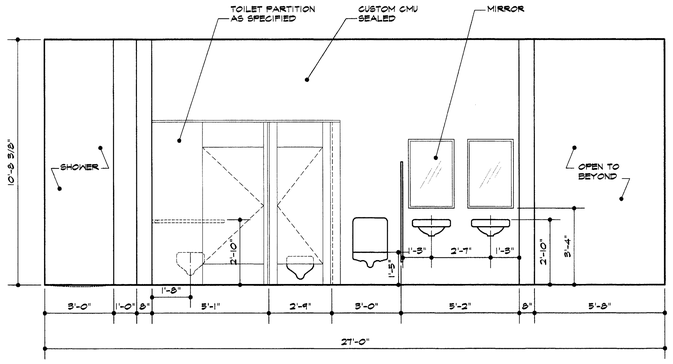

2 interior elevation – rm. #101
3/8"=1'-0"

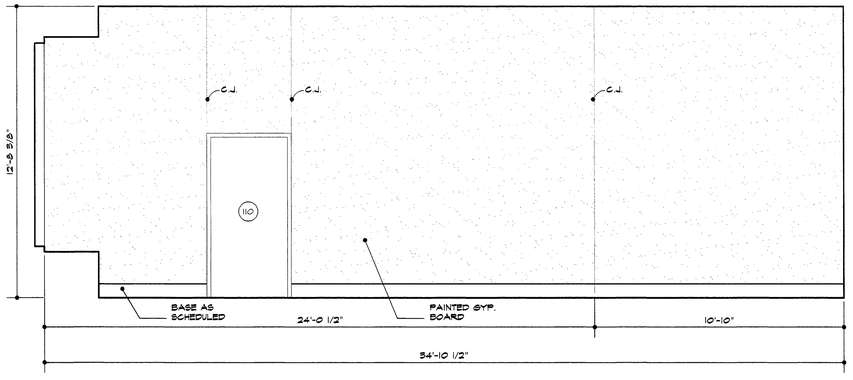

3 interior elevation – rm. #116
3/8"=1'-0"

ISSUE DATE
FEB. 20, 2002
REVISIONS

ADDISON ATHLETIC CLUB EXPANSION
AND
LEISURE POOL
ADDISON, TEXAS

RON HOBBS ARCHITECTS
614 W. MAIN ST. SUITE #200 GARLAND, TEXAS 75040
(972) 494-0174 FAX (972) 494-0722

JOB NUMBER
0012

SHEET NAME
INTERIOR ELEVATIONS
SHEET NUMBER
A501

legend

CJ = CONTROL JOINT

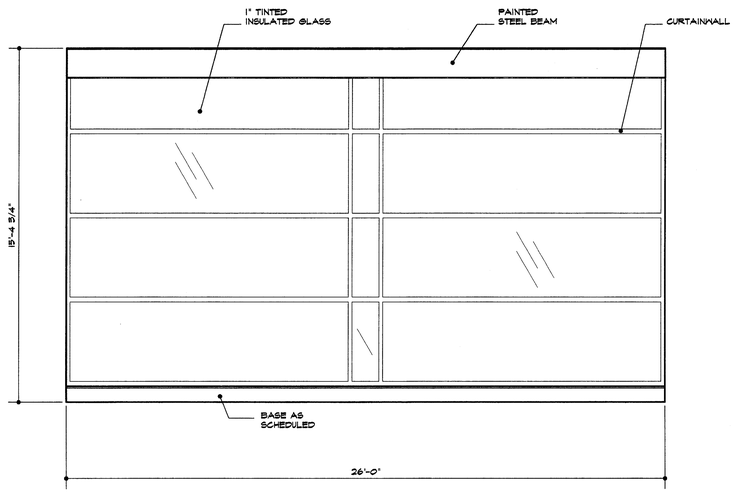

7 interior elevation
3/8"=1'-0"

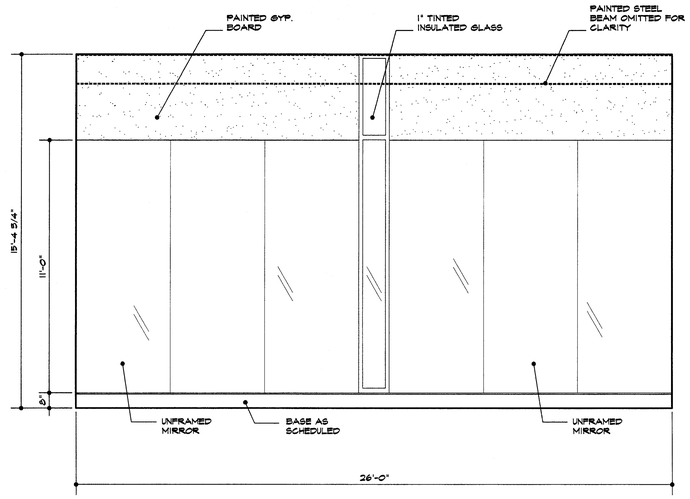

8 interior elevation
3/8"=1'-0"

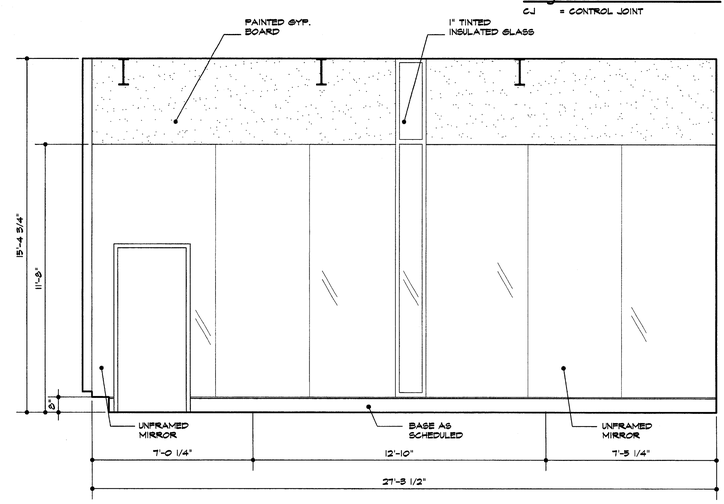

9 interior elevation – rm. #201
3/8"=1'-0"

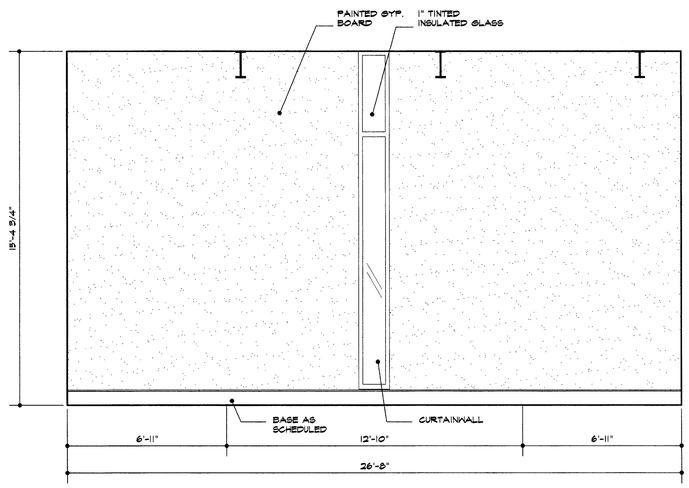

4 interior elevation – rm. #211
3/8"=1'-0"

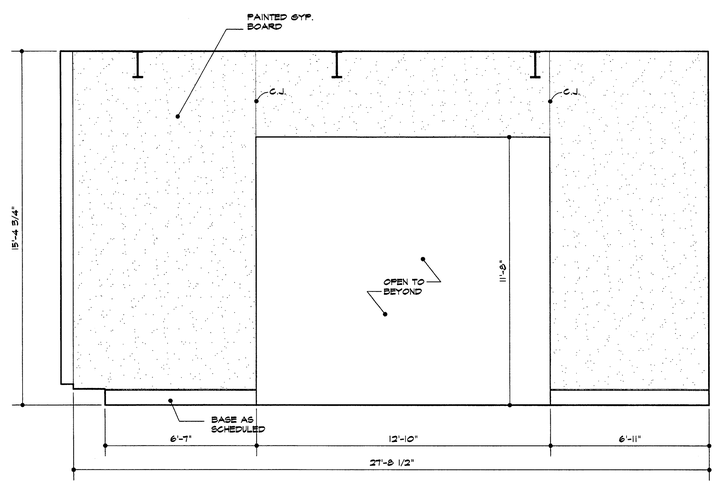

5 interior elevation
3/8"=1'-0"

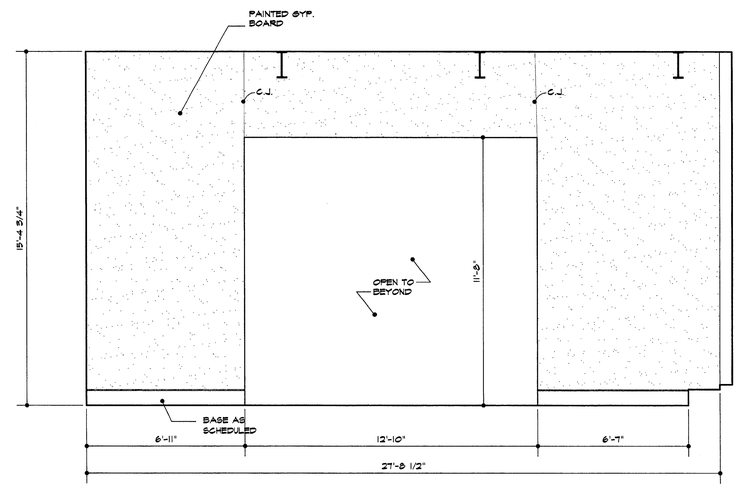

6 interior elevation
3/8"=1'-0"

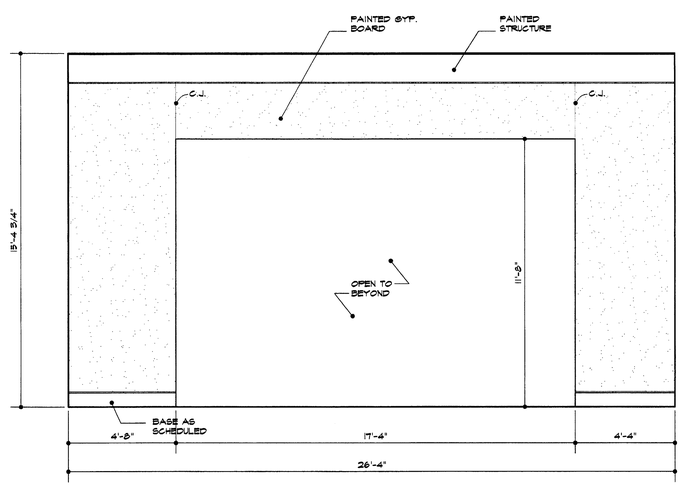

1 interior elevation – rm. #211
3/8"=1'-0"

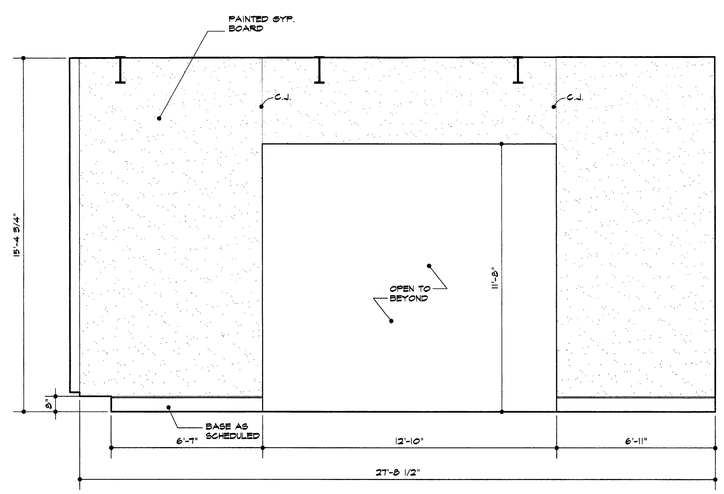

2 interior elevation – rm. #211
3/8"=1'-0"

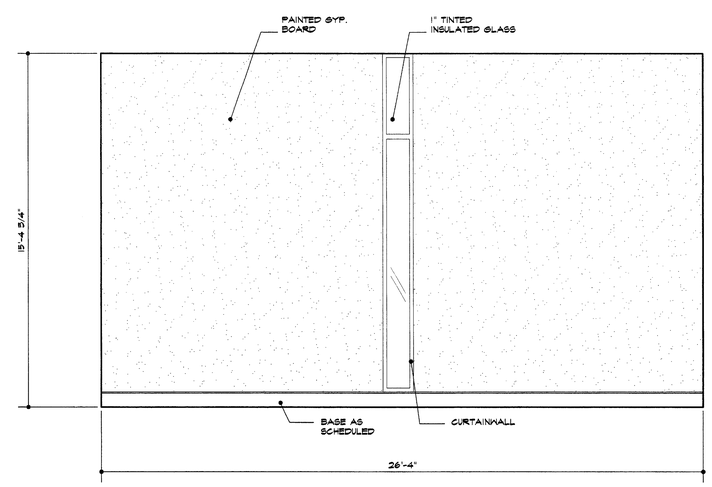

3 interior elevation – rm. #211
3/8"=1'-0"

ISSUE DATE
FEB. 20, 2002

REVISIONS

ADDISON ATHLETIC CLUB EXPANSION
AND
LEISURE POOL
ADDISON, TEXAS

RON HOBBS ARCHITECTS
614 W. MAIN ST. SUITE #200 GARLAND, TEXAS 75040
(972) 494-0174 FAX (972) 494-0722

REGISTERED ARCHITECT RONALD L. HOBBS STATE OF TEXAS

JOB NUMBER
0012

SHEET NAME
3/8" SCALE
INTERIOR ELEVATIONS

SHEET NUMBER
A502

legend

CJ = CONTROL JOINT

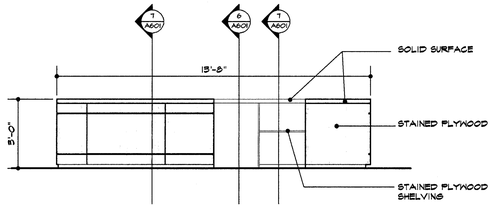

7 desk elevation – rm. #211
3/8"=1'-0"

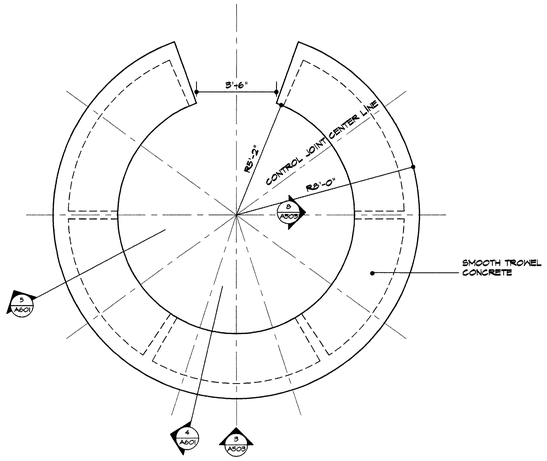

5 desk floor plan – rm. #105
3/8"=1'-0"

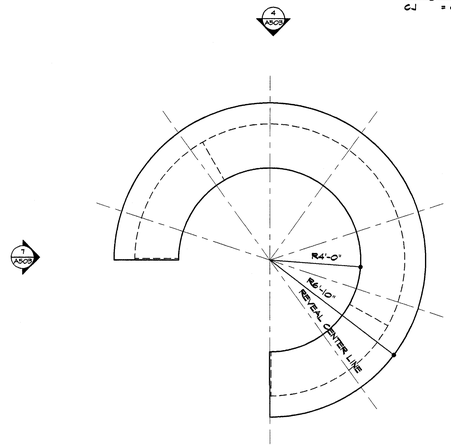

6 desk floor plan – rm. #211
3/8"=1'-0"

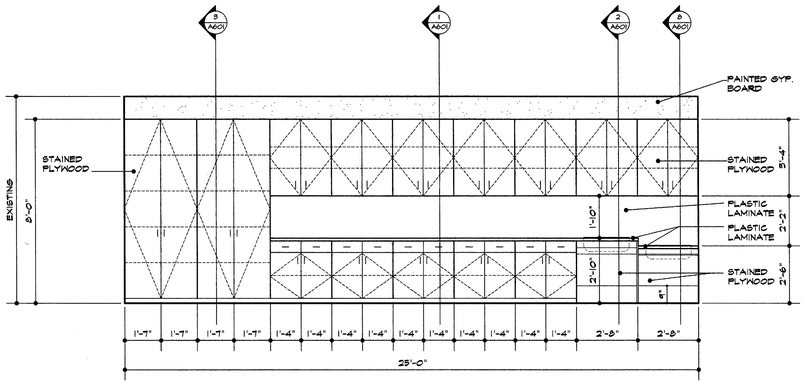

2 interior elevation – rm. #121
3/8"=1'-0"

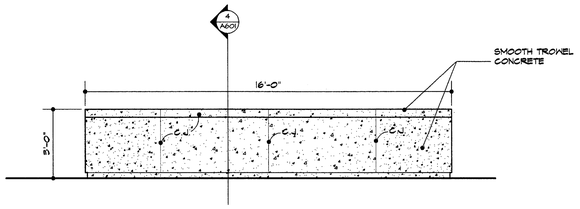

3 desk elevation – rm. #105
3/8"=1'-0"

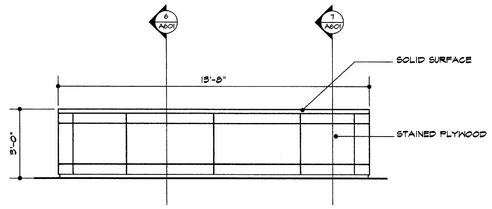

4 desk elevation – rm. #211
3/8"=1'-0"

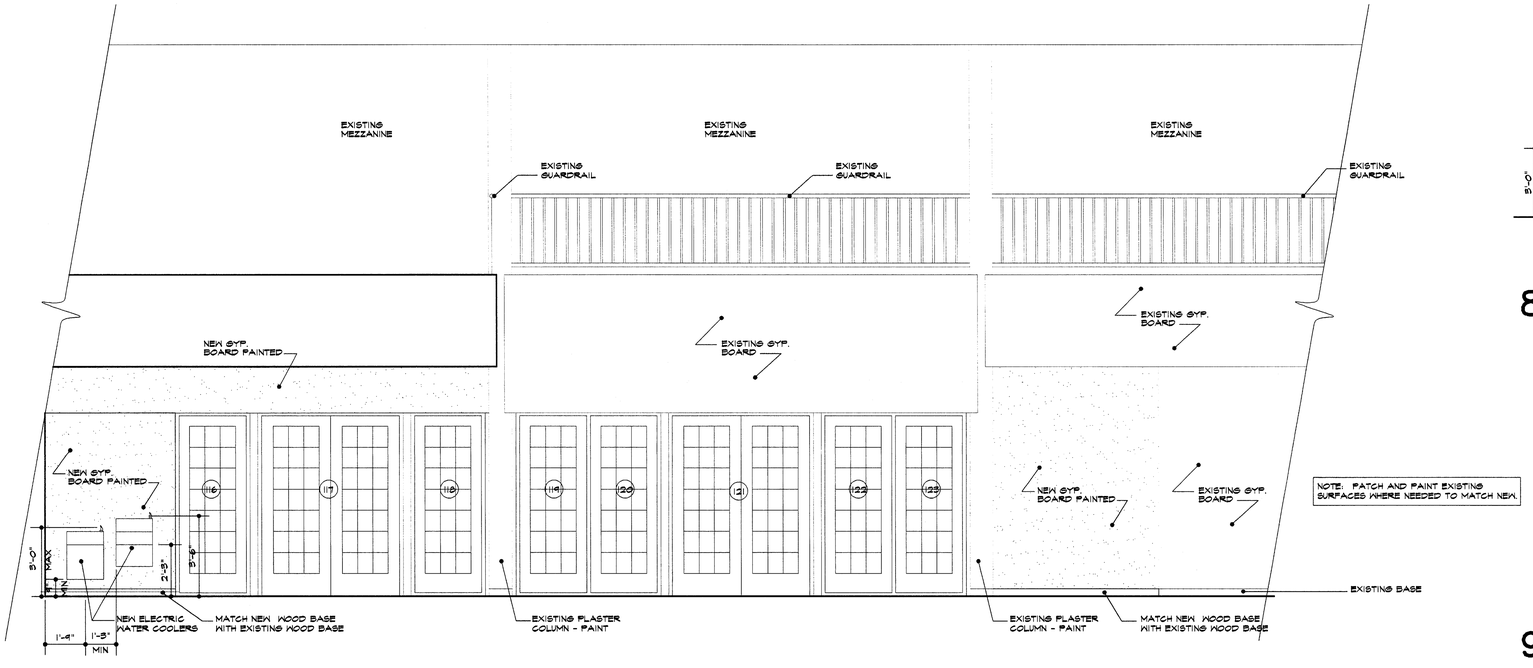

NOTE: PATCH AND PAINT EXISTING SURFACES WHERE NEEDED TO MATCH NEW.

1 interior elevation –existing exercise
3/8"=1'-0"

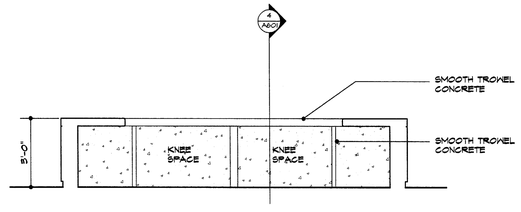

8 desk elevation – rm. #105
3/8"=1'-0"

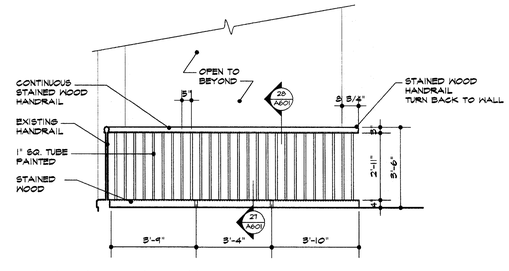

9 interior elevation
3/8"=1'-0"

ISSUE DATE
FEB. 20, 2002

REVISIONS

ADDISON ATHLETIC CLUB EXPANSION
AND
LEISURE POOL
ADDISON, TEXAS

RON HOBBS ARCHITECTS
614 W. MAIN ST. SUITE #200 GARLAND, TEXAS 75040
(972) 494-0174 FAX (972) 494-0722

JOB NUMBER
0012

SHEET NAME
INTERIOR ELEVATIONS
SHEET NUMBER
A503

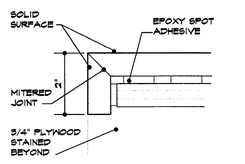

18 detail
half size

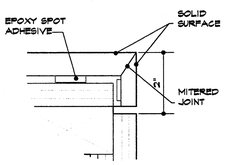

19 detail
half size

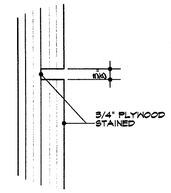

20 detail
half size

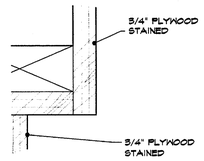

21 detail
half size

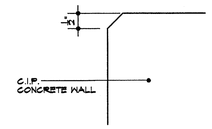

22 detail
half size

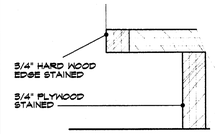

23 detail
half size

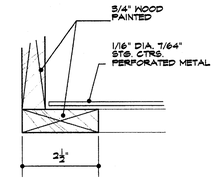

24 detail
half size

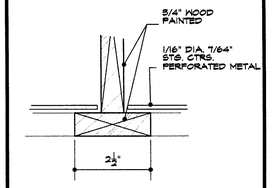

25 detail
half size

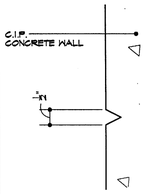

26 detail
half size

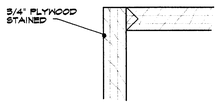

9 detail
half size

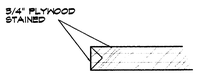

10 detail
half size

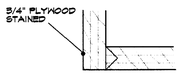

11 detail
half size

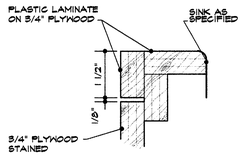

12 detail
half size

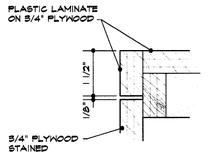

13 detail
half size

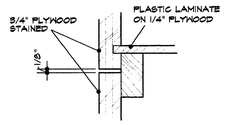

14 detail
half size

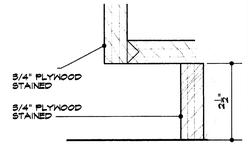

15 detail
half size

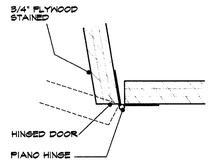

16 detail
half size

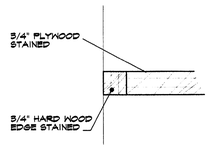

17 detail
half size

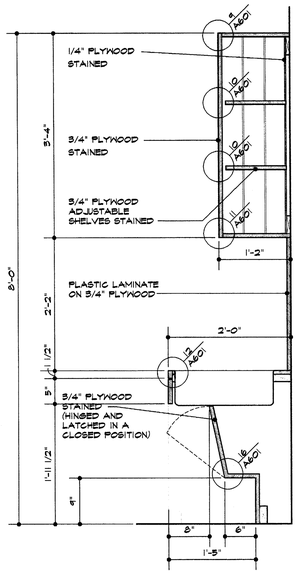

8 cabinet section
1"=1'-0"

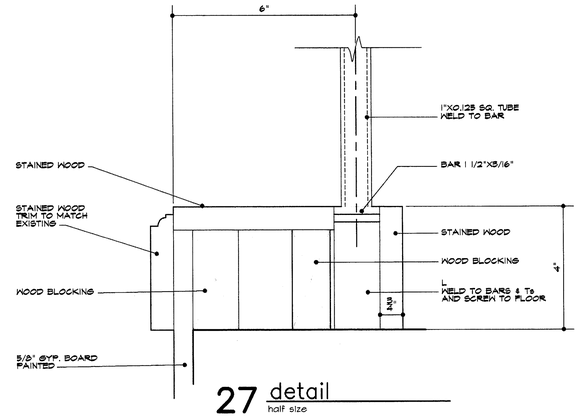

27 detail
half size

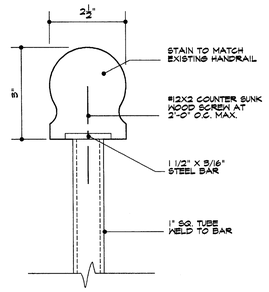

28 detail
half size

NOTE:
TYPICAL VERTICAL GAP BETWEEN DOORS AND DRAWERS

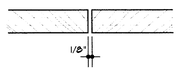

detail
half size

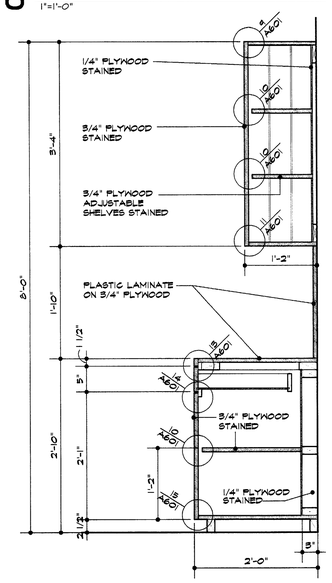

1 cabinet section
1"=1'-0"

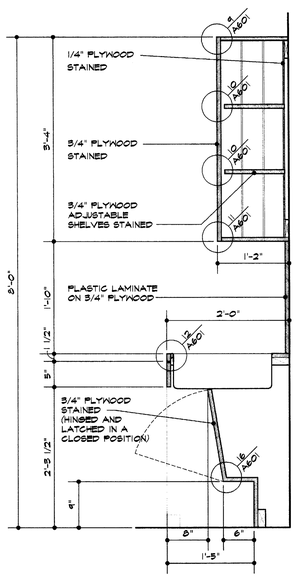

2 cabinet section @ sink
1"=1'-0"

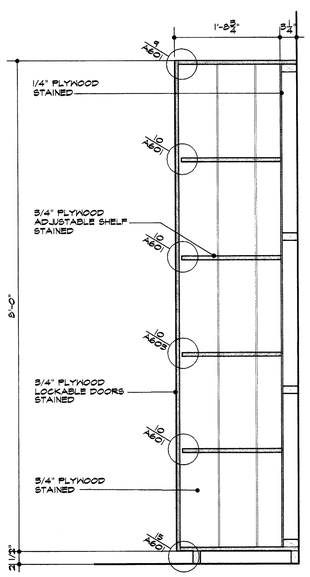

3 cabinet section
1"=1'-0"

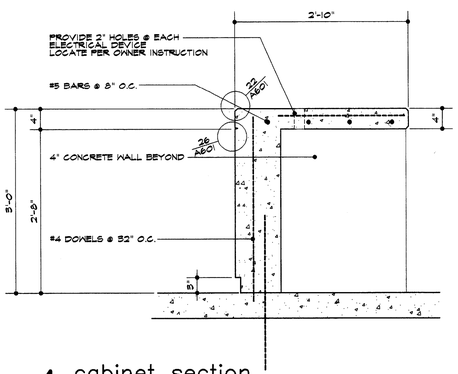

4 cabinet section
1"=1'-0"

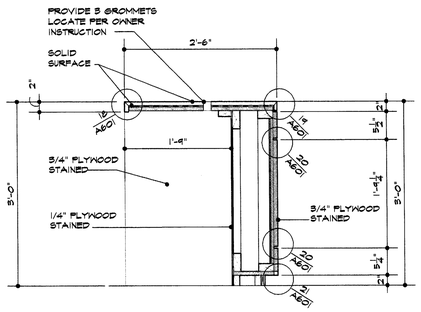

6 cabinet section
1"=1'-0"

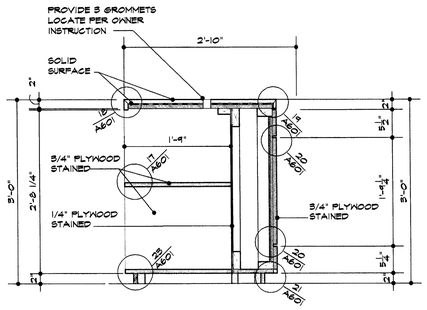

7 cabinet section
1"=1'-0"

5 cabinet section
not used

ISSUE DATE
FEB. 20, 2002

REVISIONS

ADDISON ATHLETIC CLUB EXPANSION AND LEISURE POOL
ADDISON, TEXAS

RON HOBBS ARCHITECTS
614 W. MAIN ST. SUITE #200 GARLAND, TEXAS 75040
(972) 494-0174 FAX (972) 494-0722

REGISTERED ARCHITECT
RONALD E. HOBBS
STATE OF TEXAS

JOB NUMBER
0012

SHEET NAME
CABINET SECTIONS & DETAILS

SHEET NUMBER
A601

floor finish legend

- CARPET TYPE "C-1"
- CARPET TYPE "C-2"
- CARPET TYPE "C-3"
- CARPET TYPE "C-4"
- CERAMIC TILE 2"x2"
- SEALED CONCRETE
- WEIGHT ROOM FLOORING TYPE "1"
- WEIGHT ROOM FLOORING TYPE "2"

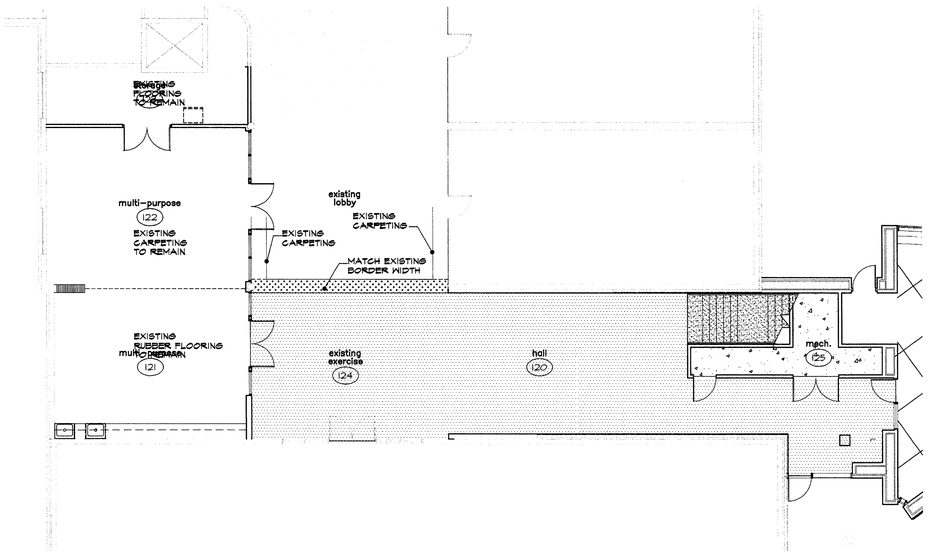

2 lower level floor finish plan
1/8"=1'-0"

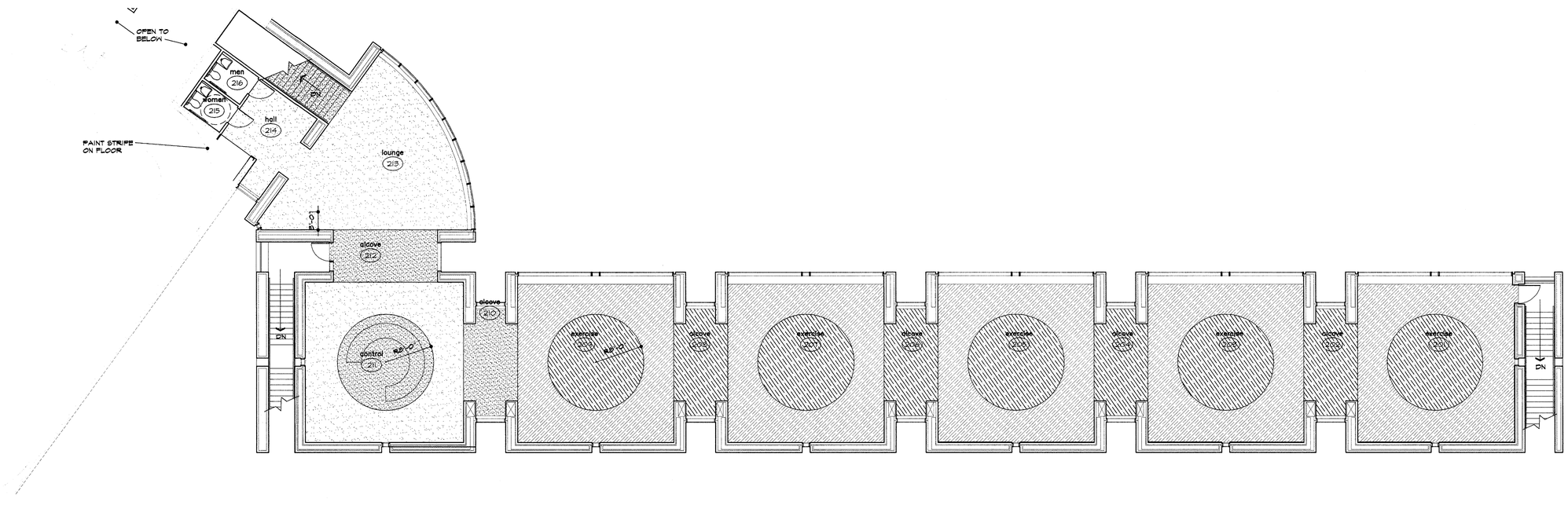

1 upper level floor finish plan
1/8"=1'-0"

ISSUE DATE
FEB. 20, 2002

REVISIONS

ADDISON ATHLETIC CLUB EXPANSION
AND
LEISURE POOL
ADDISON, TEXAS

RON HOBBS ARCHITECTS
614 W. MAIN ST. SUITE #200 GARLAND, TEXAS 75040
(972) 494-0174 FAX (972) 494-0722

JOB NUMBER
0012

SHEET NAME
1/8" SCALE
FLOOR FINISH PLAN

SHEET NUMBER
A701

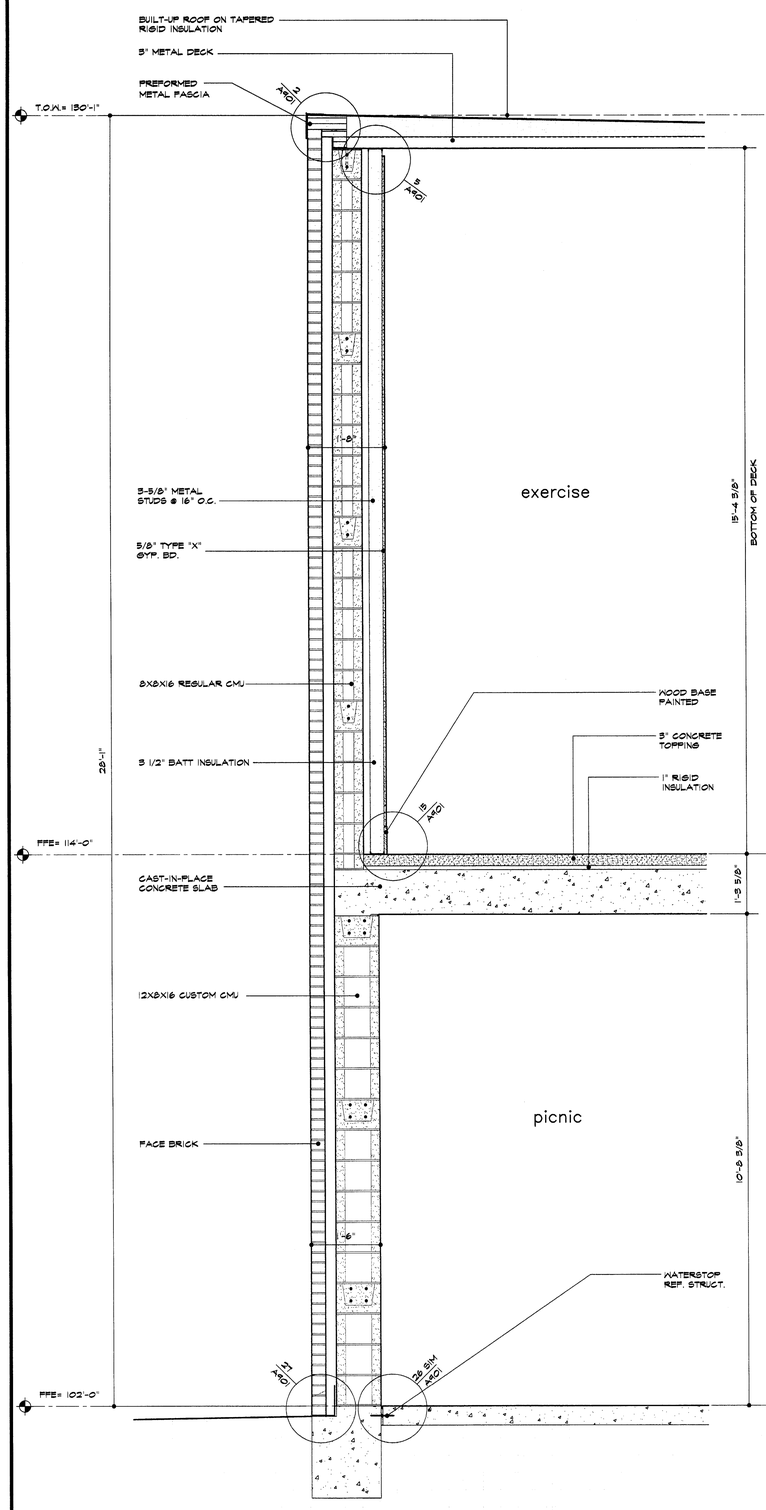

1 wall section
3/4"=1'-0"

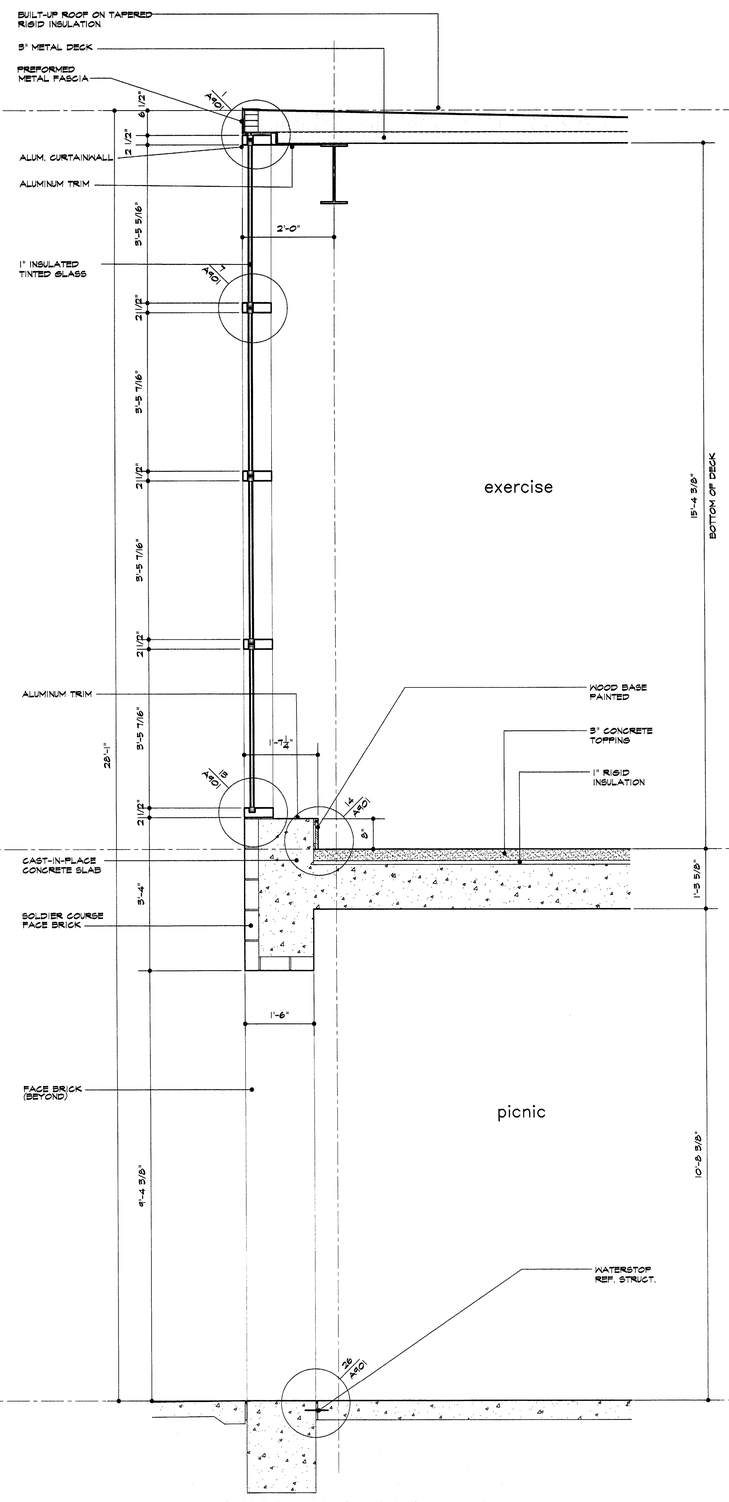

2 wall section
3/4"=1'-0"

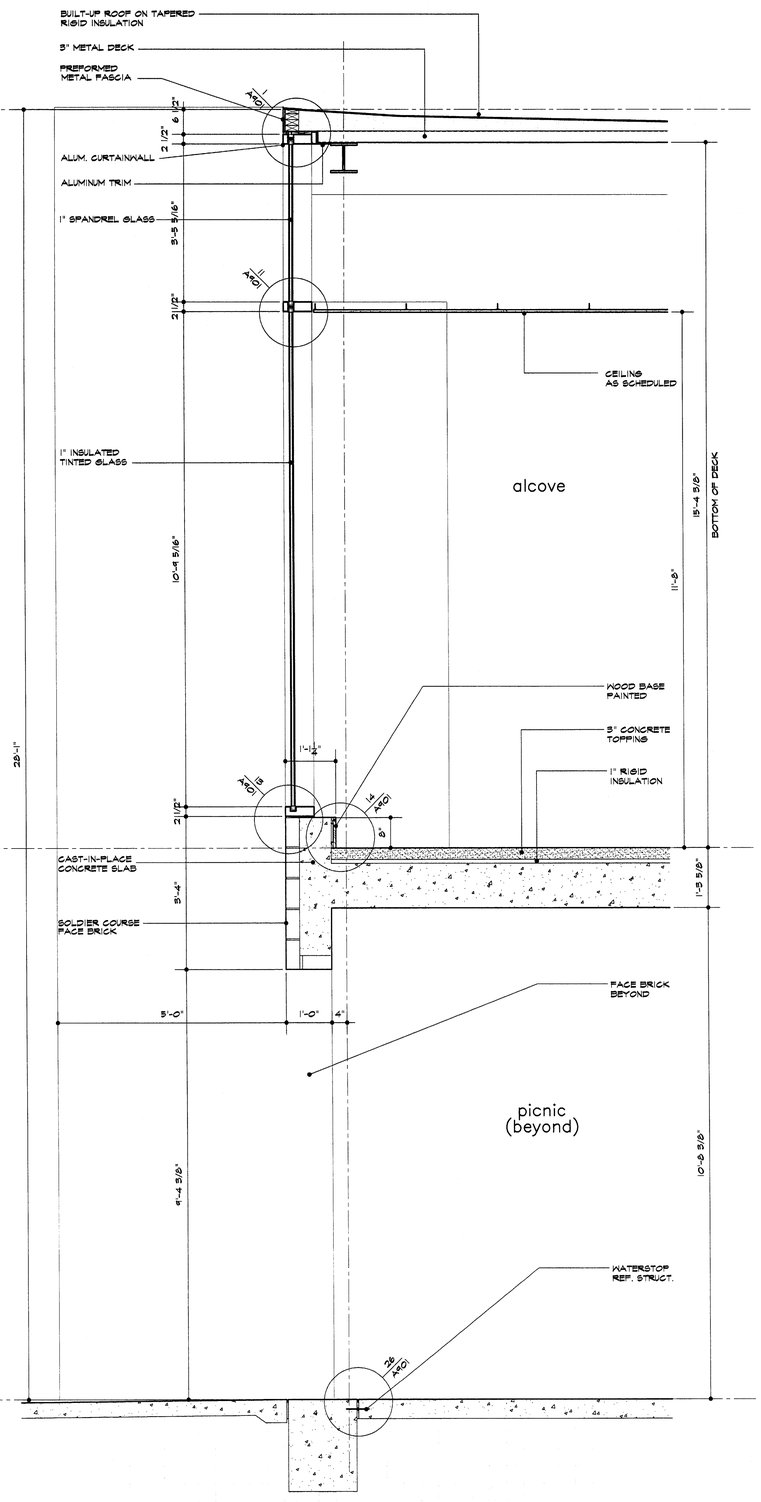

3 wall section
3/4"=1'-0"

ISSUE DATE
FEB. 20, 2002

REVISIONS

ADDISON ATHLETIC CLUB EXPANSION AND LEISURE POOL
ADDISON, TEXAS

RON HOBBS ARCHITECTS
614 W. MAIN ST. SUITE #200 GARLAND, TEXAS 75040
(972) 494-0174 FAX (972) 494-0722

REGISTERED ARCHITECT RONALD L. HOBBS STATE OF TEXAS

JOB NUMBER
0012

SHEET NAME
3/4" SCALE WALL SECTIONS

SHEET NUMBER
A801

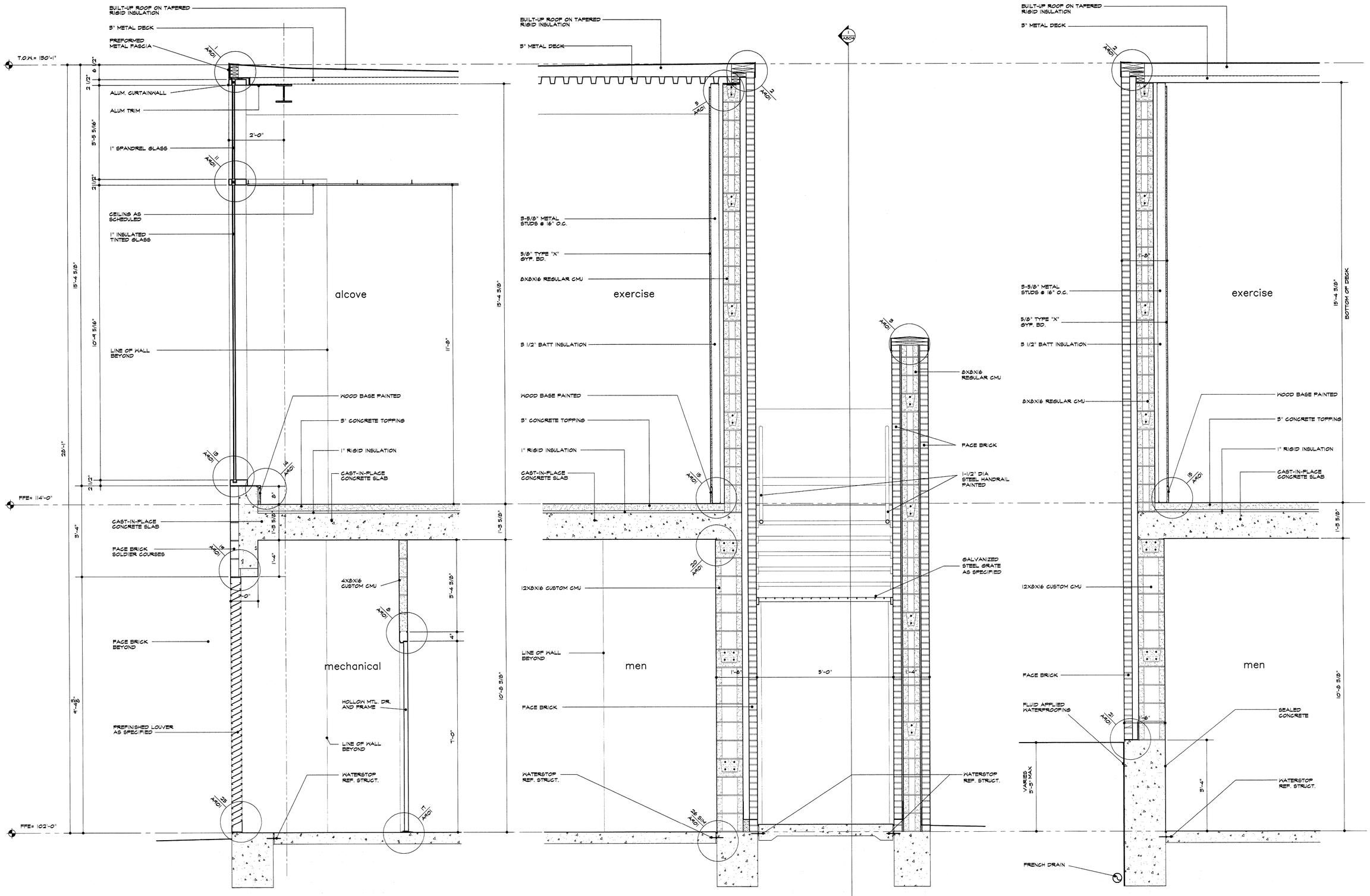

1 wall section
3/4"=1'-0"

2 wall section
3/4"=1'-0"

3 wall section
3/4"=1'-0"

ISSUE DATE
FEB. 20, 2002

REVISIONS

ADDISON ATHLETIC CLUB EXPANSION AND LEISURE POOL
ADDISON, TEXAS

RON HOBBS ARCHITECTS
614 W. MAIN ST. SUITE #200 GARLAND, TEXAS 75040
(972) 494-0174 FAX (972) 494-0722

REGISTERED ARCHITECT RONALD L. HOBBS STATE OF TEXAS

JOB NUMBER
0012

SHEET NAME
3/4" SCALE WALL SECTIONS

SHEET NUMBER
A802

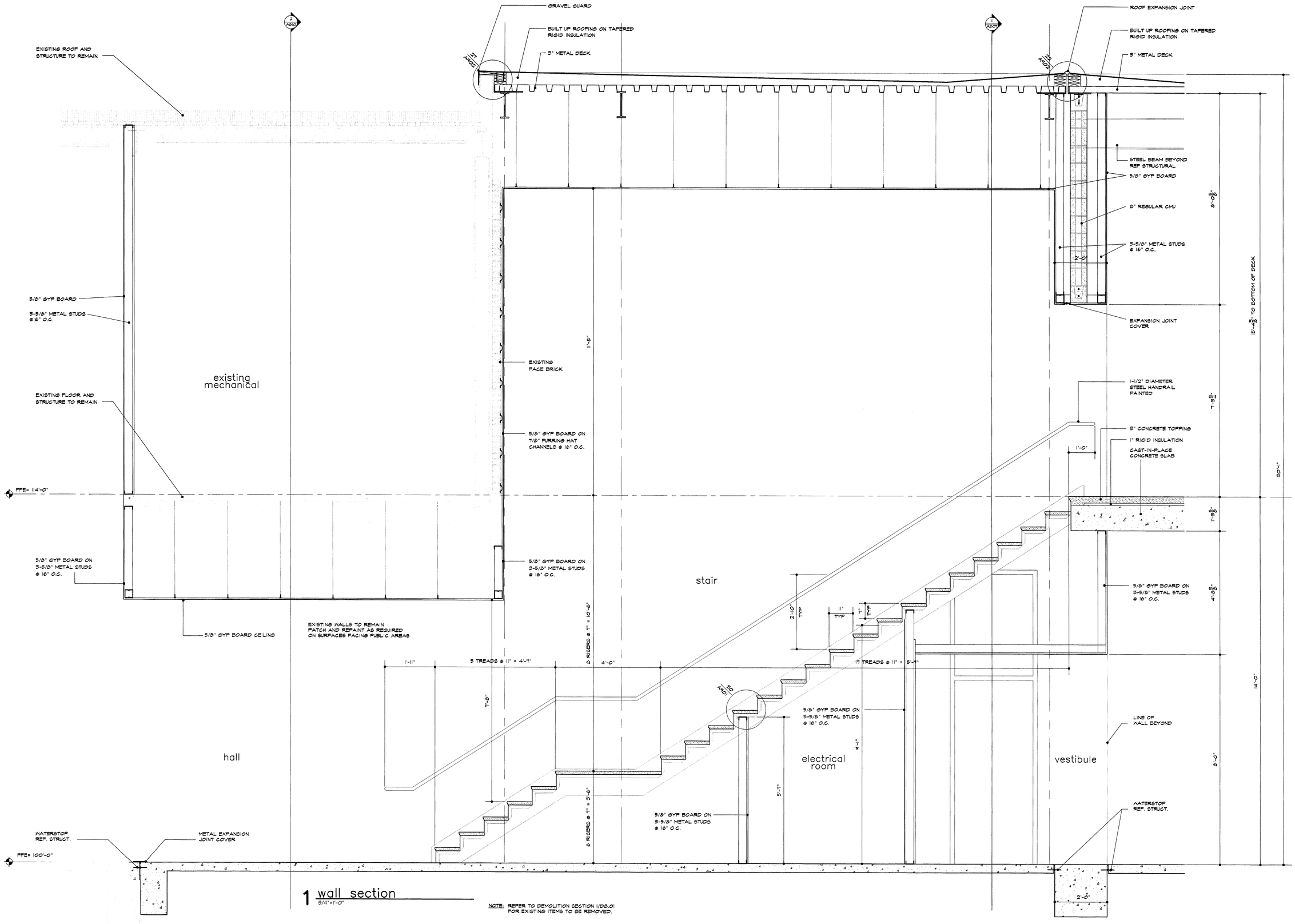

1 wall section
3/4"=1'-0"

NOTE: REFER TO DEMOLITION SECTION 1/D8.01 FOR EXISTING ITEMS TO BE REMOVED.

ISSUE DATE
FEB. 20, 2002

REVISIONS

ADDISON ATHLETIC CLUB EXPANSION AND LEISURE POOL
ADDISON, TEXAS

RON HOBBS ARCHITECTS
614 W. MAIN ST. SUITE #200 GARLAND, TEXAS 75040
(972) 494-0174 FAX (972) 494-0722

JOB NUMBER
0012

SHEET NAME
3/4" SCALE WALL SECTIONS

SHEET NUMBER
A803

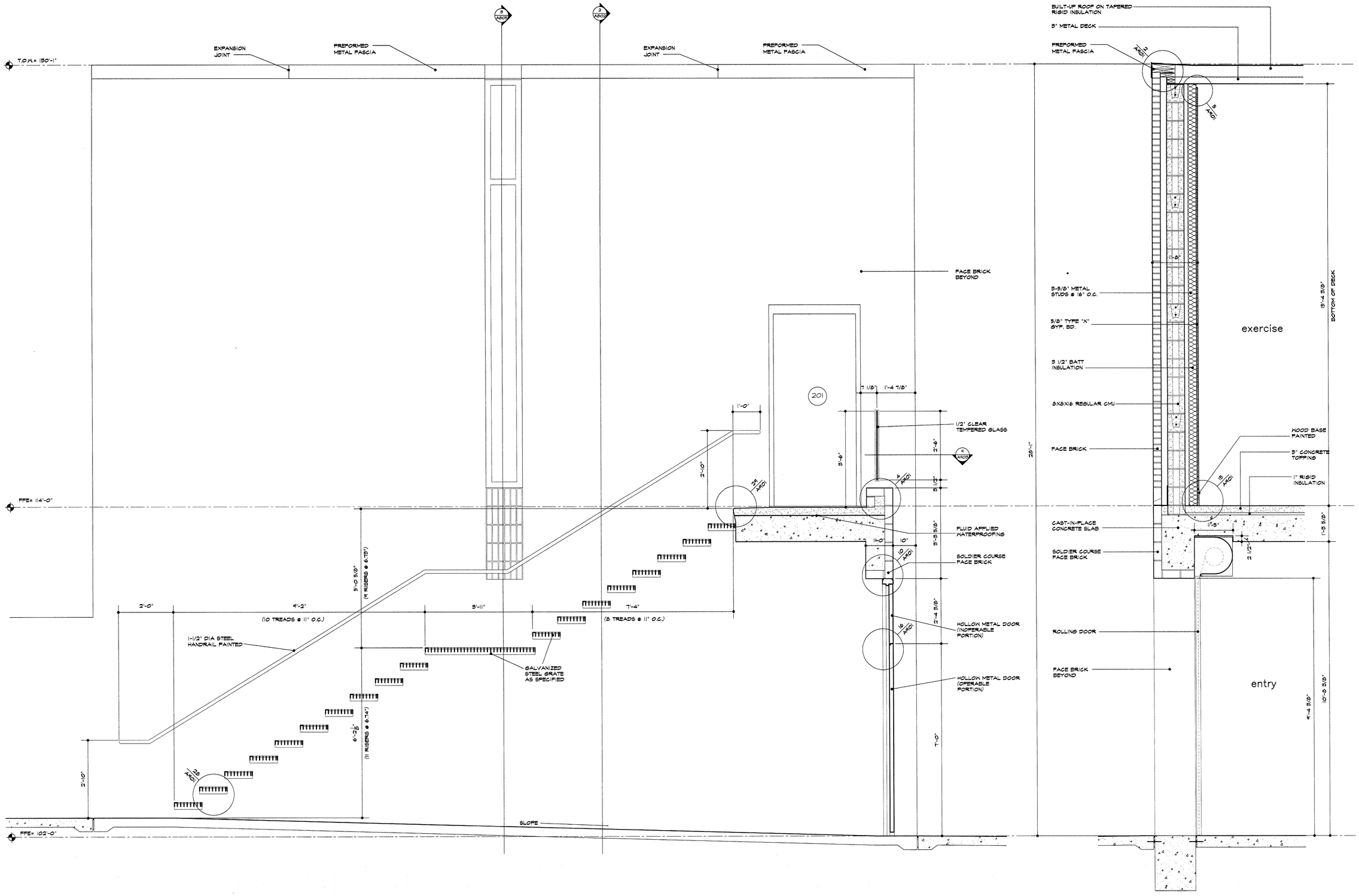

1 wall section
3/4"=1'-0"

2 wall section
3/4"=1'-0"

ISSUE DATE
FEB. 20, 2002

REVISIONS

ADDISON ATHLETIC CLUB EXPANSION AND LEISURE POOL
ADDISON, TEXAS

RON HOBBS ARCHITECTS
614 W. MAIN ST. SUITE #200 GARLAND, TEXAS 75040
(972) 494-0174 FAX (972) 494-0722

JOB NUMBER
0012

SHEET NAME
3/4" SCALE WALL SECTIONS

SHEET NUMBER
A804

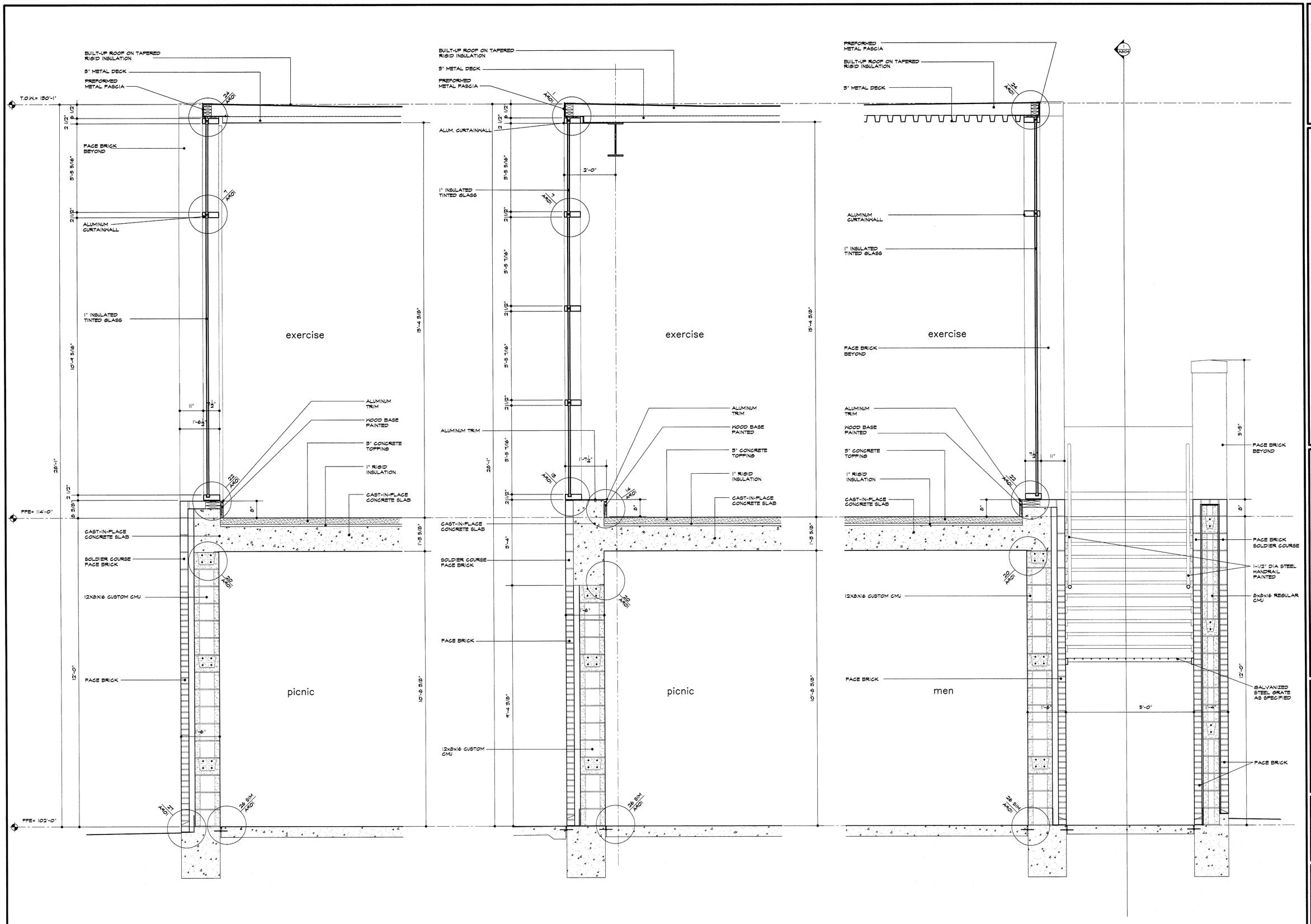

1 wall section
3/4"=1'-0"

2 wall section
3/4"=1'-0"

3 wall section
3/4"=1'-0"

ISSUE DATE
FEB. 20, 2002

REVISIONS

ADDISON ATHLETIC CLUB EXPANSION AND LEISURE POOL
ADDISON, TEXAS

RON HOBBS ARCHITECTS
614 W. MAIN ST. SUITE #200 GARLAND, TEXAS 75040
(972) 494-0174 FAX (972) 494-0722

JOB NUMBER
0012

SHEET NAME
3/4" SCALE WALL SECTIONS

SHEET NUMBER
A805

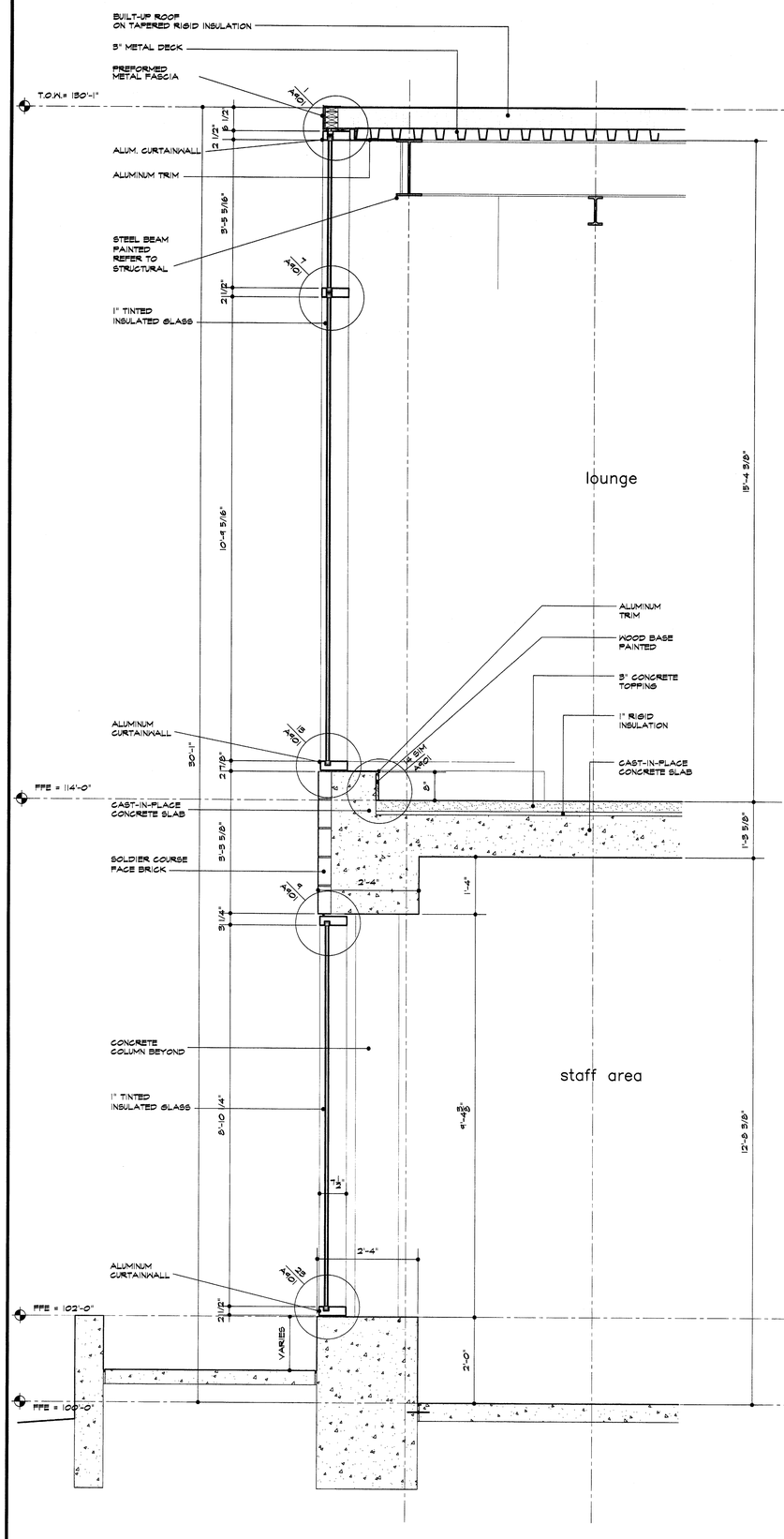

1 wall section
3/4"=1'-0"

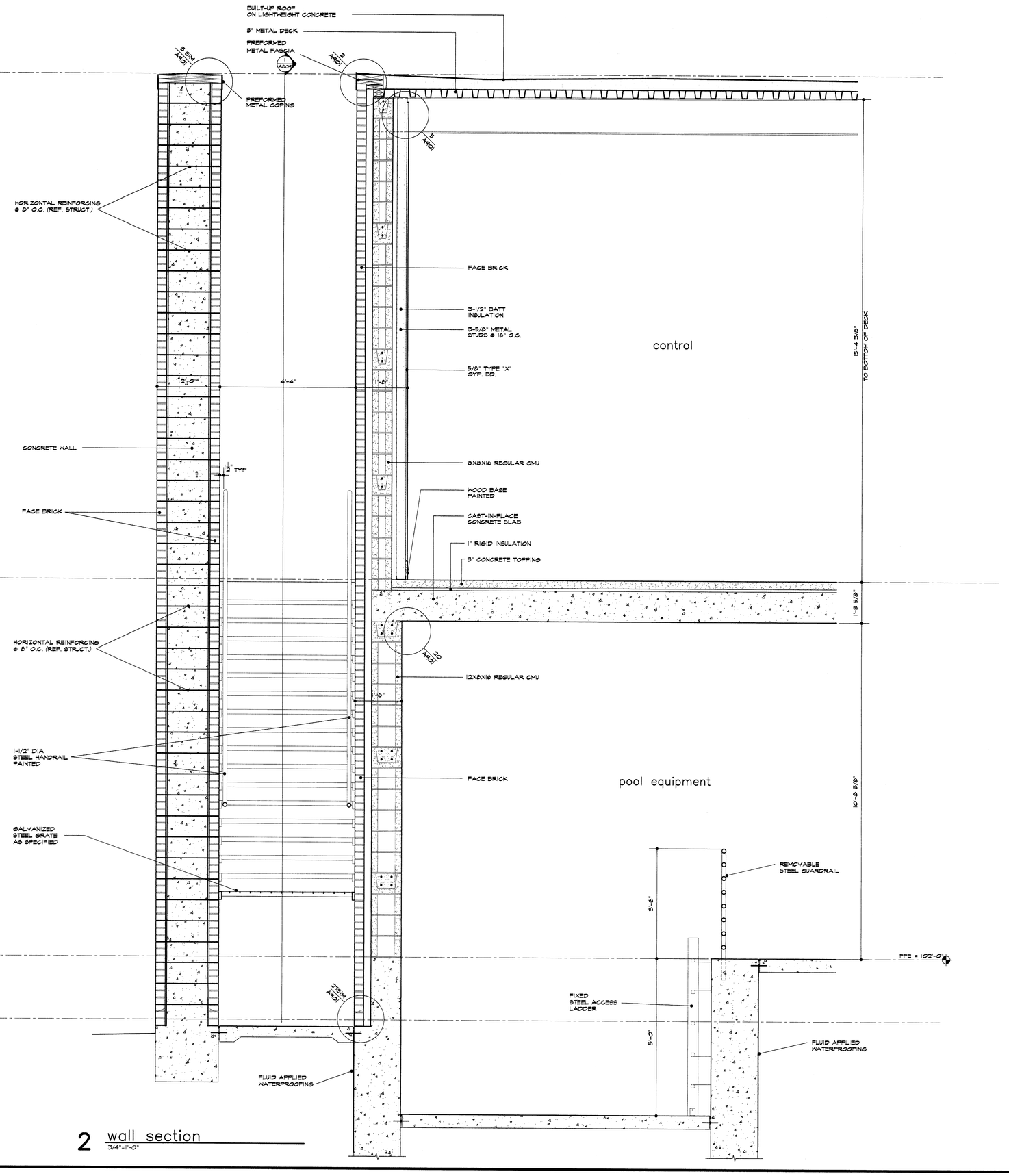

2 wall section
3/4"=1'-0"

ISSUE DATE
FEB. 20, 2002

REVISIONS

ADDISON ATHLETIC CLUB EXPANSION
AND
LEISURE POOL
ADDISON, TEXAS

RON HOBBS ARCHITECTS
614 W. MAIN ST. SUITE #200 GARLAND, TEXAS 75040
(972) 494-0174 FAX (972) 494-0722

JOB NUMBER
0012

SHEET NAME
3/4" SCALE
WALL SECTIONS

SHEET NUMBER
A806

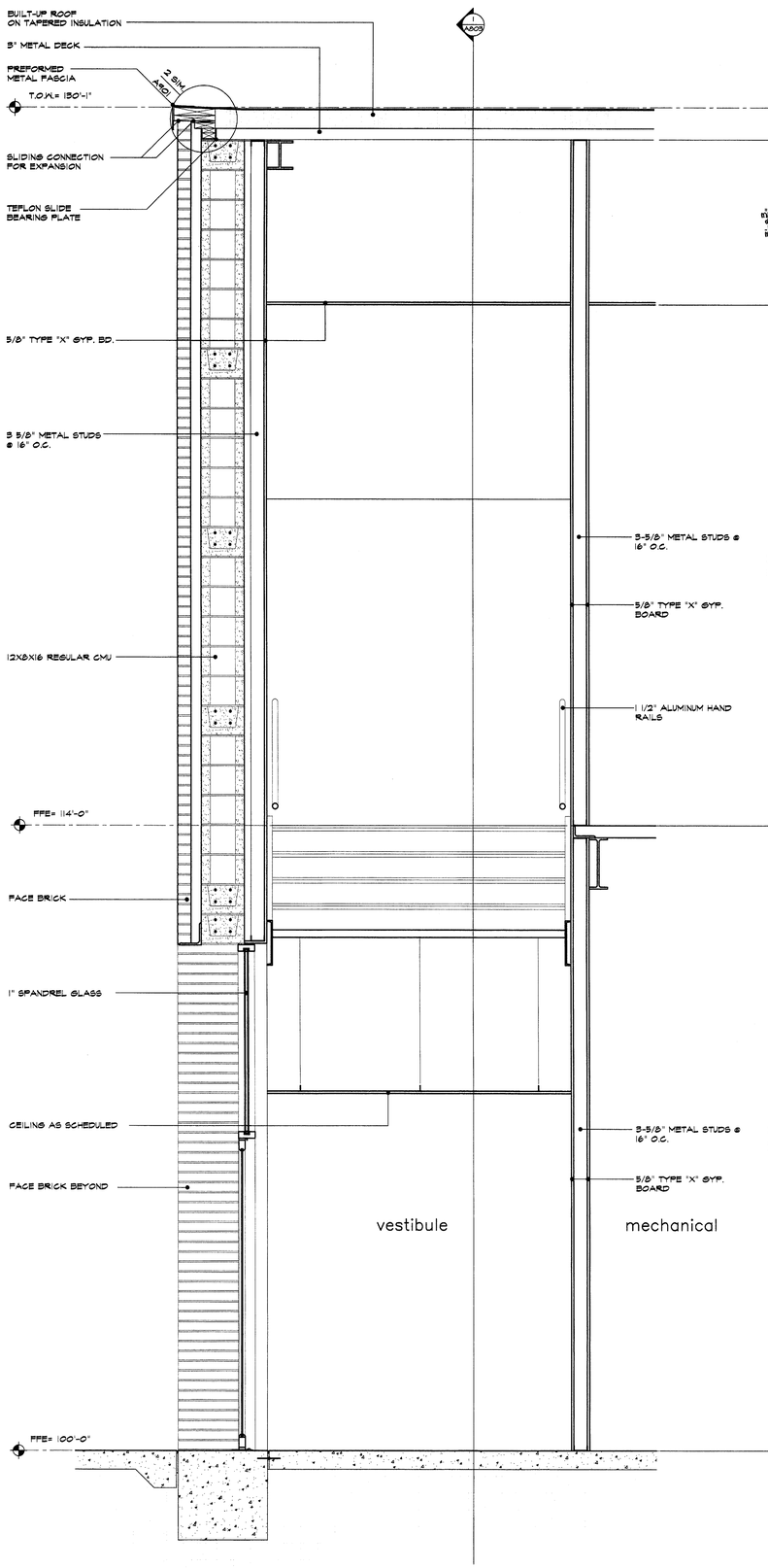

1 wall section
3/4"=1'-0"

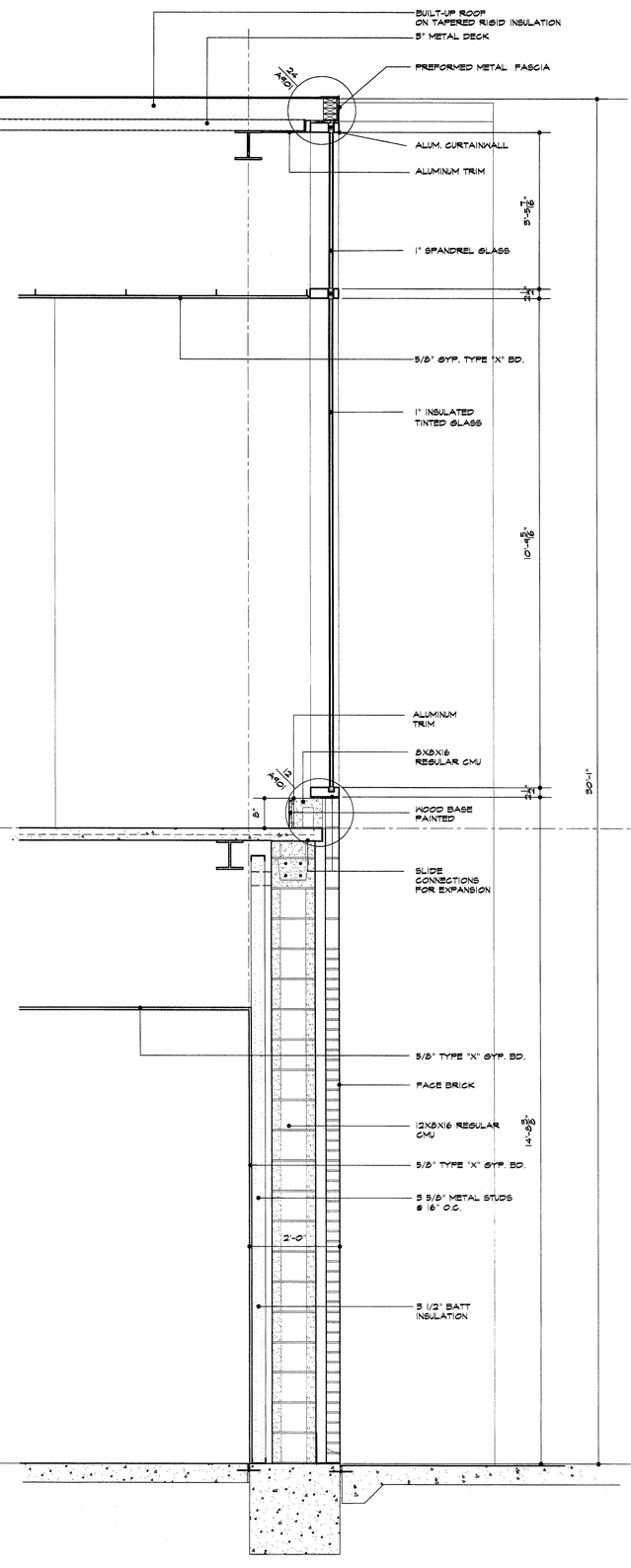

2 wall section
3/4"=1'-0"

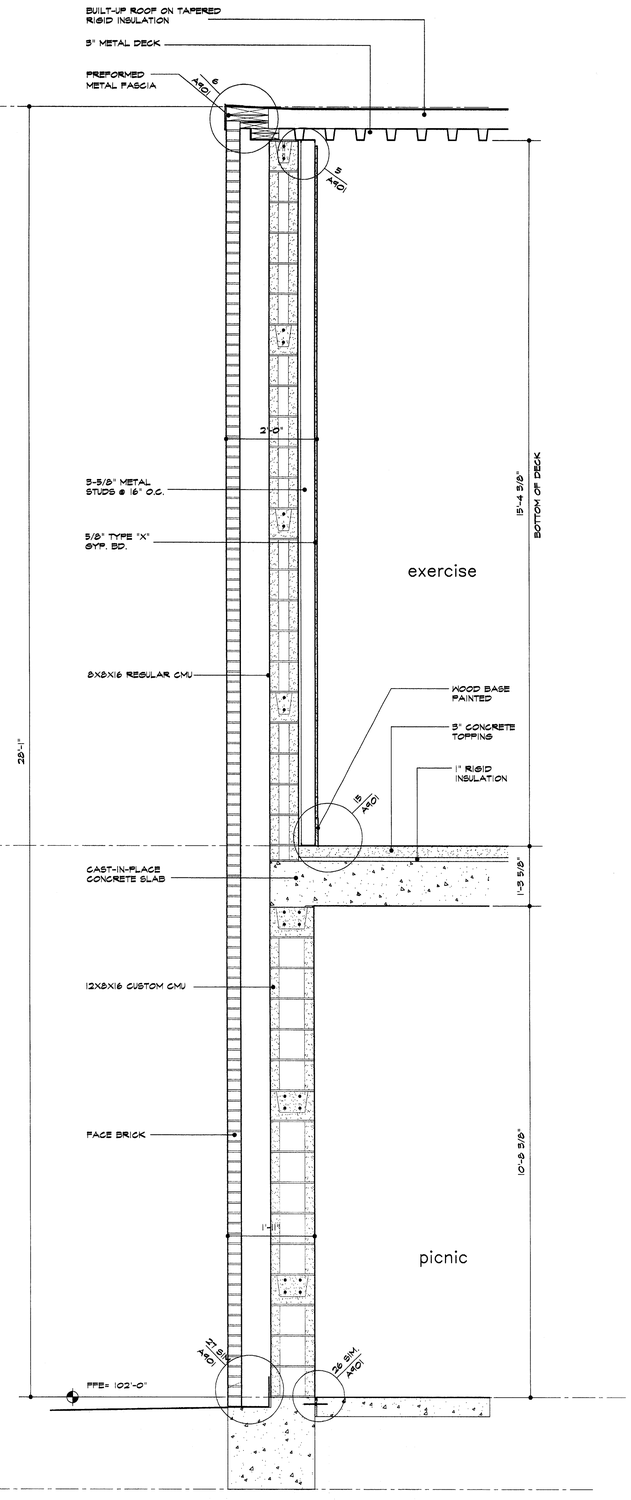

3 wall section
3/4"=1'-0"

ISSUE DATE
FEB. 20, 2002

REVISIONS

ADDISON ATHLETIC CLUB EXPANSION AND LEISURE POOL
ADDISON, TEXAS

RON HOBBS ARCHITECTS
614 W. MAIN ST. SUITE #200 GARLAND, TEXAS 75040
(972) 494-0174 FAX (972) 494-0722

JOB NUMBER
0012

SHEET NAME
3/4" SCALE WALL SECTIONS

SHEET NUMBER
A807

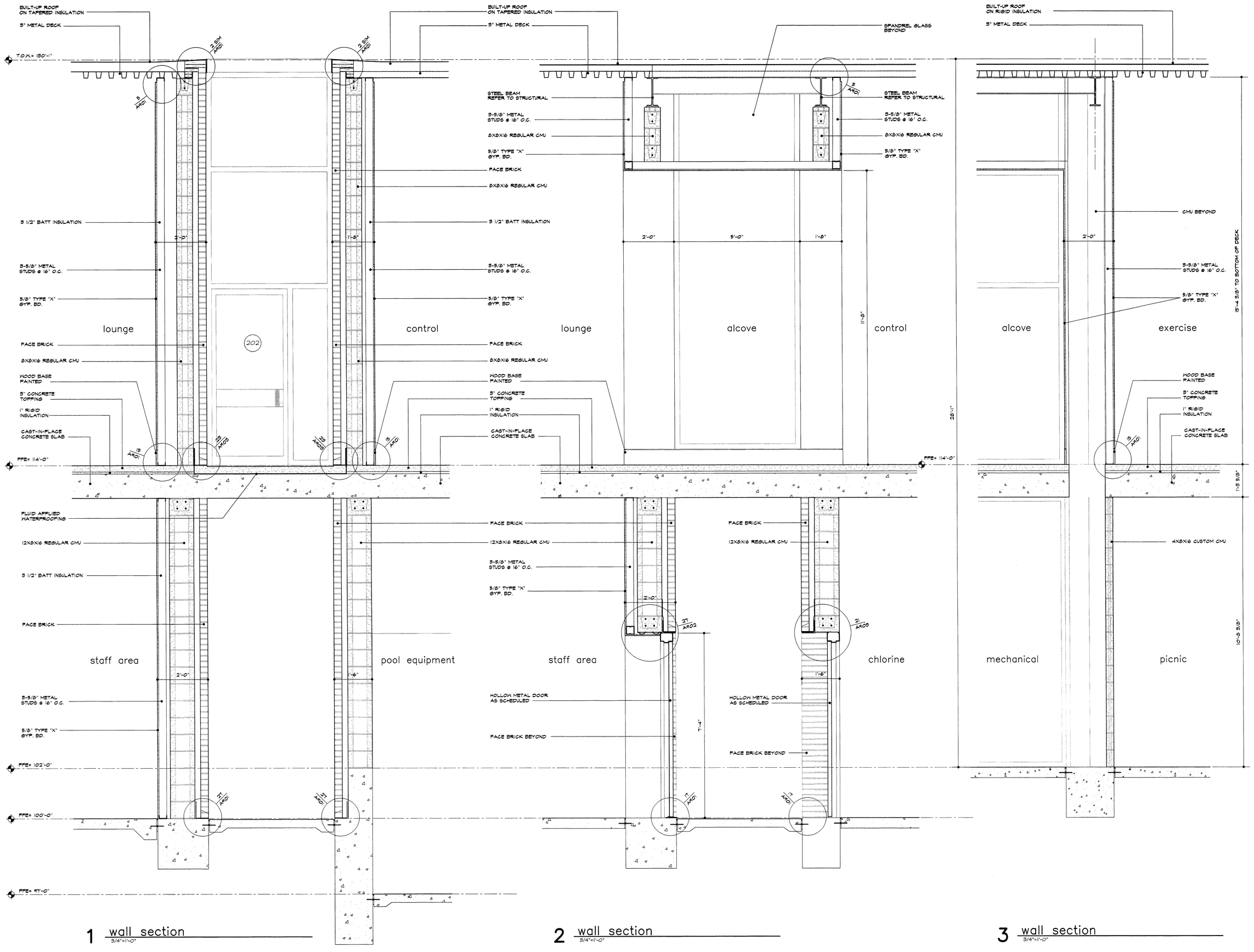

1 wall section
3/4"=1'-0"

2 wall section
3/4"=1'-0"

3 wall section
3/4"=1'-0"

ISSUE DATE
FEB. 20, 2002

REVISIONS

ADDISON ATHLETIC CLUB EXPANSION AND LEISURE POOL
ADDISON, TEXAS

RON HOBBS ARCHITECTS
614 W. MAIN ST. SUITE #200 GARLAND, TEXAS 75040
(972) 494-0174 FAX (972) 494-0722

JOB NUMBER
0012

SHEET NAME
3/4" SCALE WALL SECTIONS

SHEET NUMBER
A808

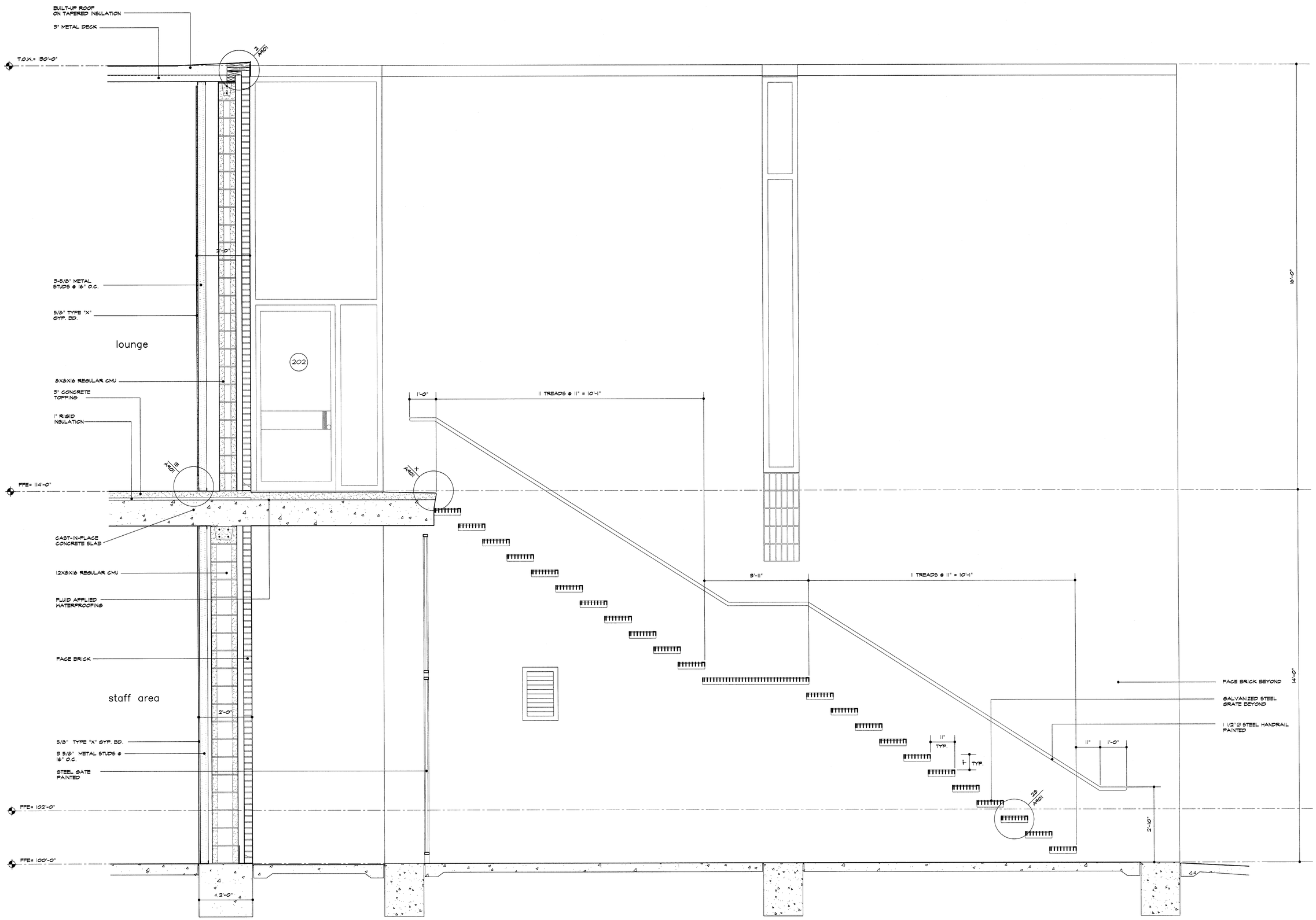

1 wall section
3/4"=1'-0"

ISSUE DATE
FEB. 20, 2002

REVISIONS

ADDISON ATHLETIC CLUB EXPANSION
AND
LEISURE POOL
ADDISON, TEXAS

RON HOBBS ARCHITECTS
614 W. MAIN ST. SUITE #200 GARLAND, TEXAS 75040
(972) 494-0174 FAX (972) 494-0722

JOB NUMBER
0012

SHEET NAME
3/4" SCALE WALL SECTIONS

SHEET NUMBER
A809

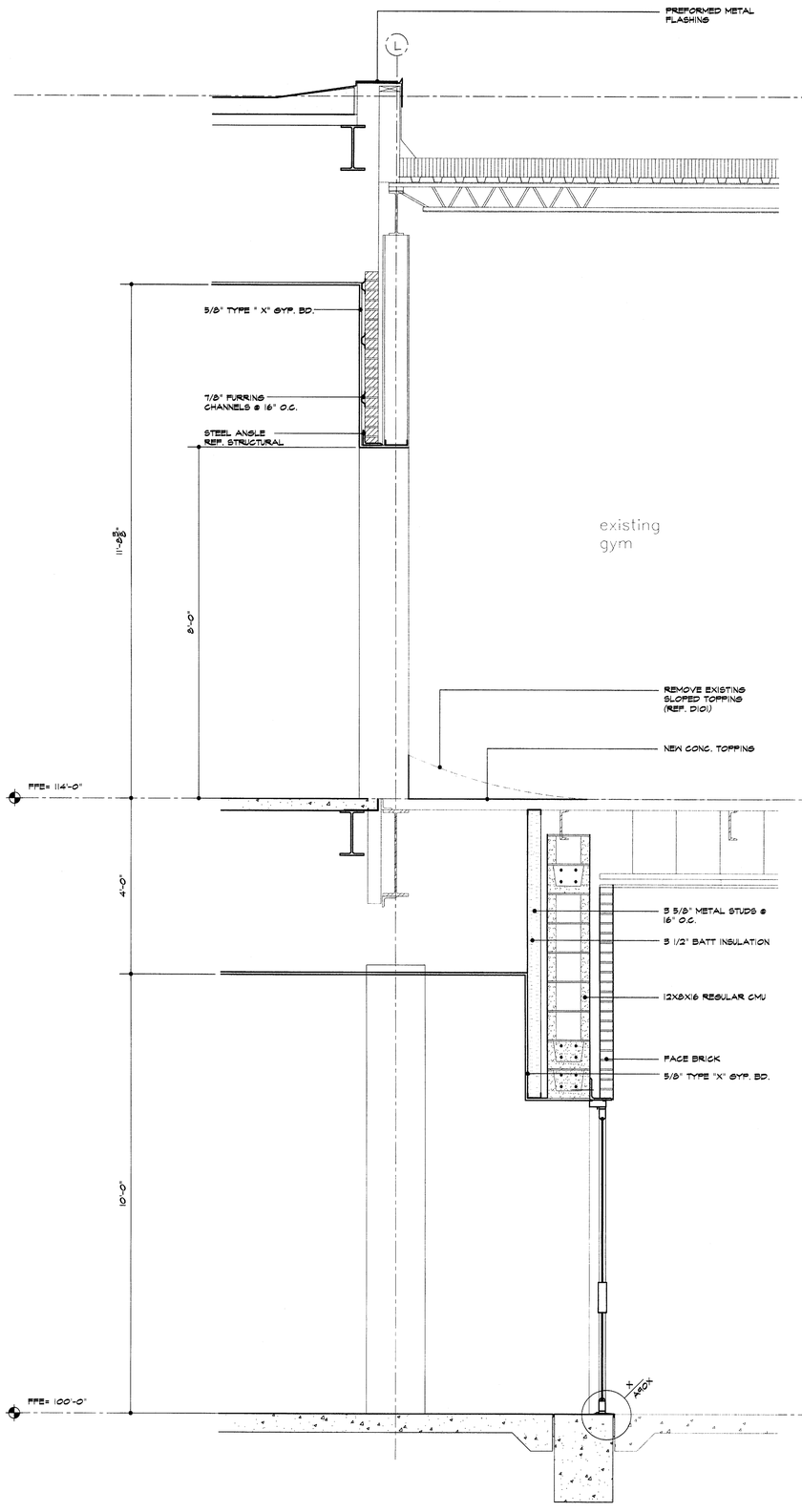

1 wall section
3/4"=1'-0"

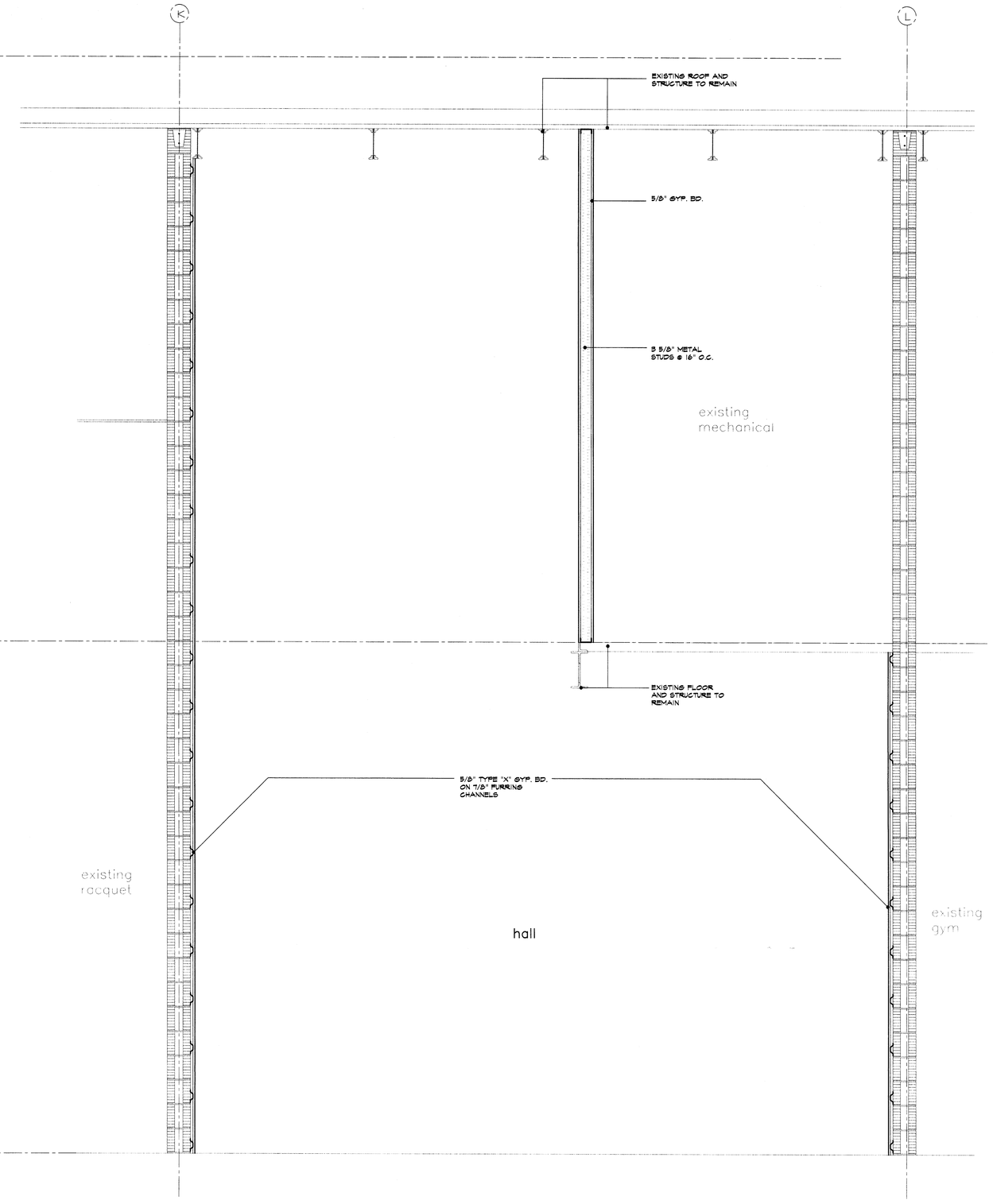

2 wall section
3/4"=1'-0"

ISSUE DATE
FEB. 20, 2002

REVISIONS

ADDISON ATHLETIC CLUB EXPANSION AND LEISURE POOL
ADDISON, TEXAS

RON HOBBS ARCHITECTS
614 W. MAIN ST. SUITE #200 GARLAND, TEXAS 75040
(972) 494-0174 FAX (972) 494-0722

JOB NUMBER
0012

SHEET NAME
3/4" SCALE WALL SECTIONS

SHEET NUMBER
A810

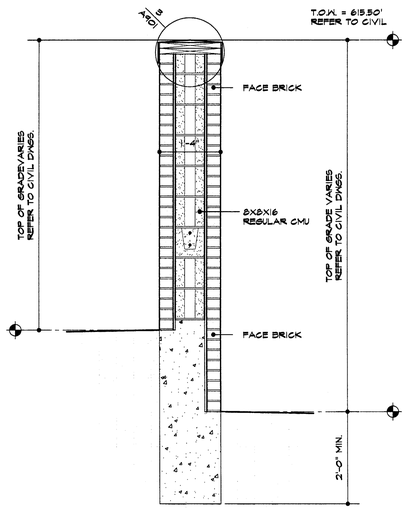

7 wall section
3/4"=1'-0"

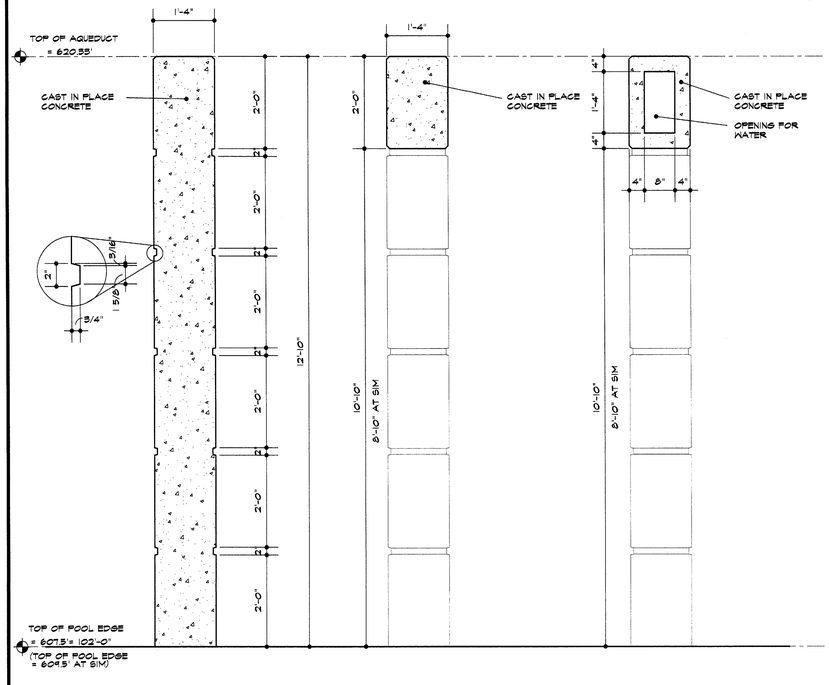

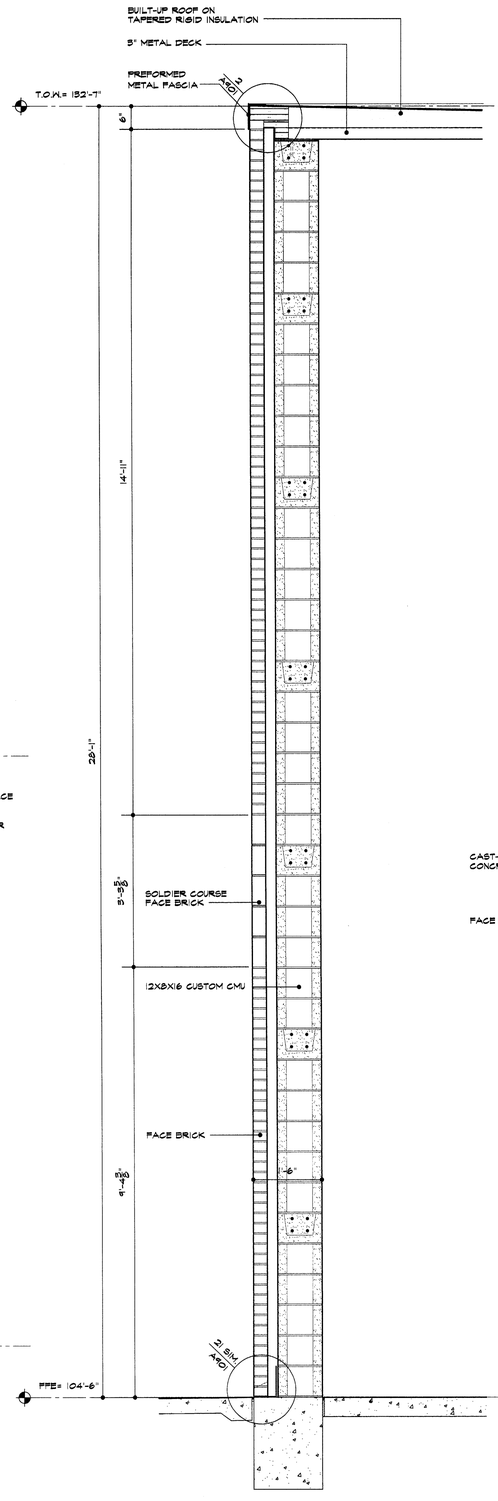

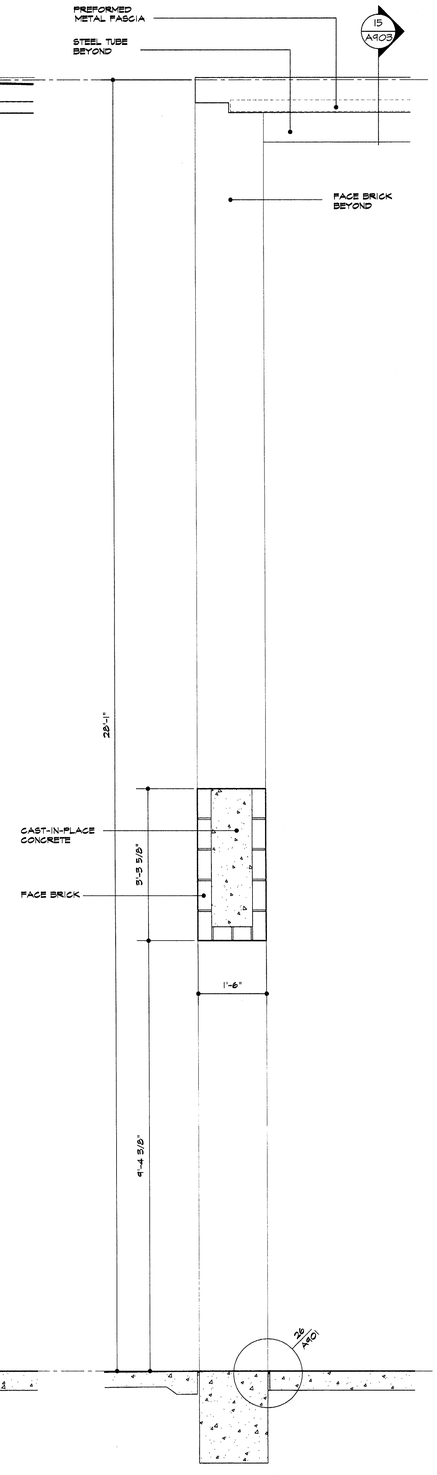

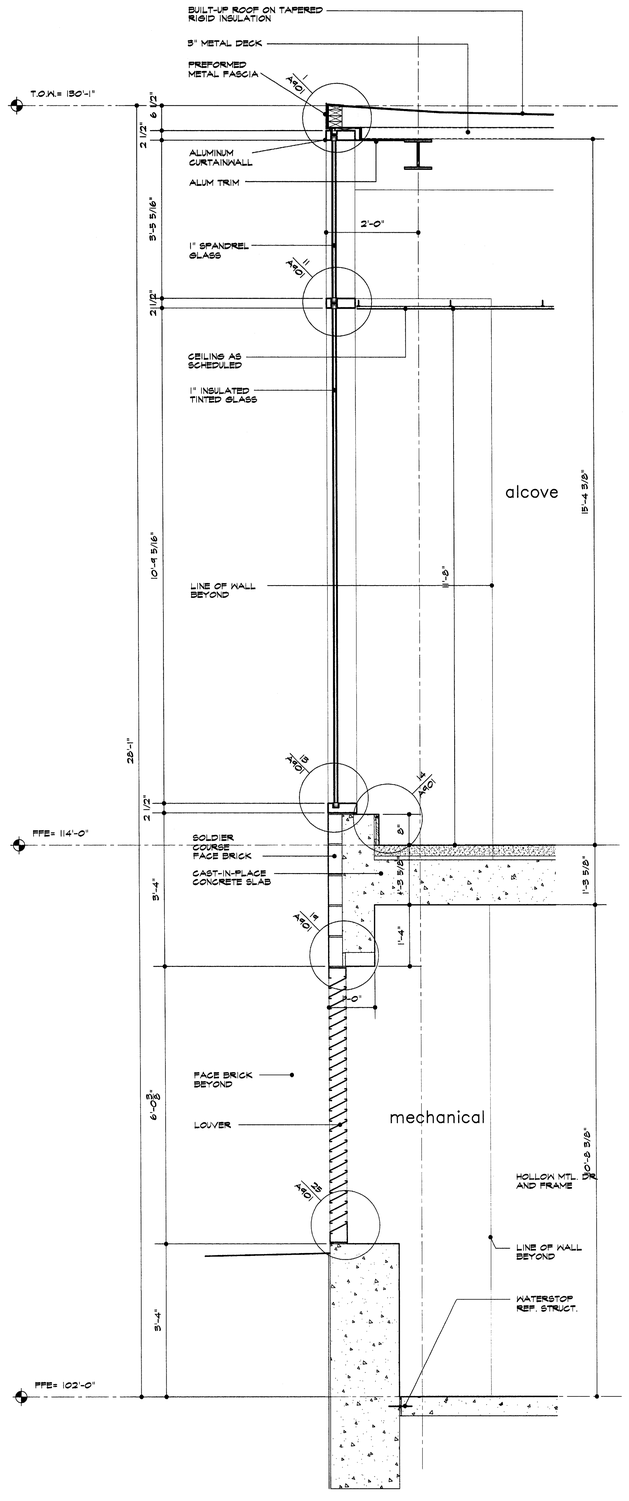

1 wall section
3/4"=1'-0"

2 wall section
3/4"=1'-0"

3 wall section
3/4"=1'-0"

4 pavillion wall section–alt #4
3/4"=1'-0"

5 pavillion wall section–alt #4
3/4"=1'-0"

6 wall section
3/4"=1'-0"

ISSUE DATE
FEB. 20, 2002

REVISIONS

ADDISON ATHLETIC CLUB EXPANSION AND LEISURE POOL
ADDISON, TEXAS

RON HOBBS ARCHITECTS
614 W. MAIN ST. SUITE #200 GARLAND, TEXAS 75040
(972) 494-0174 FAX (972) 494-0722

JOB NUMBER
0012

SHEET NAME
3/4" SCALE
WALL SECTIONS

SHEET NUMBER
A811

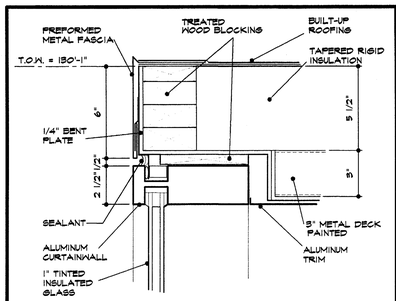

1 fascia/curtainwall hd detail
3"=1'-0"

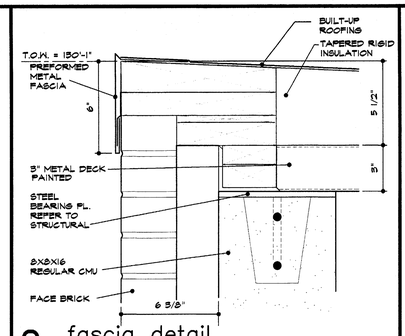

2 fascia detail
3"=1'-0"

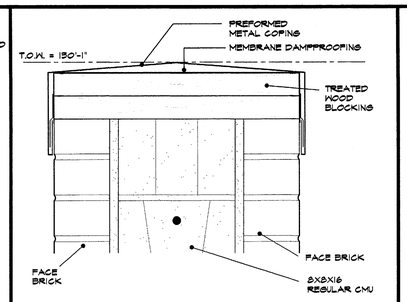

3 wall cap detail
3"=1'-0"

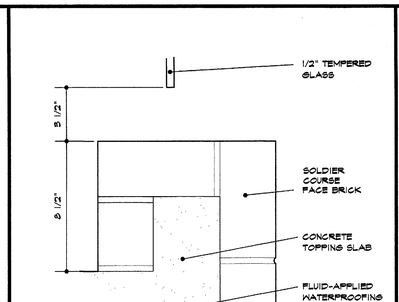

4 masonry detail
3"=1'-0"

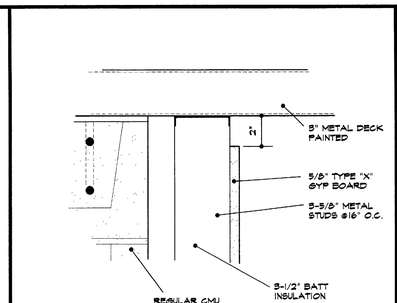

5 detail
3"=1'-0"

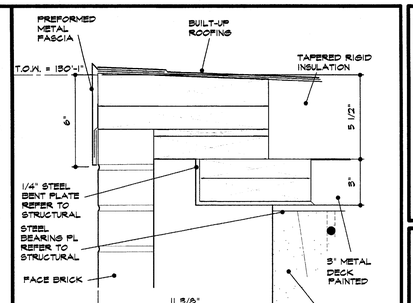

6 fascia detail
3"=1'-0"

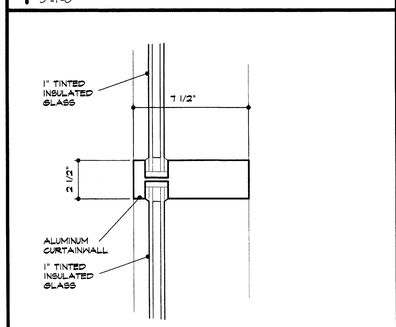

7 curtainwall detail
3"=1'-0"

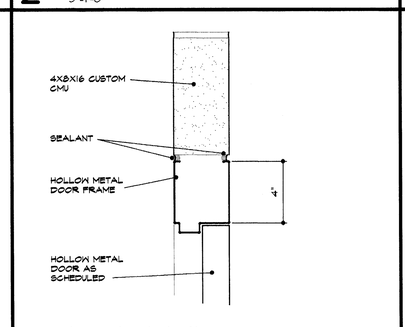

8 head detail
3"=1'-0"

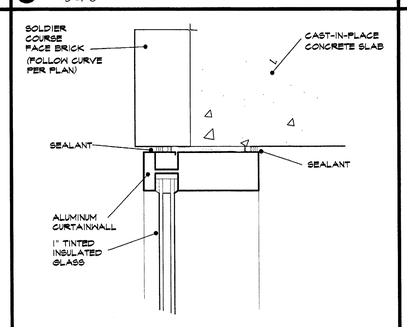

9 curtainwall head detail
3"=1'-0"

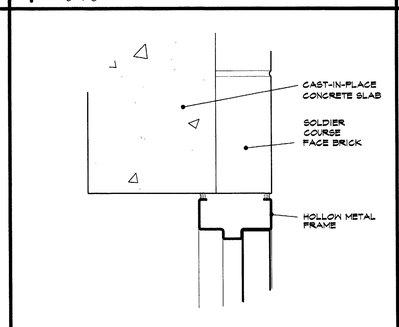

10 h.m. head detail
3"=1'-0"

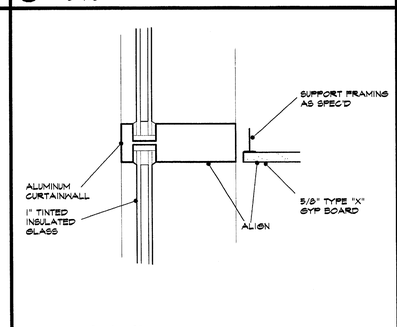

11 detail
3"=1'-0"

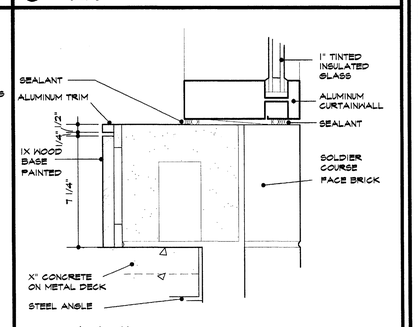

12 detail
3"=1'-0"

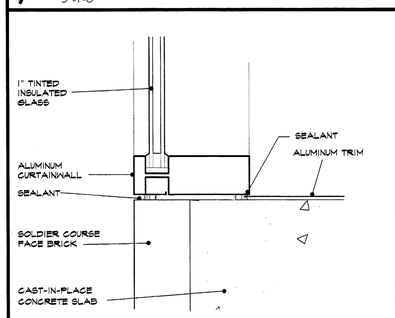

13 curtainwall sill detail
3"=1'-0"

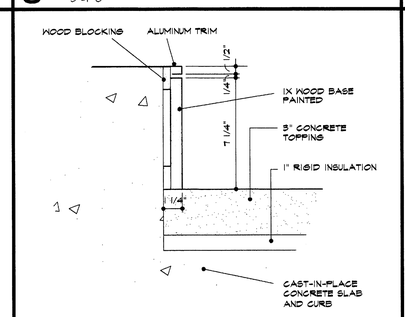

14 base detail
3"=1'-0"

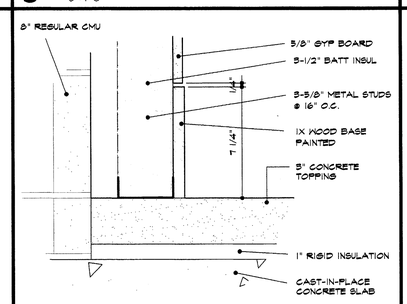

15 base detail
3"=1'-0"

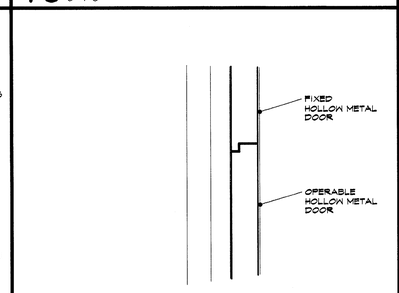

16 h.m. head detail
3"=1'-0"

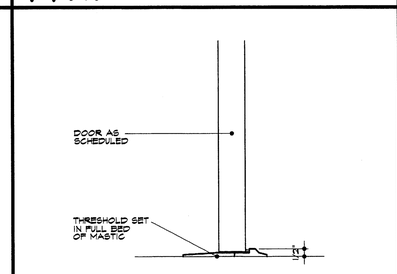

17 threshold detail
3"=1'-0"

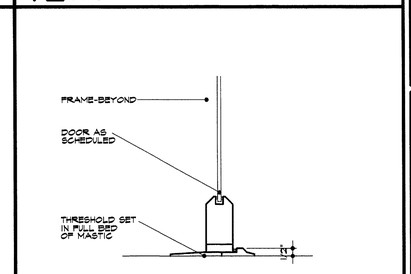

18 threshold detail
3"=1'-0"

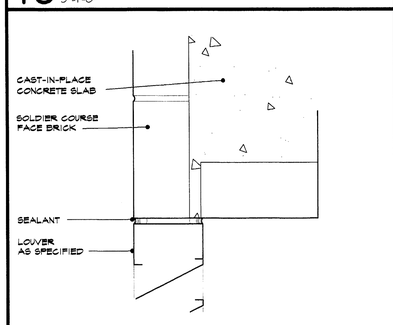

19 louver detail
3"=1'-0"

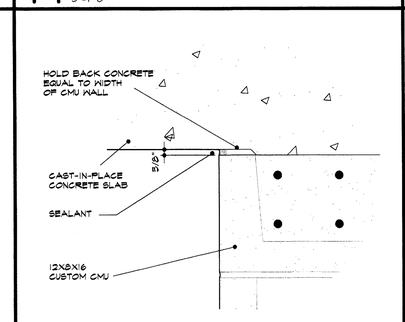

20 concrete detail
3"=1'-0"

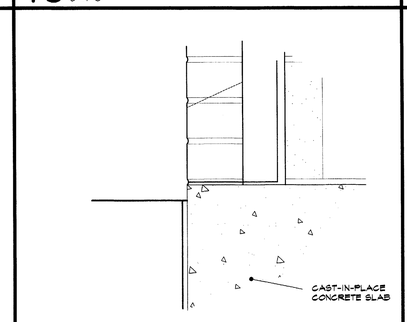

21 flashing detail
3"=1'-0"

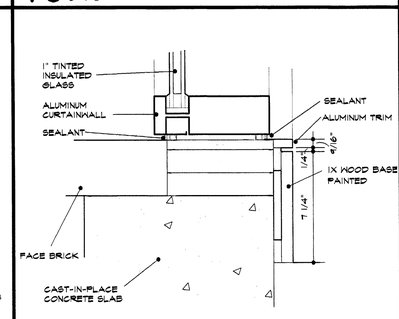

22 curtainwall sill detail
3"=1'-0"

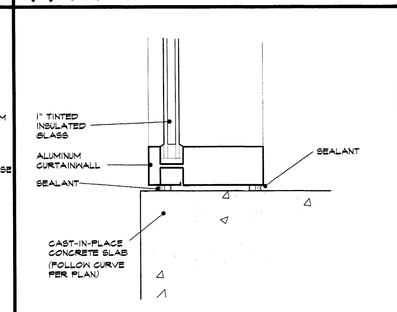

23 detail
3"=1'-0"

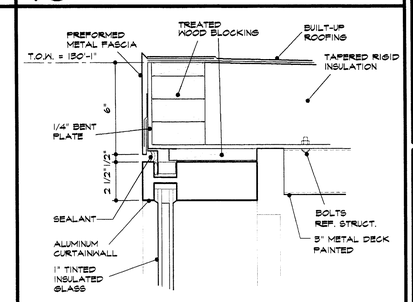

24 curtainwall head detail
3"=1'-0"

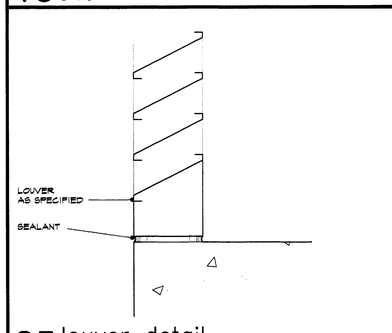

25 louver detail
3"=1'-0"

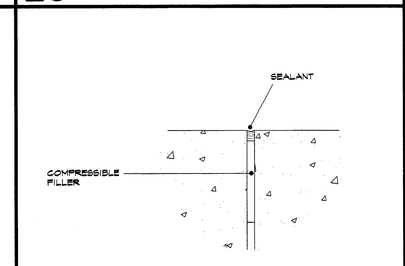

26 foundation detail
3"=1'-0"

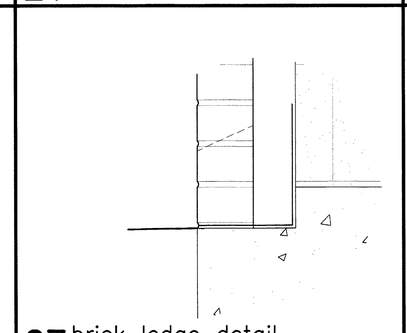

27 brick ledge detail
3"=1'-0"

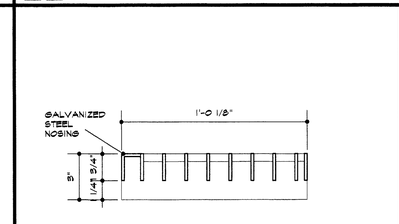

28 detail
3"=1'-0"

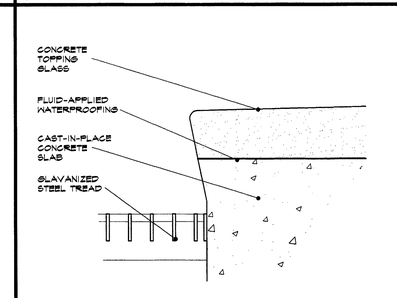

29 concrete detail
3"=1'-0"

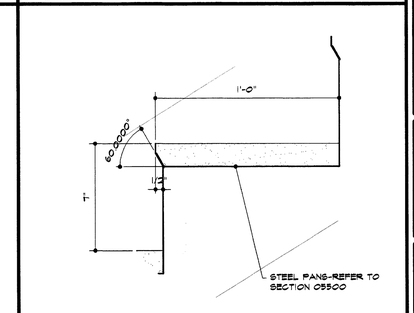

30 stair detail
3"=1'-0"

ISSUE DATE
FEB. 20, 2002

REVISIONS

ADDISON ATHLETIC CLUB EXPANSION AND LEISURE POOL
ADDISON, TEXAS

RON HOBBS ARCHITECTS
614 W. MAIN ST. SUITE #200 GARLAND, TEXAS 75040
(972) 494-0174 FAX (972) 494-0722

JOB NUMBER
0012

SHEET NAME
3" SCALE DETAILS

SHEET NUMBER
A901

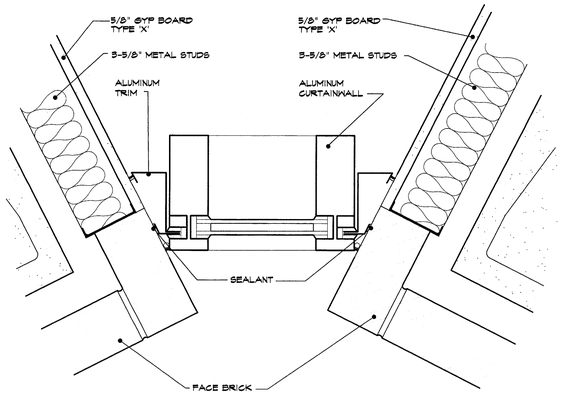

1 curtainwall jamb detail
3"=1'-0"

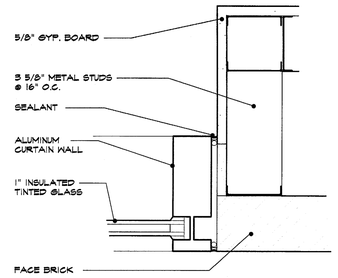

2 curtainwall detail
3"=1'-0"

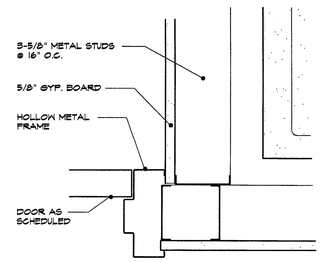

3 door jamb detail
3"=1'-0"

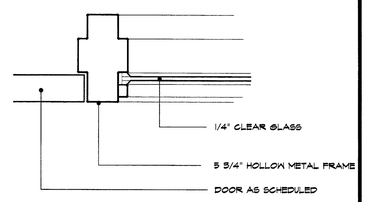

4 door jamb detail
3"=1'-0"

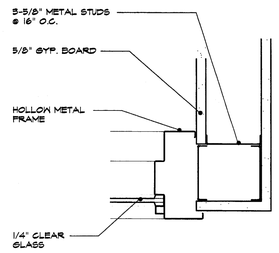

5 hollow metal jamb
3"=1'-0"

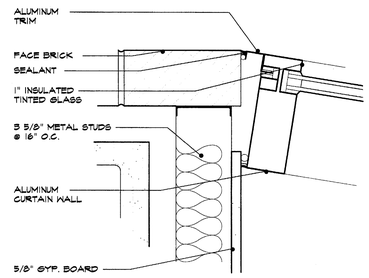

6 curtainwall jamb detail
3"=1'-0"

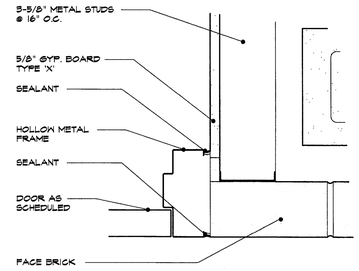

7 door jamb detail
3"=1'-0"

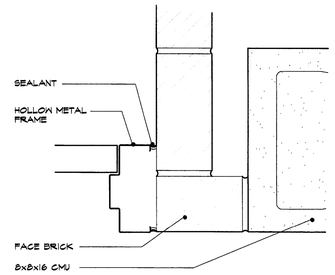

8 door jamb detail
3"=1'-0"

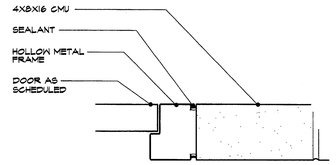

9 door jamb detail
3"=1'-0"

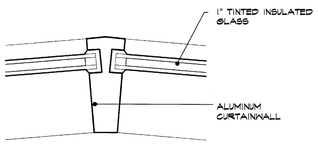

10 curtainwall detail
3"=1'-0"

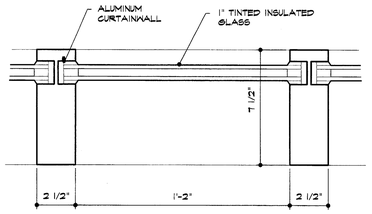

11 curtainwall detail
3"=1'-0"

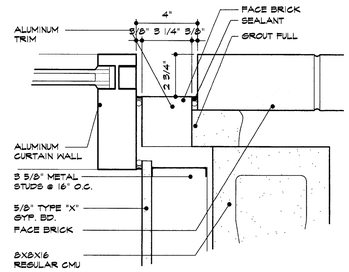

12 curtainwall detail
3"=1'-0"

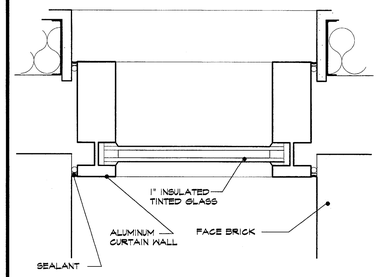

13 curtainwall detail
3"=1'-0"

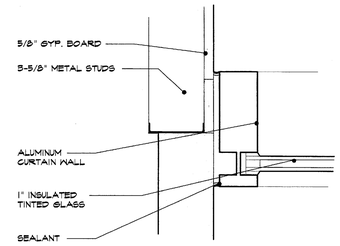

14 curtainwall detail
3"=1'-0"

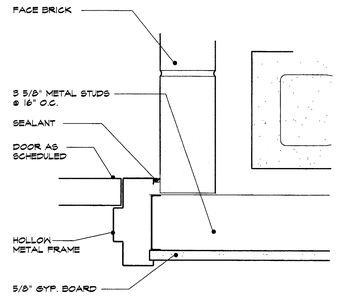

15 door jamb detail
3"=1'-0"

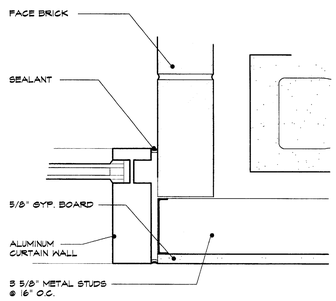

16 curtainwall detail
3"=1'-0"

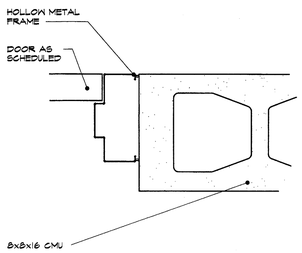

17 door jamb detail
3"=1'-0"

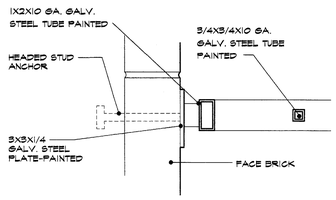

18 steel gate jamb detail
3"=1'-0"

plan view

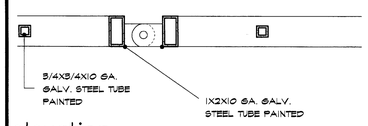

elevation

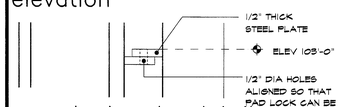

19 steel gate detail
3"=1'-0"

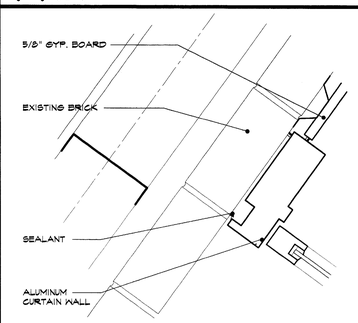

20 curtainwall detail
3"=1'-0"

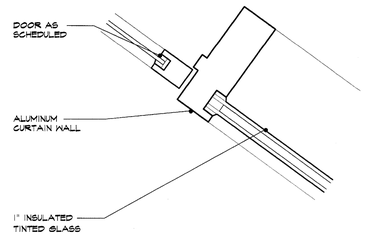

21 curtainwall detail
3"=1'-0"

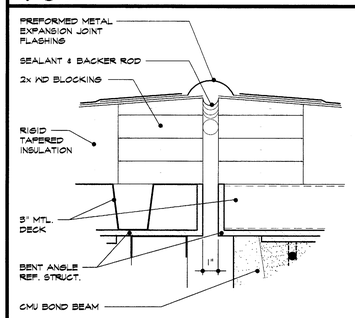

22 expansion joint detail
3"=1'-0"

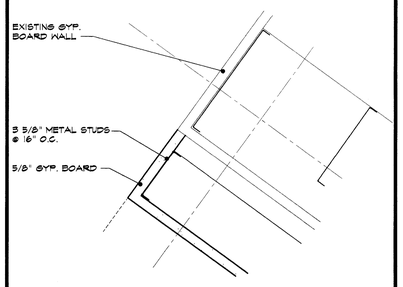

23 plan detail
3"=1'-0"

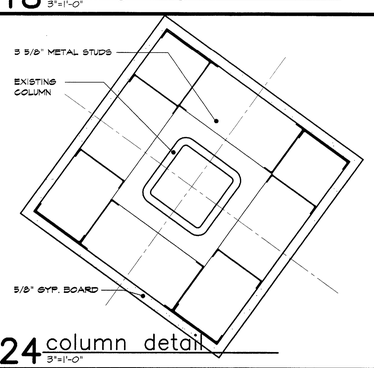

24 column detail
3"=1'-0"

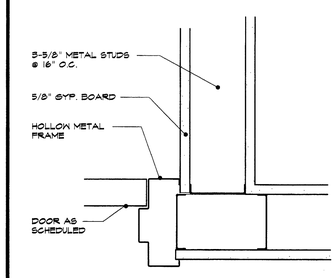

25 hollow metal jamb
3"=1'-0"

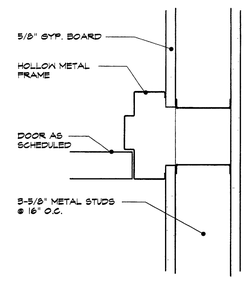

26 hollow metal jamb
3"=1'-0"

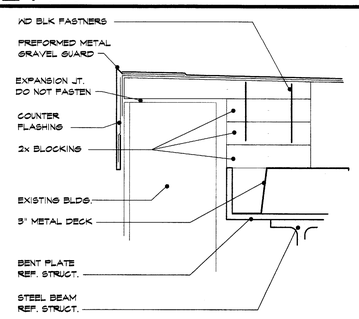

27 expansion joint detail
3"=1'-0"

ISSUE DATE
FEB. 20, 2002

REVISIONS

ADDISON ATHLETIC CLUB EXPANSION AND LEISURE POOL
ADDISON, TEXAS

RON HOBBS ARCHITECTS
614 W. MAIN ST. SUITE #200 GARLAND, TEXAS 75040
(972) 494-0174 FAX (972) 494-0722

JOB NUMBER
0012

SHEET NAME
3" SCALE DETAILS

SHEET NUMBER
A902

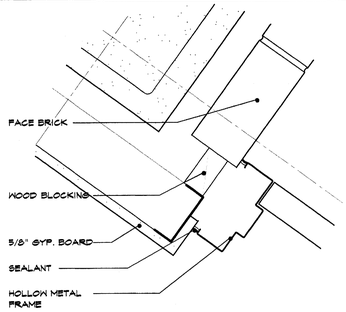

1 door jamb detail
3"=1'-0"

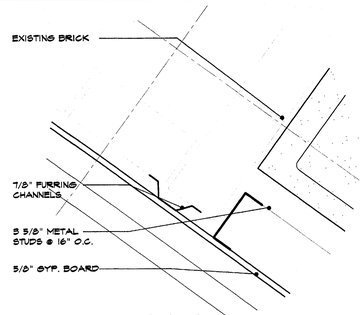

2 furring detail
3"=1'-0"

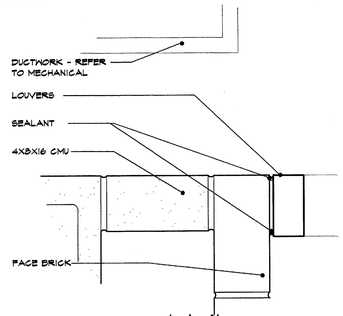

3 masonry detail
3"=1'-0"

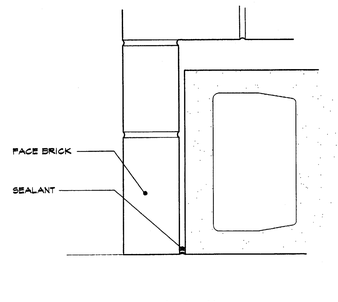

4 masonry detail
3"=1'-0"

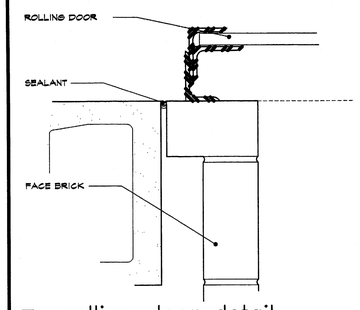

5 rolling door detail
3"=1'-0"

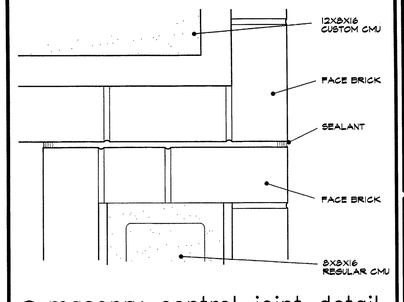

6 masonry control joint detail
3"=1'-0"

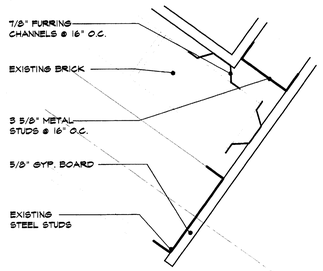

7 jamb detail
3"=1'-0"

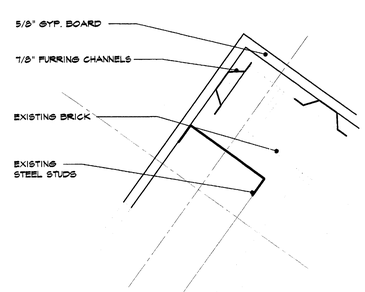

8 jamb detail
3"=1'-0"

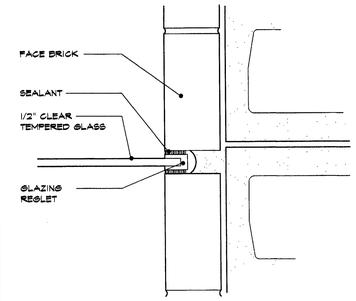

9 glass detail
3"=1'-0"

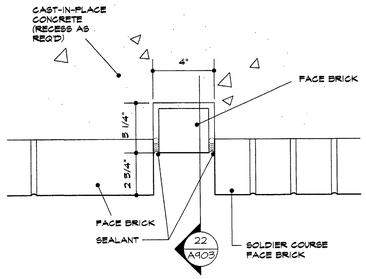

10 masonry detail
3"=1'-0"

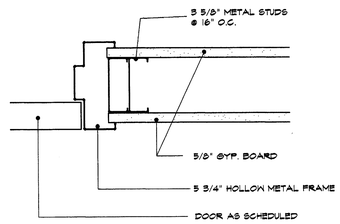

11 detail
3"=1'-0"

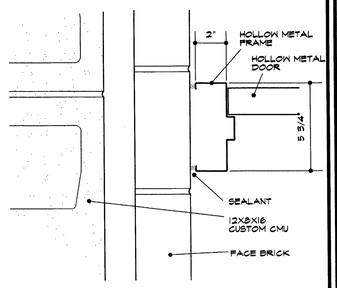

12 h.m. jamb detail
3"=1'-0"

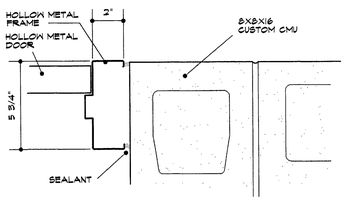

13 h.m. jamb detail
3"=1'-0"

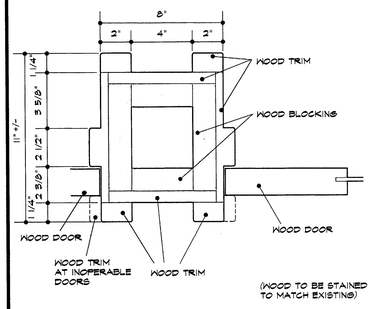

14 wood door jamb detail
3"=1'-0"

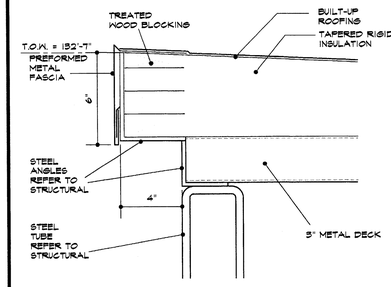

15 fascia detail—alt #4
3"=1'-0"

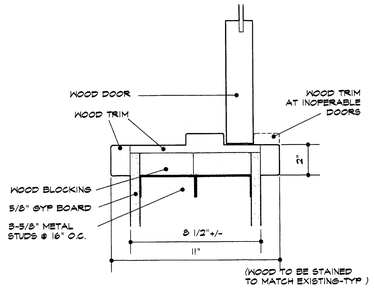

16 wood door jamb detail
3"=1'-0"

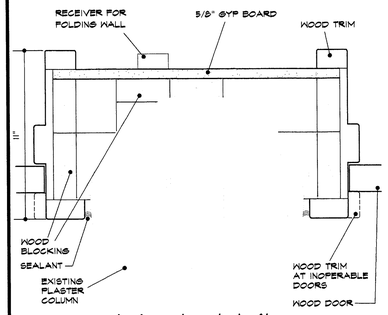

17 wood jamb detail
3"=1'-0"

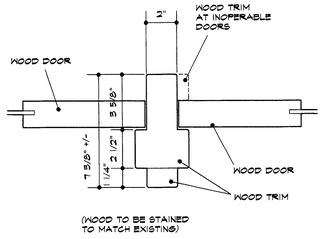

18 wood door jamb detail
3"=1'-0"

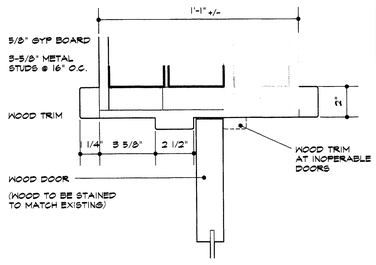

19 wood door head detail
3"=1'-0"

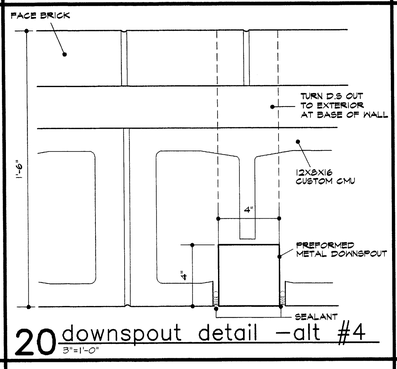

20 downspout detail —alt #4
3"=1'-0"

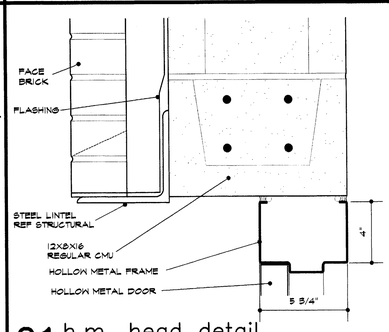

21 h.m. head detail
3"=1'-0"

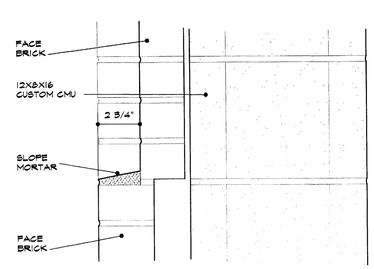

22 masonry detail
3"=1'-0"

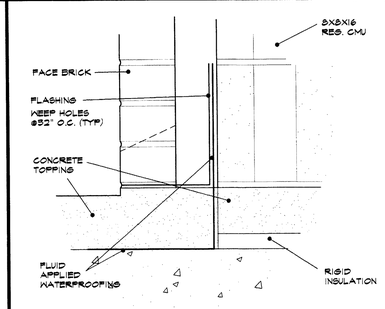

23 flashing detail
3"=1'-0"

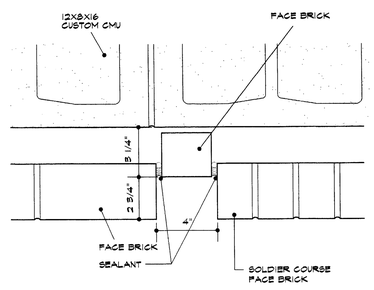

24 masonry detail
3"=1'-0"

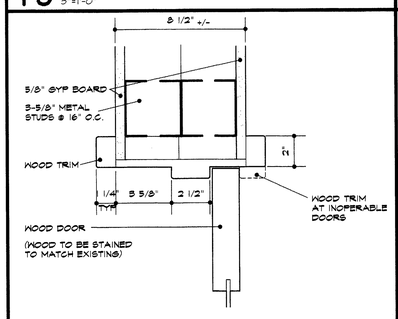

25 wood door head detail
3"=1'-0"

26 not used
3"=1'-0"

27 not used
3"=1'-0"

28 not used
3"=1'-0"

29 not used
3"=1'-0"

30 not used
3"=1'-0"

ISSUE DATE
FEB. 20, 2002

REVISIONS

ADDISON ATHLETIC CLUB EXPANSION AND LEISURE POOL
ADDISON, TEXAS

RON HOBBS ARCHITECTS
614 W. MAIN ST. SUITE #200 GARLAND, TEXAS 75040
(972) 494-0174 FAX (972) 494-0722

JOB NUMBER
0012

SHEET NAME
3" SCALE DETAILS

SHEET NUMBER
A903

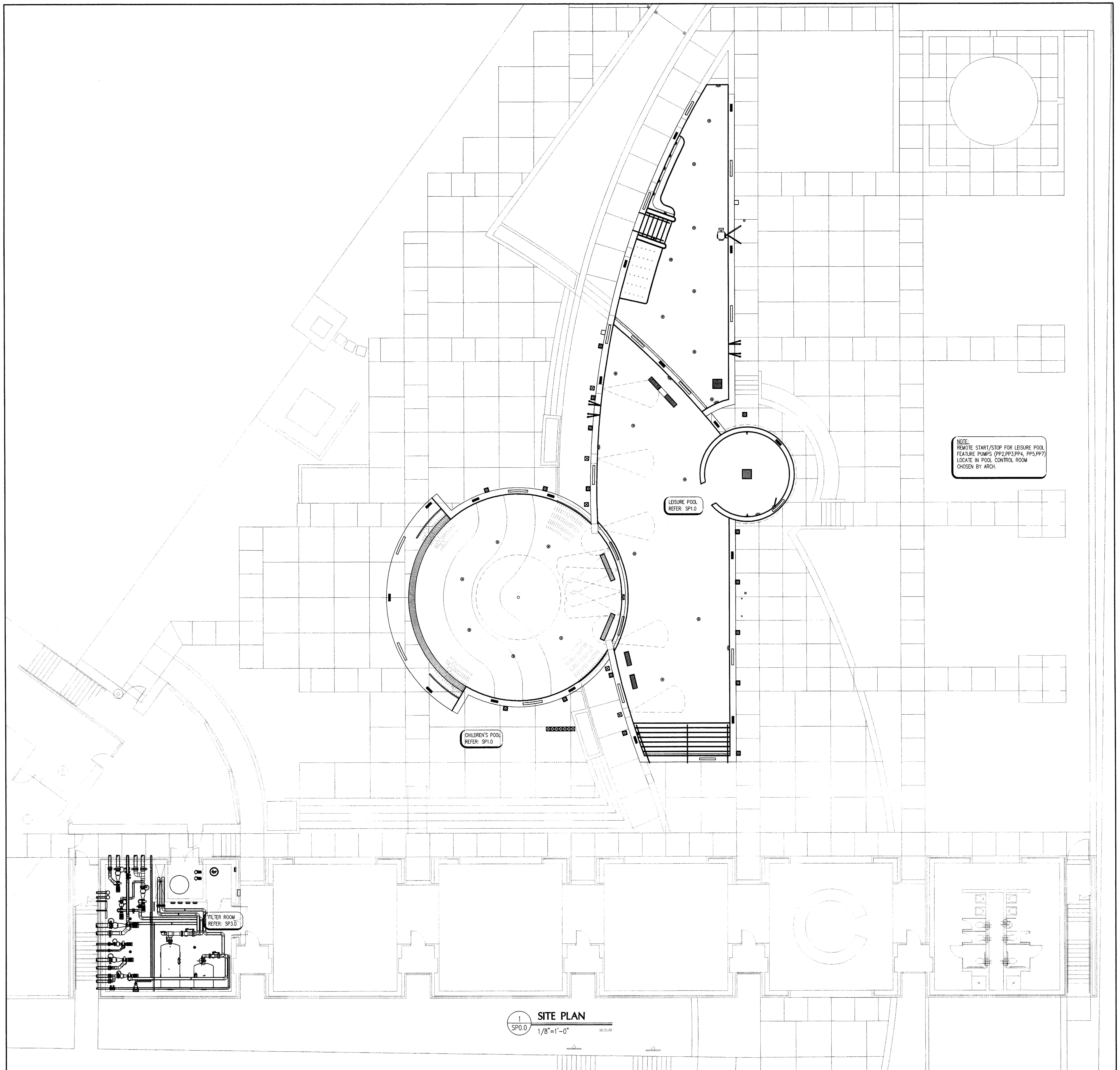

DESIGN DATA

	LEISURE POOL	CHILDRENS POOL
LENGTH	VARIES	VARIES
WIDTH	VARIES	VARIES
POOL WATER SURFACE AREA (SQ. FT.)	3,332 SQ. FT.	1,352 SQ. FT.
PERIMETER	N/A	N/A
VOLUME	87,238 GALLONS	7,585 GALLONS
BATHER LOAD	278 PERSONS	113 PERSONS
CIRCULATION SYSTEM & FILTERS		
FILTER TYPE, HORIZONTAL FIBERGLASS	HIGH RATE SAND	HIGH RATE SAND
POOL TURNOVER	2 HRS	30 MINUTES
RECIRCULATION RATE	727 GPM	253 GPM
FILTRATION RATE (DESIGN MAX.)	13.0 GPM/S.F.	13.0 GPM/S.F.
FILTER AREA (REQUIRED)	55.9 S.F.	19.4 S.F.
FILTER AREA (ACTUAL)	63.4 S.F.	19.7 S.F.
FILTRATION RATE (ACTUAL)	11.5 GPM/S.F.	12.8 GPM/S.F.
BACKWASH RATE (ACTUAL)	15.0 GPM/S.F.	15.0 GPM/S.F.
BACKWASH FLOW RATE (ACTUAL)	476 GPM	253 GPM
SEWER CAPACITY (REQUIRED)	476 GPM	253 GPM

ISSUE DATE
FEB. 20, 2002

REVISIONS

ADDISON ATHLETIC CLUB EXPANSION
AND
LEISURE POOL
ADDISON, TEXAS

RON HOBBS ARCHITECTS
614 W. MAIN ST. SUITE #200 GARLAND, TEXAS 75040
(972) 494-0174 FAX (972) 494-0722

COUNSILMAN/HUNSAKER & ASSOC.

STATE OF TEXAS
DALE RICHARD DeCLUE
84429
LICENSED
PROFESSIONAL ENGINEER

JOB NUMBER
0012

SHEET NUMBER
SP0.0
100% CD's

© 2002 Counsilman/Hunsaker & Associates, Inc.

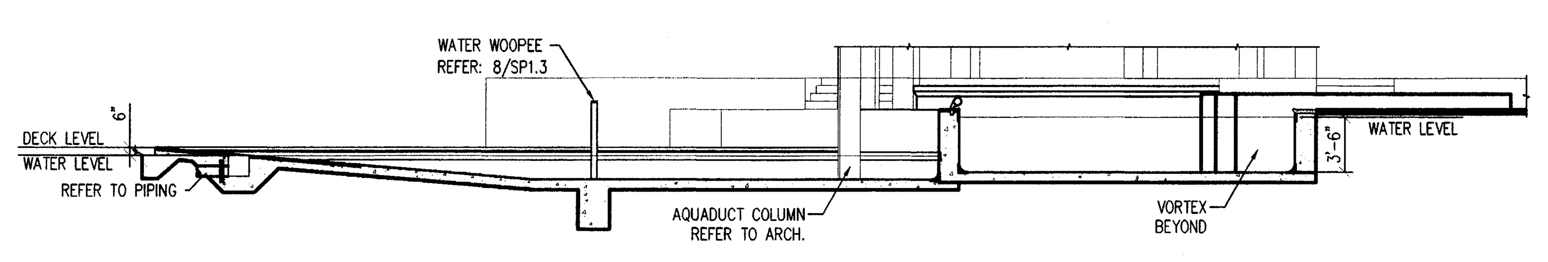

3 SP1.0 LEISURE POOL CROSS SECTION
1/8"=1'-0"

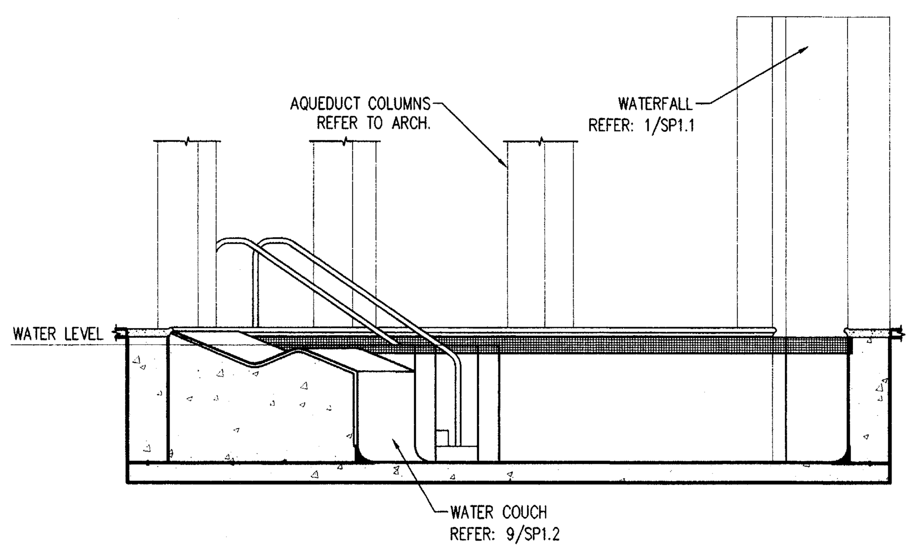

4 SP1.0 LEISURE POOL CROSS SECTION
1/4"=1'-0"

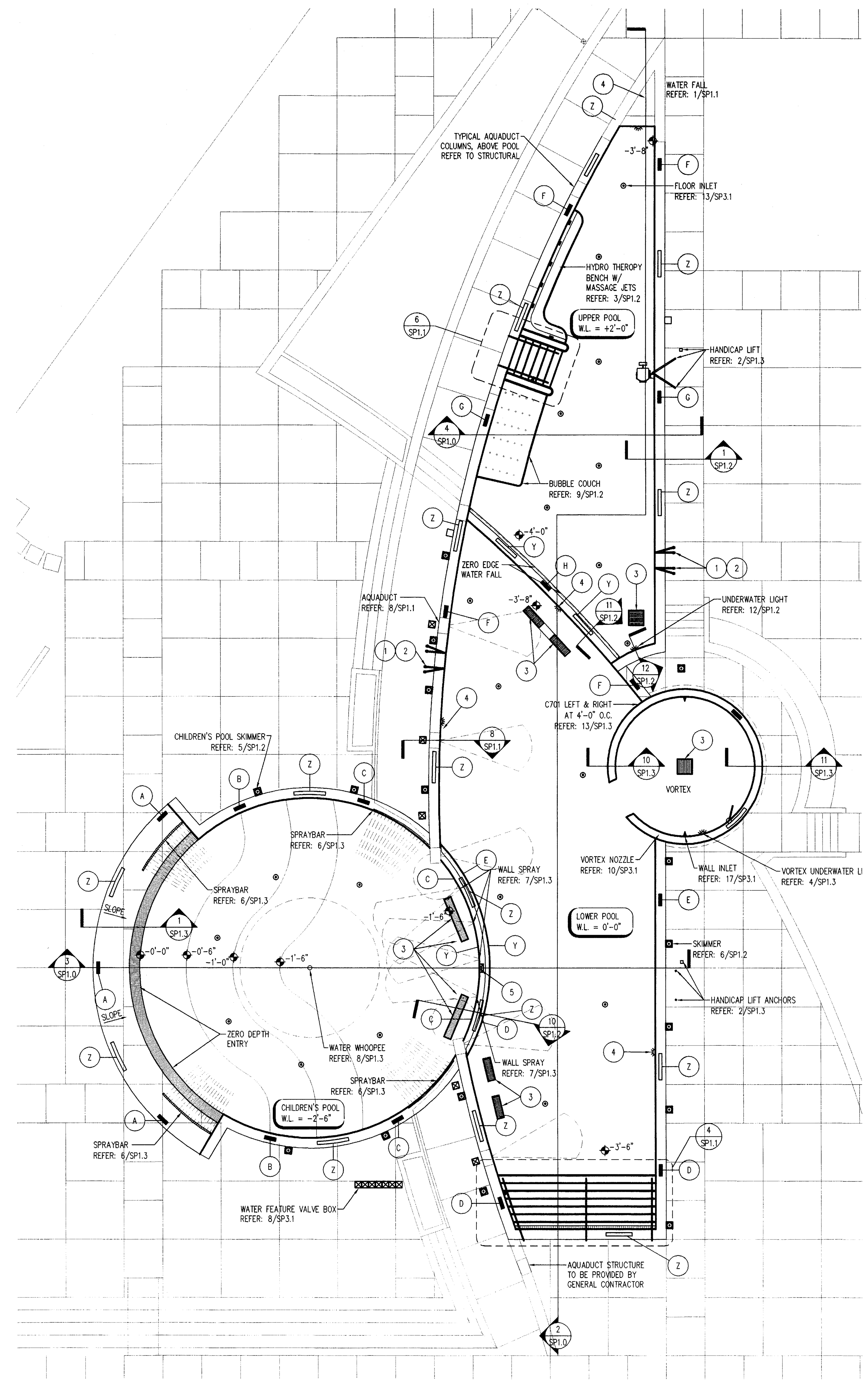

1 SP1.0 LEISURE POOL PLAN
1/8"=1'-0"

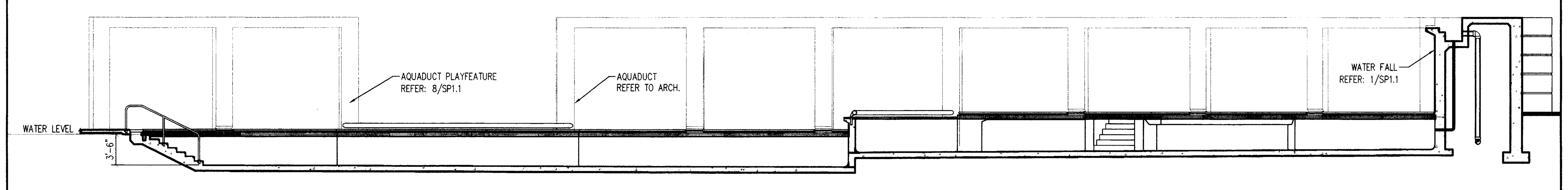

2 SP1.0 LEISURE POOL LONGITUDINAL SECTION
1/8"=1'-0"

EQUIPMENT SCHEDULE

LEGEND	ID	ITEM
	1	GRAB RAIL REFER: 7/SP1.2
	2	WEDGE ANCHORS & ESCUTCHEON PLATE REFER: 3/SP1.3
	3	MAIN DRAIN FRAME & GRATE REFER: 6/SP3.1
	4	UNDERWATER LIGHT REFER: 2/SP1.2 & 12/SP1.2

LEGEND

- ▲ WALL INLET
- • FLOOR INLET
- MAIN DRAIN BOX
- ⊠ VALVE BOX, 14"x14" DIAMOND TREAD HINGED BRASS FRAME ZURN Z-1461 WITH VANDAL PROOF SLIP RESISTANT DECK COVER WHERE SHOWN

GENERAL NOTES

POOL FINISH:	MARCITE PLASTER WITH A 12" CERAMIC TILE BAND BELOW BRUSHED CONCRETE COPING WITH TILE DEPTH MARKINGS AND WARNING SIGNS. TILED ZERO ENTRY TO 6" WATER DEPTH ON CHILDREN'S POOL. UNDERWATER BENCH, BUBBLE COUCH AND STAIRS ARE ALL TILE FINISH.
WATER DEPTH:	WATER DEPTH FOR POOL ⌖ IS FROM WATER LEVEL ELEVATION (LEISURE POOL).
WATER LEVEL:	WATER ELEVATIONS ARE INDICATED ON EACH RESPECTIVE POOL AS W.L. = X'-X". WITH THE "LOWER POOL" INDICATED AS W.L. = 0'-0". REFER TO ARCH. FOR RELATIVE DECK LEVELS.
DIMENSION:	TYPICAL DIMENSION SHOWN ARE FROM INSIDE FINISHED POOL WALL
COVE:	THE JUNCTION BETWEEN THE SWIMMING POOL WALL AND THE FLOOR SHALL BE COVED WITH A 3" MAXIMUM RADIUS. REFER: 14/SP1.3
DEPTH MARKERS:	DIMENSION SHOWN ARE FOR BOTH DECK AND FACE MARKINGS SIGNAGE.
DECK MARKINGS:	SHALL BE SLIP-RESISTANT TILE
PROPRIETARY NAMES:	ALL PROPIETARY NAMES ARE TO DESIGNATE PERFORMANCE STANDARDS. APPROVED EQUAL WILL BE ACCEPTED.

DEPTH MARKER SCHEDULE

ID	SIGNAGE
A	0'-0"
B	0'-6"
C	1'-6"
D	3'-6"
E	3'-7"
F	3'-8"
G	3'-10"
H	4'-0"
Y	NO CLIMBING
Z	DO NOT DIVE

ISSUE DATE
FEB. 20, 2002
REVISIONS

ADDISON ATHLETIC CLUB EXPANSION AND LEISURE POOL
ADDISON, TEXAS

RON HOBBS ARCHITECTS
614 W. MAIN ST. SUITE #200 GARLAND, TEXAS 75040
(972) 494-0174 FAX (972) 494-0722

COUNSILMAN/HUNSAKER & ASSOC.

STATE OF TEXAS
DALE RICHARD DeCLUE
84429
LICENSED PROFESSIONAL ENGINEER

JOB NUMBER
0012

SHEET NUMBER
SP1.0
100% CD's

© 2002 Counsilman/Hunsaker & Associates, Inc.

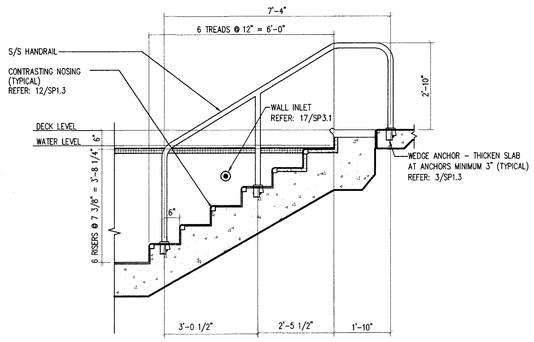

7 SP1.1 **UPPER POOL STAIR SECTION**
1/2" = 1'-0"

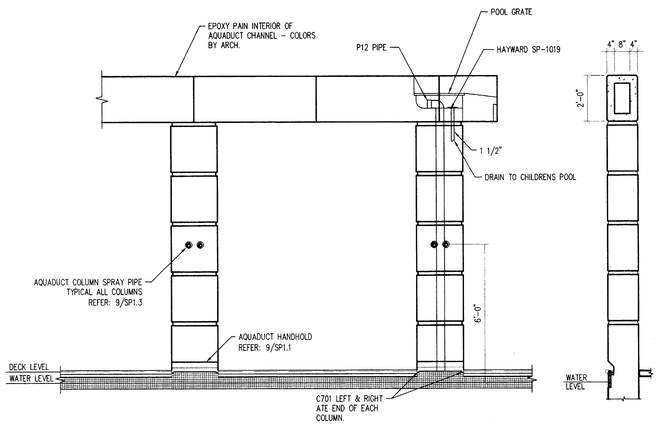

8 SP1.1 **AQUADUCT DETAIL**
3/8" = 1'-0"

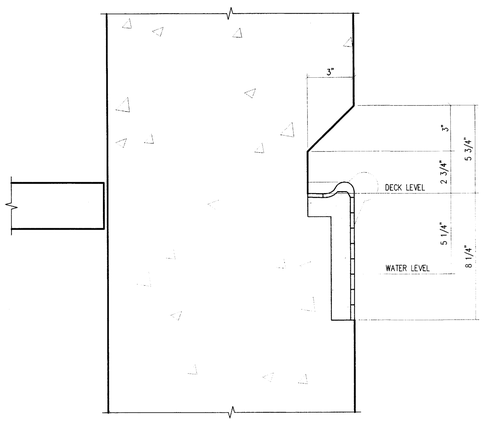

8 SP1.1 **AQUADUCT HANDHOLD DETAIL**
3" = 1'-0"

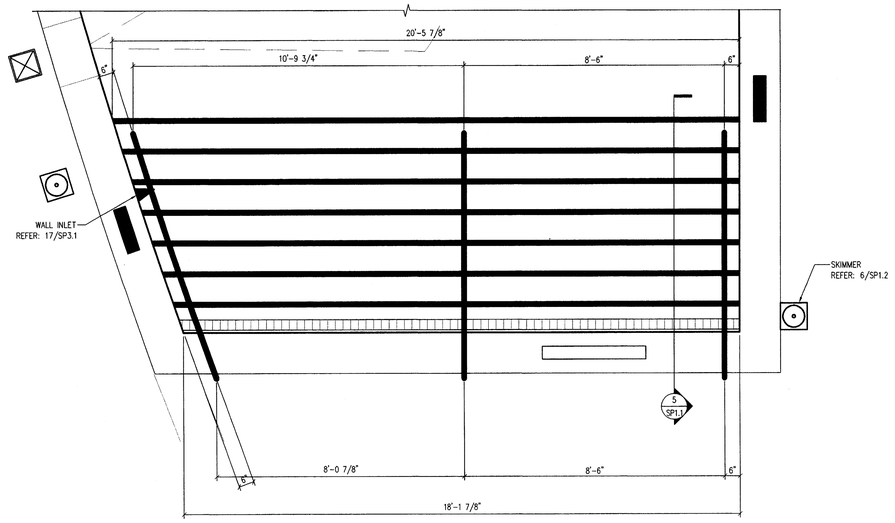

4 SP1.1 **ENLARGED STAIR PLAN**
1/2" = 1'-0"

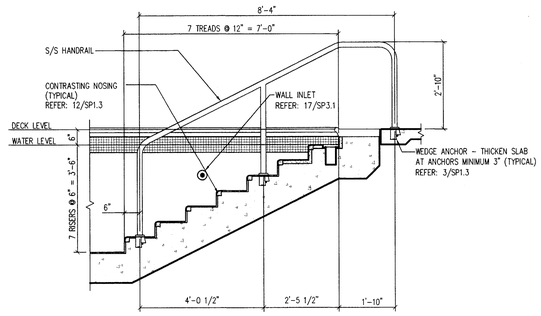

5 SP1.1 **STAIR SECTION**
1/2" = 1'-0"

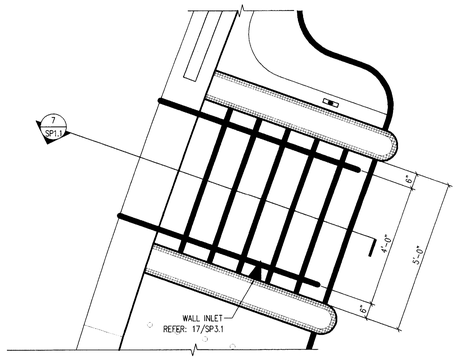

6 SP1.1 **ENLARGED STAIR PLAN**
1/2" = 1'-0"

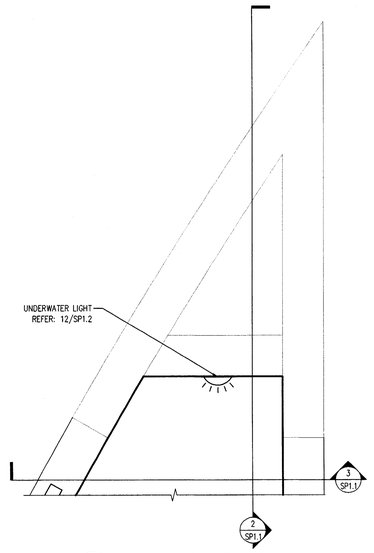

1 SP1.1 **WATERFALL PLAN**
1/2" = 1'-0"

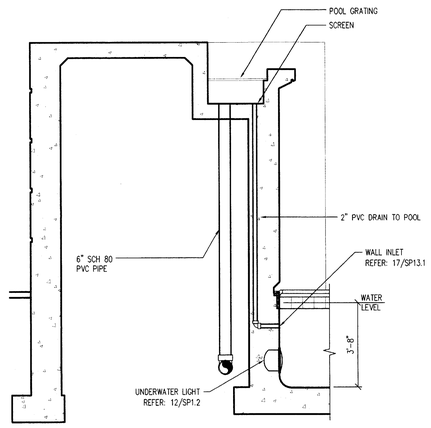

2 SP1.1 **WATERFALL SECTION**
3/8" = 1'-0"

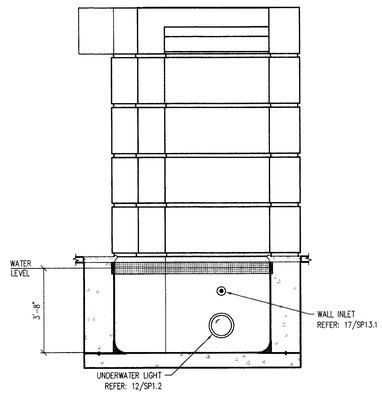

3 SP1.1 **WATERFALL ELEVATION**
1/2" = 1'-0"

ISSUE DATE
FEB. 20, 2002

REVISIONS

ADDISON ATHLETIC CLUB EXPANSION AND LEISURE POOL
ADDISON, TEXAS

RON HOBBS ARCHITECTS
614 W. MAIN ST. SUITE 4200 GARLAND, TEXAS 75040
(972) 494-0174 FAX (972) 494-0722

COUNSELMAN/HUNSAKER & ASSOC.
MECHANICAL ELECTRICAL PLUMBING
PHONE 469-499-1000 FAX 469-499-0000

STATE OF TEXAS
DALE RICHARD DVOJAC
84429
LICENSED
PROFESSIONAL ENGINEER

JOB NUMBER
0012

SHEET NUMBER
SP1.1
100% CD's

© 2002 Counsilman/Hunsaker & Associates, Inc.

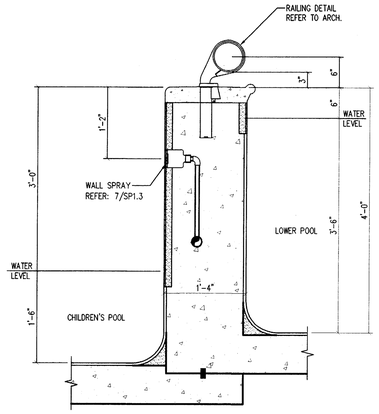

10 SP1.2 **LEISURE POOL WALL SECTION**
1" = 1'-0"

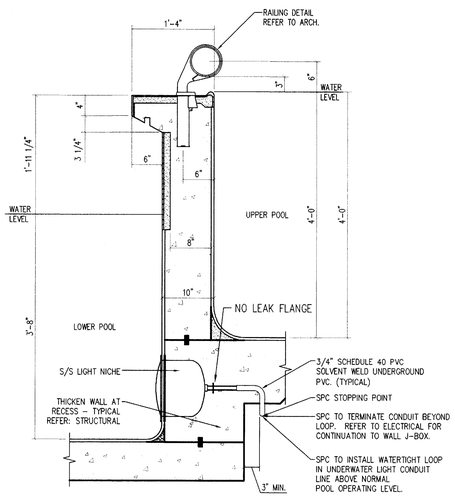

11 SP1.2 **LEISURE POOL WEIR WALL SECTION**
1" = 1'-0"

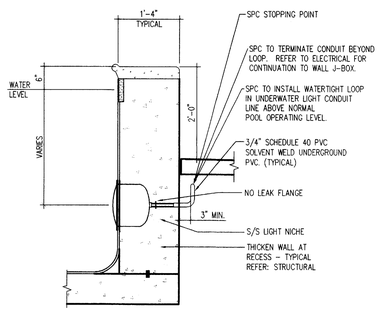

12 SP1.2 **UNDERWATER LIGHT DETAIL**
3/4" = 1'-0"

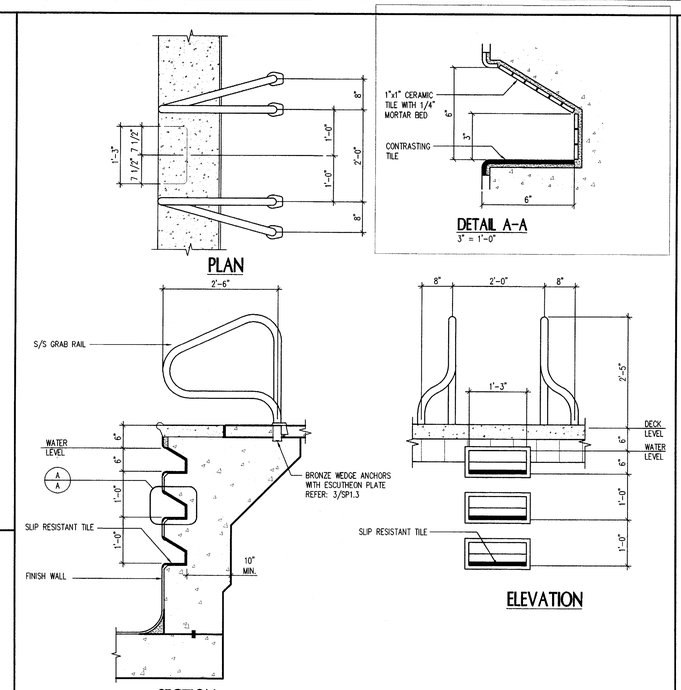

7 SP1.2 **GRAB RAILS AND RECESSED STEPS**
3/4" = 1'-0"

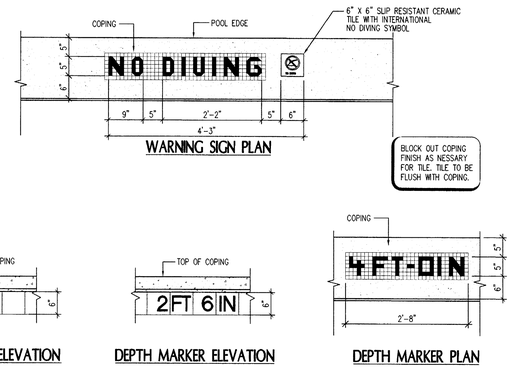

8 SP1.2 **DEPTH MARKERS & WARNING SIGNS**
3/4" = 1'-0"

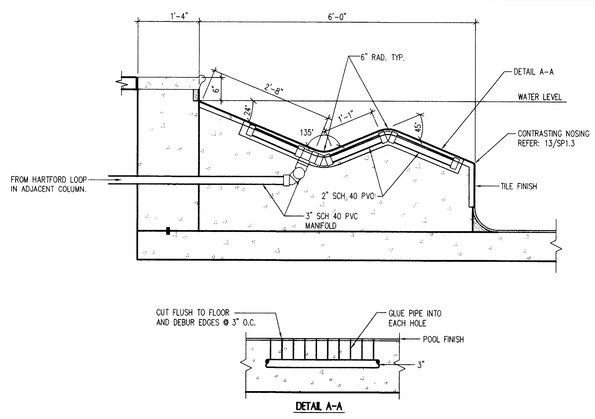

9 SP1.2 **BUBBLE COUCH**
3/4" = 1'-0"

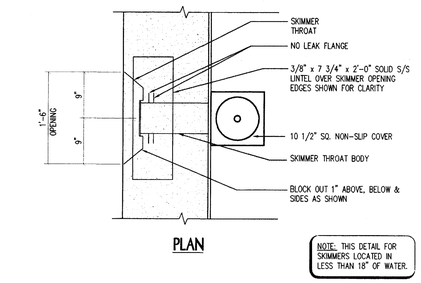

5 SP1.2 **CHILDREN'S SKIMMER DETAIL**
1" = 1'-0"

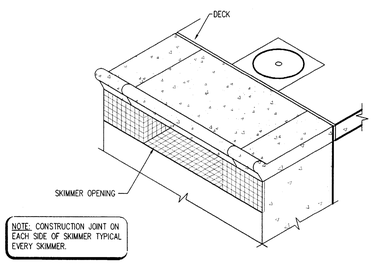

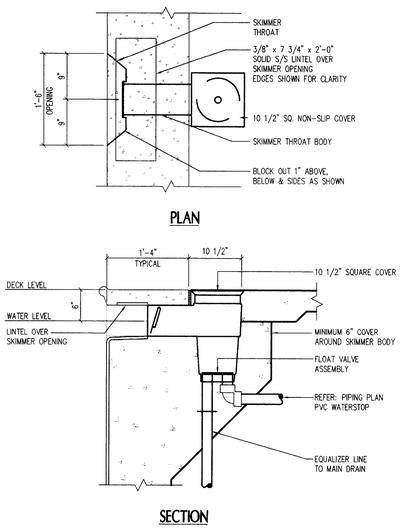

6 SP1.2 **SKIMMER DETAIL**
1" = 1'-0"

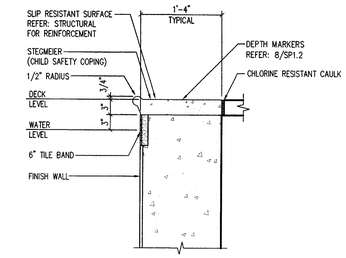

1 SP1.2 **LEISURE POOL WALL SECTION**
1" = 1'-0"

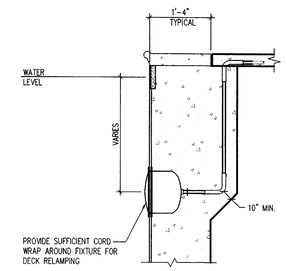

2 SP1.2 **UNDERWATER LIGHT DETAIL**
3/4" = 1'-0"

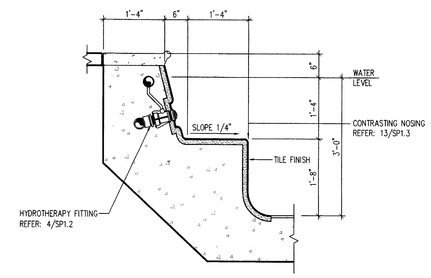

3 SP1.2 **UNDERWATER BENCH**
3/4" = 1'-0"

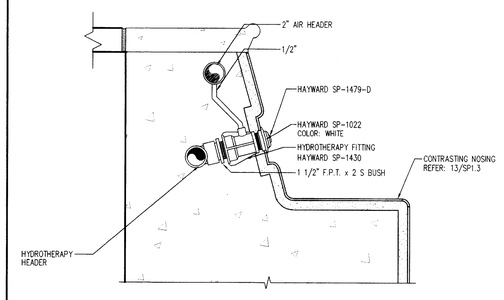

4 SP1.2 **HYDROTHERAPY FITTING**
3/4" = 1'-0"

ISSUE DATE
FEB. 20, 2002

REVISIONS

ADDISON ATHLETIC CLUB EXPANSION AND LEISURE POOL
ADDISON, TEXAS

RON HOBBS ARCHITECTS
614 W. MAIN ST. SUITE #200 GARLAND, TEXAS 75040
(972) 494-0174 FAX (972) 494-0722

COUNSELMAN/HUNSAKER & ASSOC.
PLANNING, DESIGN, INC. CO.OP. INC. AND
PROJECT MANAGEMENT - TEL 972-494-9000

STATE OF TEXAS
DALE RICHARD DUCLUE
94429
LICENSED
PROFESSIONAL ENGINEER

JOB NUMBER
0012

SHEET NUMBER
SP1.2
100% CD's

© 2002 Counselman/Hunsaker & Associates, Inc.

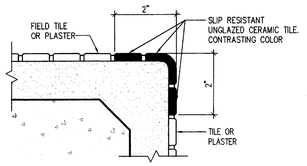

12 / SP1.3 **CONTRASTING NOSING TILE**
6" = 1'-0"
08/21/01

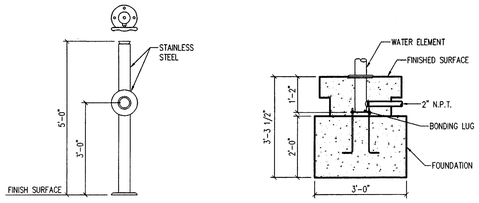

8 / SP1.3 **WATER WOOPEE -C WITH HAND WHEEL (SPECIAL)**
1/2" = 1'-0"
08/21/01

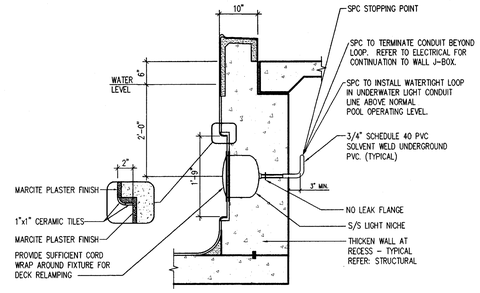

4 / SP1.3 **VORTEX UNDERWATER LIGHT**
3/4" = 1'-0"
01/28/02

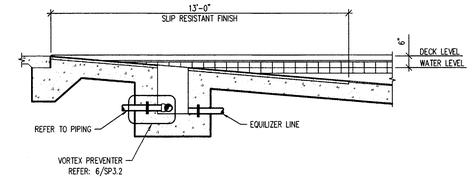

1 / SP1.3 **ZERO BEACH ENTRY DETAIL**
3/8" = 1'-0"
08/21/01

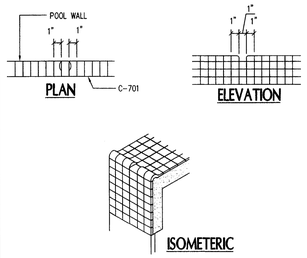

13 / SP1.3 **NOSING TILE DETAIL**
1 1/2" = 1'-0"
08/21/01

NOTE:
REFER TO 8/SP1.1 FOR HEIGHT OF COLUMN PIPE SPRAY

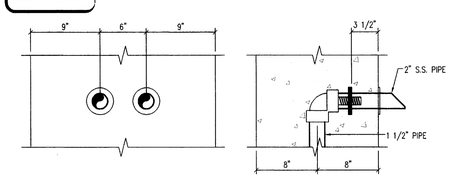

9 / SP1.3 **COLUMN PIPE SPRAY DETAIL**
1 1/2" = 1'-0"
02/08/02

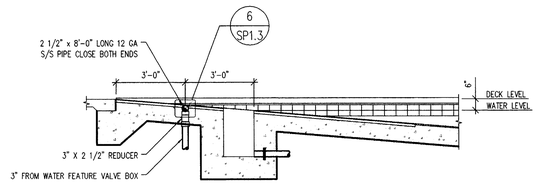

5 / SP1.3 **SPRAYBAR DETAIL**
3/8" = 1'-0"
08/21/01

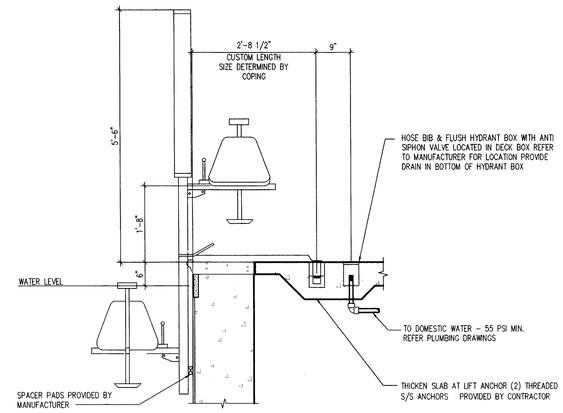

NOTE:
ALL INSIDE CORNERS OF POOLS SHALL BE COVED. COVE SHALL TAPER UP TO BOTTOM OF GUTTER

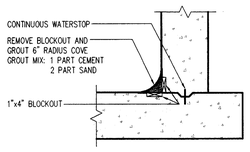

14 / SP1.3 **COVE DETAIL**
3/4" = 1'-0"
01/29/02

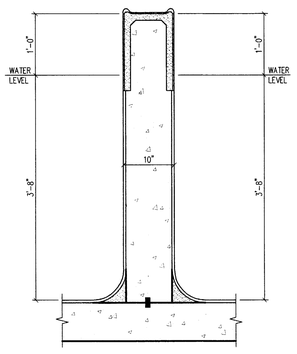

10 / SP1.3 **VORTEX WALL DETAIL**
1" = 1'-0"
01/30/02

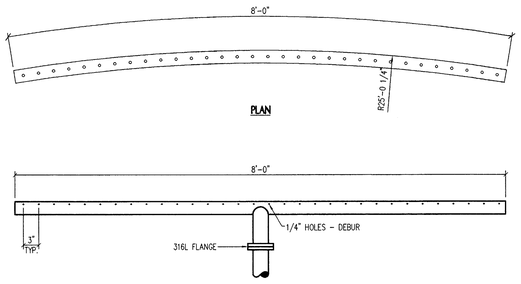

NOTE:
ALL 316L STEEL WELD WITH LOW CARBON ROD.

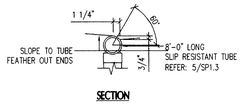

NOTE:
PROVIDE BONDING LUG PER NEC 680

6 / SP1.3 **SPRAYBAR SECTION**
1" = 1'-0"
08/21/01

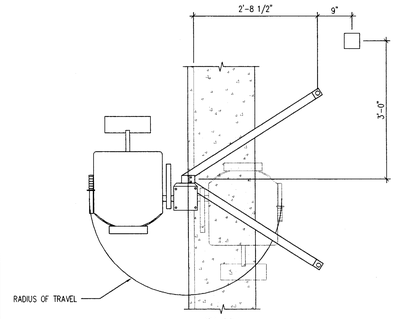

2 / SP1.3 **HANDICAP LIFT**
3/4" = 1'-0"
08/21/01

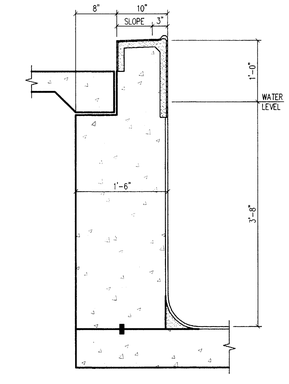

11 / SP1.3 **VORTEX/DECK CONFIGURATION**
1" = 1'-0"
01/30/02

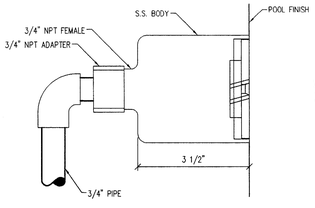

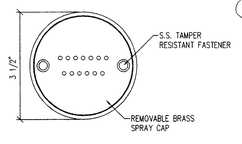

NOTE:
REFER TO 10/SP1.2 FOR LOCATION

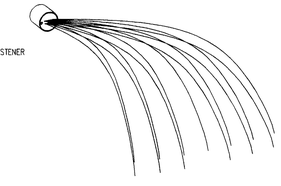

7 / SP1.3 **WALL SPRAY**
6" = 1'-0"
08/21/01

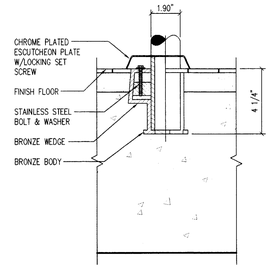

3 / SP1.3 **WEDGE ANCHOR & ESCUTCHEON PLATE**
3" = 1'-0"
08/21/01

ISSUE DATE
FEB. 20, 2002

REVISIONS

ADDISON ATHLETIC CLUB EXPANSION AND LEISURE POOL
ADDISON, TEXAS

RON HOBBS ARCHITECTS
614 W. MAIN ST. SUITE #200 GARLAND, TEXAS 75040
(972) 494-0174 FAX (972) 494-0722

COUNSILMAN/HUNSAKER & ASSOC.
2700 MARIO MARIS, SUITE 200
PLANO, TEXAS 75075
PHONE (972) 931-2187 FAX (972) 931-2189

STATE OF TEXAS
DALE RICHARD DUCLOS
LICENSED
64429
PROFESSIONAL ENGINEER

JOB NUMBER
0012

SHEET NUMBER
SP1.3
100% CD's

© 2002 Counsilman/Hunsaker & Associates, Inc.

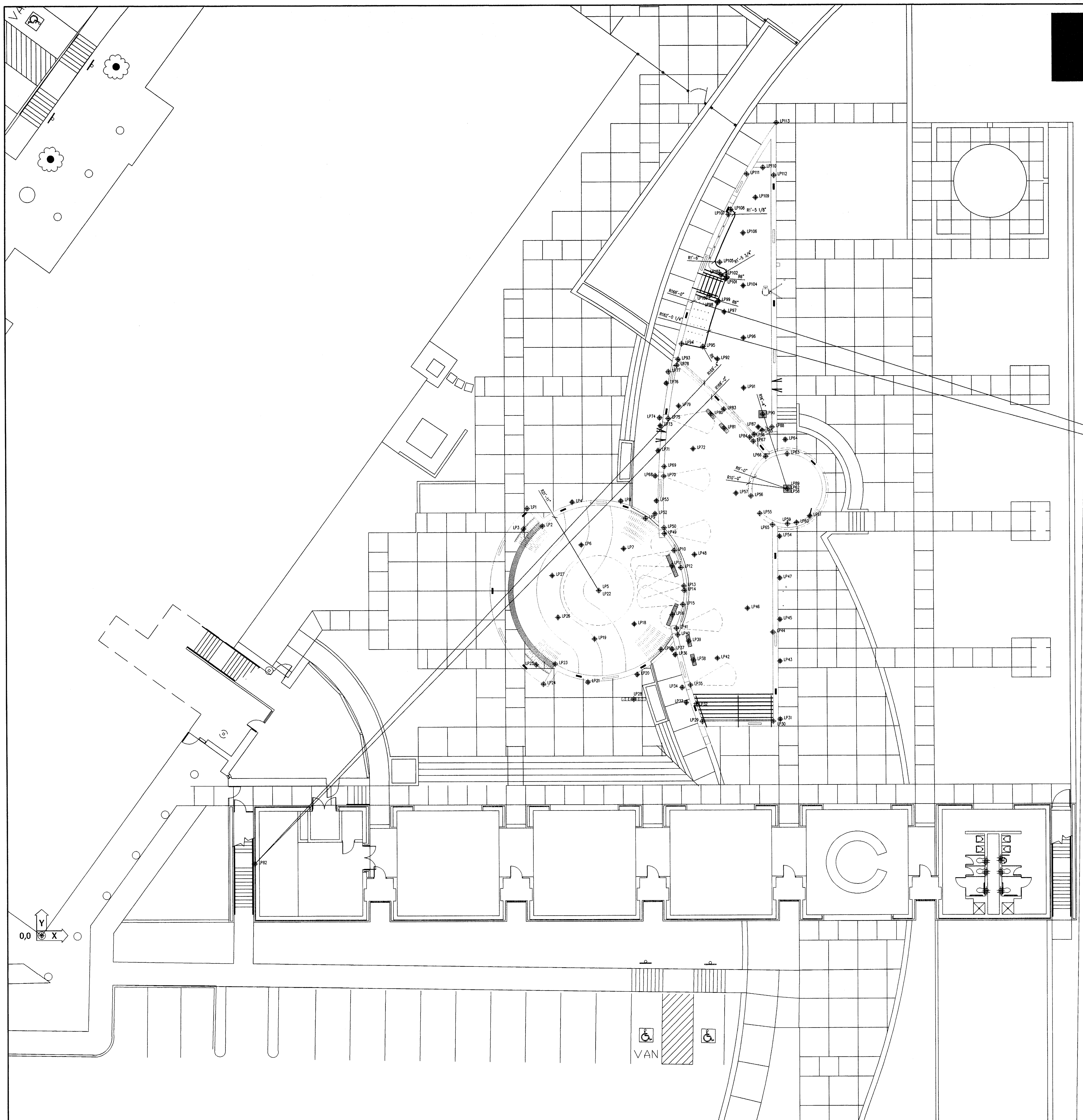

LOCATION POINT SCHEDULE

LP#	X	Y	DESCRIPTION
1	125'-0"	109'-4 3/4"	CONSTRUCTION POINT
2	128'-11 1/4"	104'-10 1/4"	CONSTRUCTION POINT
3	124'-0 3/4"	104'-1 3/4"	SPRAY BAR
4	136'-7"	111'-0 1/4"	SKIMMER
5	143'-3 1/2"	88'-3 3/4"	CENTER OF RADIUS
6	138'-10 3/4"	100'-0 1/4"	FLOOR INLET
7	149'-8 1/2"	99'-0 1/2"	FLOOR INLET
8	149'-0 1/4"	111'-3 1/2"	SKIMMER
9	155'-3 1/4"	106'-9 1/4"	SPRAYBAR
10	162'-8"	98'-6 1/2"	WALL SPRAY
11	162'-1 3/4"	94'-7"	CENTER OF MAIN DRAIN
12	164'-4 3/4"	94'-1 3/4"	WALL SPRAY
13	165'-2"	89'-5 1/4"	WALL SPRAY
14	165'-2 1/2"	88'-3 3/4"	RECESSED UNDERWATER LIGHT
15	164'-10 3/4"	84'-7 3/4"	WALL SPRAY
16	162'-1 3/4"	82'-0 1/4"	CENTER OF MAIN DRAIN
17	159'-2 1/4"	73'-0 3/4"	SPRAY BAR
18	152'-4"	79'-7 3/4"	FLOOR INLET
19	142'-2"	75'-10"	FLOOR INLET
20	153'-0 1/4"	66'-8 1/2"	SKIMMER
21	140'-5 1/4"	64'-9 1/2"	SKIMMER
22	143'-3 1/2"	88'-3 3/4"	WATTER WOOPEE
23	132'-1 1/4"	69'-5 1/2"	CONSTRUCTION POINT
24	129'-0 3/4"	64'-3 1/2"	CONSTRUCTION POINT
25	127'-2 1/4"	69'-3 1/2"	SPRAY BAR
26	132'-10"	81'-5"	FLOOR INLET
27	131'-4 1/2"	92'-2"	FLOOR INLET
28	152'-1 1/2"	60'-4 1/4"	CENTER OF PLAY FEATURES VALVE BOX
29	169'-9 1/2"	54'-7 1/2"	CONSTRUCTION POINT
30	187'-11 1/2"	54'-7 1/2"	CONSTRUCTION POINT
31	189'-8 3/4"	55'-1 1/2"	SKIMMER
32	168'-3"	59'-1 1/2"	WALL INLET
33	165'-8"	59'-5 3/4"	SKIMMER
34	164'-7 1/2"	63'-4 1/4"	AQUEDUCT VALVE BOX
35	166'-9"	63'-11 3/4"	COLUMN PIPE SPRAY
36	162'-10 1/4"	71'-9 1/4"	SKIMMER
37	162'-0 3/4"	73'-2"	AQUEDUCT VALVE BOX
38	167'-6 3/4"	70'-4 3/4"	CENTER OF MAIN DRAIN
39	166'-4 1/2"	75'-3"	CENTER OF MAIN DRAIN
40	163'-6 1/4"	76'-10 1/4"	CONSTRUCTIONPOINT
41	163'-2 1/4"	78'-6 1/2"	COLUMN PIPE SPRAY
42	173'-8 1/4"	70'-10"	FLOOR INLET
43	189'-8 3/4"	70'-0 3/4"	SKIMMER
44	187'-11 1/2"	77'-5 3/4"	UNDERWATER LIGHT
45	189'-8 3/4"	80'-9"	SKIMMER
46	181'-5 1/2"	83'-7 1/2"	FLOOR INLET
47	189'-8 3/4"	91'-5 1/4"	SKIMMER
48	167'-10 3/4"	97'-5 3/4"	FLOOR INLET
49	160'-2"	102'-10 1/2"	COLUMN PIPE SPRAY
50	160'-1 1/4"	104'-4 1/4"	CONSTRUCTION POINT
51	327'-11 1/2"	111'-3 1/2"	CENTER OF RADIUS
52	157'-9 1/4"	107'-11 1/2"	AQUEDUCT VALVE BOX
53	158'-2 1/4"	111'-3 1/2"	SKIMMER
54	189'-8 3/4"	102'-1 1/2"	SKIMMER
55	184'-8 1/4"	108'-0"	CONSTRUCTION PIONT
56	182'-5 1/2"	112'-5 3/4"	CONSTRUCTION PIONT
57	178'-7 1/4"	113'-2 1/2"	FLOOR INLET

LP#	X	Y	DESCRIPTION
58	191'-9 1/2"	114'-3 1/2"	CENTER OF VORTEX
59	191'-9 1/2"	105'-3 1/2"	WALL INLET
60	194'-1 1/4"	105'-7 1/4"	UNDERWATER LIGHT
61	197'-5 3/4"	107'-4"	VORTEX NOZZLE
62	191'-9 1/2"	114'-3 1/2"	CENTER OF MAIN DRAIN
63	191'-9 1/2"	123'-3 1/2"	WALL INLET
64	191'-4 1/4"	126'-11 1/2"	VALVE BOX
65	187'-11 1/2"	105'-0 3/4"	CONSTRUCTION POINT
66	186'-3 1/4"	122'-7 3/4"	CONSTRUCTION POINT
67	183'-1 1/4"	126'-6 1/2"	CONSTRUCTION POINT
68	157'-10 1/2"	117'-8 1/2"	AQUEDUCT VALVE BOX
69	160'-2 1/4"	120'-1"	UNDERWATER LIGHT
70	160'-0 3/4"	117'-7 1/2"	COLUMN PIPE SPRAY
71	158'-8"	124'-2"	SKIMMER
72	167'-8 1/4"	124'-7 1/2"	FLOOR INLET
73	159'-3 1/4"	130'-6 3/4"	SKIMMER
74	159'-1"	132'-7 1/2"	AQUEDUCT VALVE BOX
75	161'-3 1/2"	132'-5"	COLUMN PIPE SPRAY
76	160'-10 1/2"	141'-6 1/4"	SKIMMER
77	161'-5 1/4"	144'-5 1/4"	VALVE BOX
78	163'-7 1/4"	146'-1 3/4"	CONSTRUCTION POINT
79	164'-0 1/4"	135'-8 1/2"	FLOOR INLET
80	172'-3 1/4"	133'-7"	CENTER OF MAIN DRAIN
81	175'-7 3/4"	129'-10 3/4"	CENTER OF MAIN DRAIN
82	54'-7 1/2"	18'-3 1/2"	CENTER OF RADIUS
83	175'-7 1/4"	134'-10"	UNDERWATER LIGHT
84	182'-3"	127'-6 3/4"	CONSTRUCTION POINT
85	185'-4 3/4"	129'-4"	UNDERWATER LIGHT
86	183'-4 1/4"	128'-3 1/2"	CONSTRUCTION POINT
87	184'-4 3/4"	130'-2"	FLOOR INLET
88	187'-11 1/2"	130'-2"	CONSTRUCTION POINT
89	191'-9 1/2"	114'-3 1/2"	CENTER OF RADIUS
90	185'-6 3/4"	133'-5 3/4"	CENTER OF MAIN DRAIN
91	180'-9"	140'-3 1/2"	FLOOR INLET
92	174'-0 1/2"	147'-8 1/2"	FLOOR INLET
93	163'-11"	147'-7 1/2"	CONSTRUCTION POINT
94	164'-10 1/4"	151'-7 1/4"	CONSTRUCTION POINT
95	170'-4"	150'-11"	CENTER OF RADIUS
96	180'-9"	153'-1 1/2"	FLOOR INLET
97	175'-10"	159'-10"	FLOOR INLET
98	174'-1 3/4"	162'-2 1/2"	CONSTRUCTION POINT
99	174'-3 1/2"	162'-8 1/4"	CENTER OF RADIUS
100	172'-1 1/2"	164'-0"	WALL INLET
101	176'-3 1/2"	168'-4 1/4"	CENTER OF RADIUS
102	176'-5 1/2"	168'-9 3/4"	CONSTRUCTION POINT
103	175'-0 3/4"	169'-3 3/4"	CENTER OF RADIUS
104	180'-9"	166'-6 1/2"	FLOOR INLET
105	174'-8 3/4"	172'-7 1/4"	CENTER OF RADIUS
106	180'-9"	180'-1"	FLOOR INLET
107	176'-11 1/4"	184'-10 3/4"	CENTER OF RADIUS
108	177'-6 3/4"	186'-2 1/4"	CONSTRUCTION POINT
109	183'-11"	189'-3"	FLOOR INLET
110	185'-10"	196'-11"	UNDERWATER LIGHT
111	181'-8"	195'-3"	CONSTRUCTION POINT
112	188'-7 1/2"	194'-11"	CONSTRUCTION POINT
113	189'-3 1/2"	208'-5 3/4"	CONSTRUCTION POINT

1 SP1.4 **LOCATION POINT SCHEDULE**
1/8"=1'-0"

ISSUE DATE
FEB. 20, 2002
REVISIONS

ADDISON ATHLETIC CLUB EXPANSION AND LEISURE POOL
ADDISON, TEXAS

RON HOBBS ARCHITECTS
614 W. MAIN ST. SUITE #200 GARLAND, TEXAS 75040
(972) 494-0174 FAX (972) 494-0722

JOB NUMBER
0012

SHEET NUMBER
SP1.4
100% CD's

© 2002 Counsilman/Hunsaker & Associates, Inc.

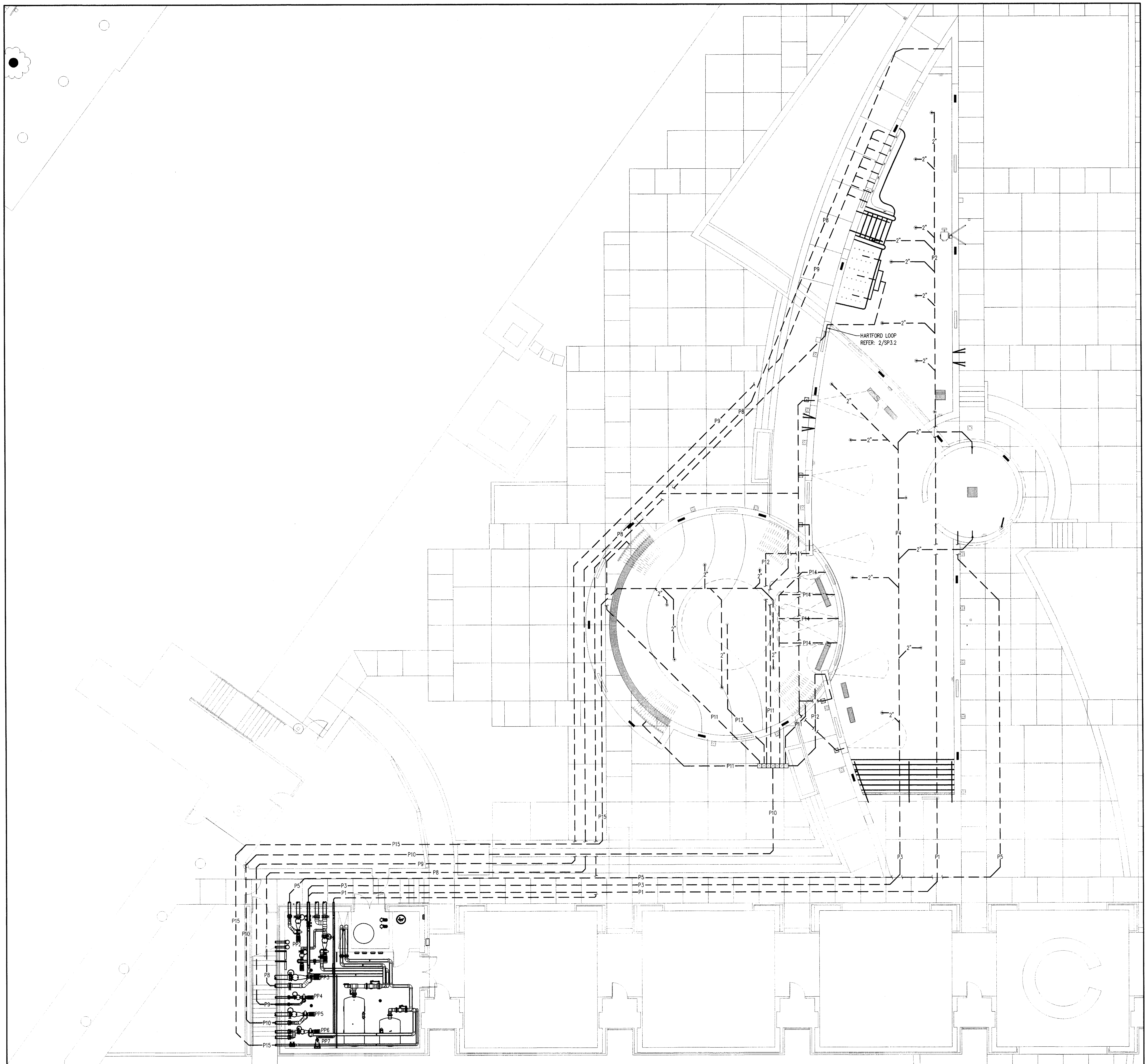

1 / SP2.0 SUPPLY PIPPING PLAN
1/8"=1'-0"

PIPING NOTES
(PERTAINS TO ALL PIPING)

1. ALL PIPING SHOWN SHALL BE CONSIDERED DIAGRAMMATIC.
2. COORDINATE ALL PIPING WITH PLUMBING MECHANICAL AND ELECTRICAL.
3. ALL PIPING BELOW POOL FLOOR SHALL BE ENCASED IN CONCRETE.
4. COORDINATE ALL POOL PIPE ROUTING AND ELEVATIONS WITH ALL TRADES.
5. ALL ENCASED PIPES SHOWN ARE NOMINAL PIPE DIAMETERS, SCHEDULE 40 PVC, ALL EXPOSED PIPES ARE NOMINAL PIPE DIAMETERS, SCHEDULE 80 PVC UNLESS OTHERWISE INDICATED.
6. ALL SWIMMING POOL PIPING MUST MEET ASTM D-1785 AND BE NSF APPROVED. SEE SPECIFICATIONS FOR MORE DETAIL.
7. ALL DIMENSIONS ARE SHOWN TO INSIDE FINISHED WALLS AND DO NOT TAKE INTO ACCOUNT FLOOR SLOPES.
8. INSTALL FLOW SENSORS AND/OR IMPACT FLOW METERS 10 PIPE DIAMETERS DOWNSTREAM AND 5 PIPE DIAMETERS UPSTREAM OF ANY FITTING.
9. THE CHEMICAL SENSOR LINE SHALL BE A 1/2" PVC LINE EXTENDING FROM THE WET CELL SENSOR TO THE POOL'S RESPECTIVE FILL FUNNEL.

LEGEND

- WALL INLET REFER: 17/SP13.1
- FLOOR INLET
- CURRENT RIVER & VORTEX NOZZLES REFER: 10/SP3.1
- MAIN DRAIN BOX REFER: 6/SP13.1
- SKIMMER REFER: 5 & 6/SP1.2
- BELOW GRADE PIPING
- VALVE BOX, 14"x14" DIAMOND TREAD HINGED BRASS FRAME ZURN Z-1461 WITH VANDAL PROOF SLIP RESISTANT DECK COVER WHERE SHOWN
- SKIMMER COVER, PVC NON-SLIP SURFACE AT 10 1/2" SQUARE WITH VANDAL PROOF FASTNERS

PUMP SCHEDULE

		SPECIFICATIONS		
ID	DESCRIPTION	GPM	TDH	HP
PP1	LEISURE POOL RECIRCULATION PUMP	790	60	20
PP2	VORTEX PUMP	500	40	10
PP3	WATER FALL PUMP	750	40	15
PP4	LEISURE POOL HYDROTHERAPY PUMP	190	40	3
PP5	CHILDREN'S WATER FEATURE PUMP	1000	40	15
PP6	CHILDREN'S POOL RECIRCULATION PUMP	250	60	7.5
PP7	AIR BLOWER	70 SCFM @ 75" H20		3
PP8	STENNER PUMP	–	–	–
PP9	STENNER PUMP	–	–	–
PP10	SEASONAL BYPASS	200	60	5

PIPING SCHEDULE

ID	SIZE	DESCRIPTION
P1	6"	TO UPPER POOL INLETS – 1
P2	4"	TO UPPER POOL INLETS – 2
P3	4"	TO LOWER POOL INLETS – 1
P4	3"	TO LOWER POOL INLETS – 2
P5	6"	TO VORTEX NOZZLE
P6	6"	WATER FALL PRIMARY
P7	3"	LOWER POOL FEATURE
P8	6"	TO WATERFALL BRANCH
P9	3"	TO HYDROTHERAPY INLETS
P10	6"	TO WATER FEATURES VALVE BOX
P11	3"	TO SPRAYBAR
P12	4"	TO AQUADUCT
P13	2"	TO WATER WHOPPY
P14	2"	TO WALLSPRAY
P15	4"	TO CHILDRENS' POOL INLETS
P16	8"	FROM LEISURE POOL SKIMMERS
P17	8"	FROM LEISURE POOL MAIN DRAINS
P18	6"	FROM CHILDRENS' POOL SKIMMERS – 1
P19	4"	FROM CHILDRENS' POOL SKIMMERS – 2
P20	8"	FROM VORTEX MAIN DRAIN
P21	8"	FROM WATER FALL MAIN DRAINS
P22	4"	FROM HYDROTHERAPY MAIN DRAIN
P23	8"	FROM WATER FEATURES MAIN DRAINS
P24	6"	FROM CHLDRENS' POOL MAIN DRAINS
P25	2"	EQUALIZER TAP
P26	3"	FROM BLOWER TO BUBBLE COUCH
F1	3"	LEISURE POOL FILL LINE
F2	3"	CHILDRENS POOL FILL LINE
S1	2"	LEISURE POOL STATIC LINE
S2	2"	CHILDRENS POOL STATIC LINE

ISSUE DATE
FEB. 20, 2002
REVISIONS

ADDISON ATHLETIC CLUB EXPANSION AND LEISURE POOL
ADDISON, TEXAS

RON HOBBS ARCHITECTS
614 W. MAIN ST. SUITE #200 GARLAND, TEXAS 75040
(972) 494-0174 FAX (972) 494-0722

JOB NUMBER
0012

SHEET NUMBER
SP2.0
100% CD's

© 2002 Counsilman/Hunsaker & Associates, Inc.

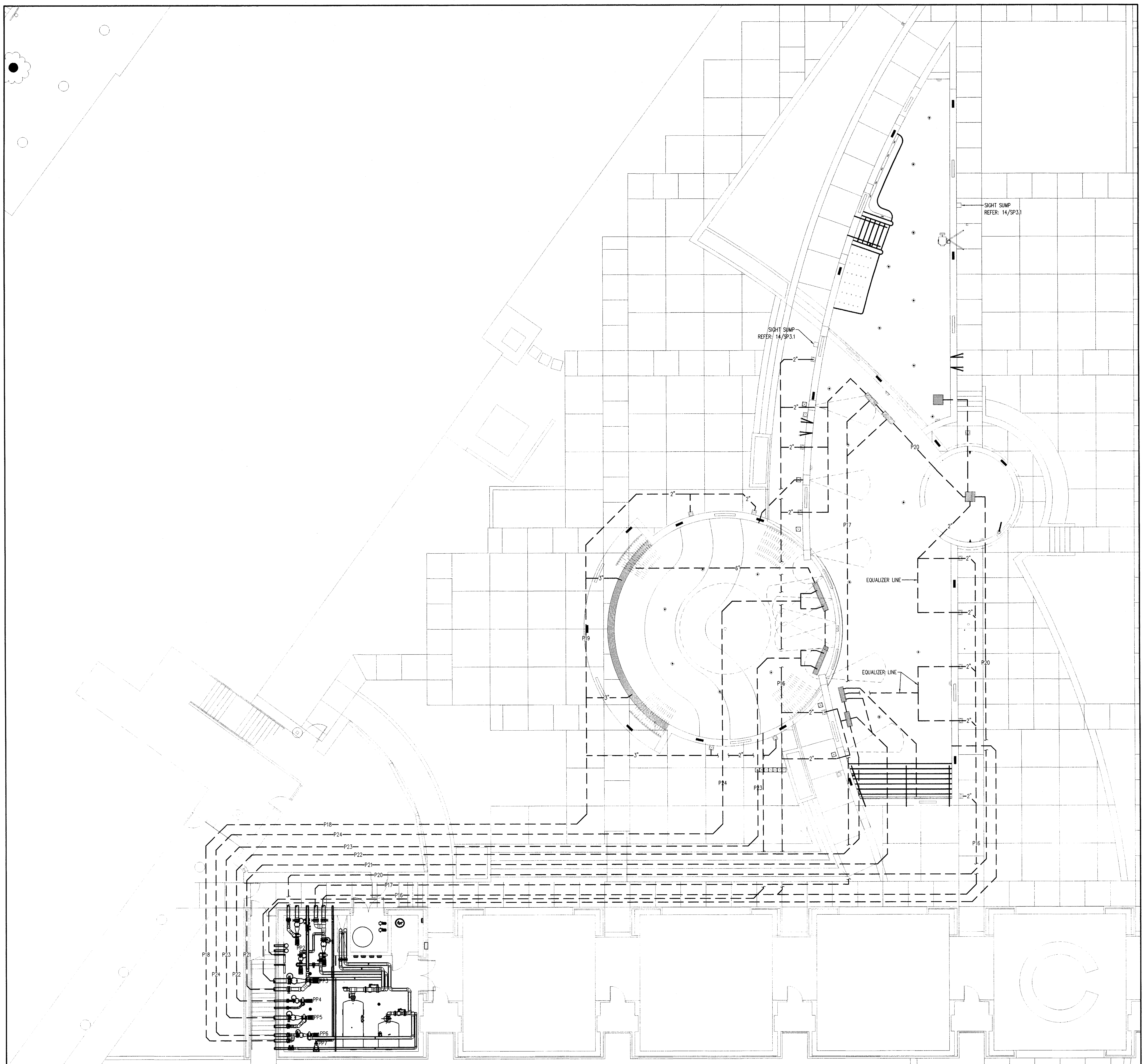

1 SP2.1 **RETURN PIPPING PLAN**
1/8"=1'-0"

PIPING NOTES
(PERTAINS TO ALL PIPING)

1. ALL PIPING SHOWN SHALL BE CONSIDERED DIAGRAMMATIC.
2. COORDINATE ALL PIPING WITH PLUMBING MECHANICAL AND ELECTRICAL.
3. ALL PIPING BELOW POOL FLOOR SHALL BE ENCASED IN CONCRETE.
4. COORDINATE ALL POOL PIPE ROUTING AND ELEVATIONS WITH ALL TRADES.
5. ALL ENCASED PIPES SHOWN ARE NOMINAL PIPE DIAMETERS, SCHEDULE 40 PVC, ALL EXPOSED PIPES ARE NOMINAL PIPE DIAMETERS, SCHEDULE 80 PVC UNLESS OTHERWISE INDICATED.
6. ALL SWIMMING POOL PIPING MUST MEET ASTM D-1785 AND BE NSF APPROVED. SEE SPECIFICATIONS FOR MORE DETAIL.
7. ALL DIMENSIONS ARE SHOWN TO INSIDE FINISHED WALLS AND DO NOT TAKE INTO ACCOUNT FLOOR SLOPES.
8. INSTALL FLOW SENSORS AND/OR IMPACT FLOW METERS 10 PIPE DIAMETERS DOWNSTREAM AND 5 PIPE DIAMETERS UPSTREAM OF ANY FITTING.
9. THE CHEMICAL SENSOR LINE SHALL BE A 1/2" PVC LINE EXTENDING FROM THE WET CELL SENSOR TO THE POOL'S RESPECTIVE FILL FUNNEL.

LEGEND

- WALL INLET REFER: 17/SP13.1
- FLOOR INLET
- CURRENT RIVER & VORTEX NOZZLES REFER: 10/SP3.1
- MAIN DRAIN BOX REFER: 6/SP13.1
- SKIMMER REFER: 5 & 6/SP1.2
- BELOW GRADE PIPING
- VALVE BOX, 14"x14" DIAMOND TREAD HINGED BRASS FRAME ZURN Z-1461 WITH VANDAL PROOF SLIP RESISTANT DECK COVER WHERE SHOWN
- SKIMMER COVER, PVC NON-SLIP SURFACE AT 10 1/2" SQUARE WITH VANDAL PROOF FASTNERS

PUMP SCHEDULE

		SPECIFICATIONS		
ID	DESCRIPTION	GPM	TDH	HP
PP1	LEISURE POOL RECIRCULATION PUMP	790	60	20
PP2	VORTEX PUMP	500	40	10
PP3	WATER FALL PUMP	750	40	15
PP4	LEISURE POOL HYDROTHERAPY PUMP	190	40	3
PP5	CHILDREN'S WATER FEATURE PUMP	1000	40	15
PP6	CHILDREN'S POOL RECIRCULATION PUMP	250	60	7.5
PP7	AIR BLOWER	70 SCFM @ 75" H20		3
PP8	STENNER PUMP	–	–	–
PP9	STENNER PUMP	–	–	–
PP10	SEASONAL BYPASS	200	60	5

PIPING SCHEDULE

ID	SIZE	DESCRIPTION
P1	6"	TO UPPER POOL INLETS – 1
P2	4"	TO UPPER POOL INLETS – 2
P3	4"	TO LOWER POOL INLETS – 1
P4	3"	TO LOWER POOL INLETS – 2
P5	6"	TO VORTEX NOZZLE
P6	6"	WATER FALL PRIMARY
P7	3"	LOWER POOL FEATURE
P8	6"	TO WATERFALL BRANCH
P9	3"	TO HYDROTHERAPY INLETS
P10	6"	TO WATER FEATURES VALVE BOX
P11	3"	TO SPRAYBAR
P12	4"	TO AQUADUCT
P13	2"	TO WATER WHOPPY
P14	2"	TO WALLSPRAY
P15	4"	TO CHILDRENS' POOL INLETS
P16	8"	FROM LEISURE POOL SKIMMERS
P17	8"	FROM LEISURE POOL MAIN DRAINS
P18	6"	FROM CHILDRENS' POOL SKIMMERS – 1
P19	4"	FROM CHILDRENS' POOL SKIMMERS – 2
P20	8"	FROM VORTEX MAIN DRAIN
P21	8"	FROM WATER FALL MAIN DRAINS
P22	4"	FROM HYDROTHERAPY MAIN DRAIN
P23	8"	FROM WATER FEATURES MAIN DRAINS
P24	6"	FROM CHLDRENS' POOL MAIN DRAINS
P25	2"	EQUALIZER TAP
P26	3"	FROM BLOWER TO BUBBLE COUCH
F1	3"	LEISURE POOL FILL LINE
F2	3"	CHILDRENS POOL FILL LINE
S1	2"	LEISURE POOL STATIC LINE
S2	2"	CHILDRENS POOL STATIC LINE

ISSUE DATE
FEB. 20, 2002
REVISIONS

ADDISON ATHLETIC CLUB EXPANSION
AND
LEISURE POOL
ADDISON, TEXAS

RON HOBBS ARCHITECTS
614 W. MAIN ST. SUITE #200 GARLAND, TEXAS 75040
(972) 494-0174 FAX (972) 494-0722

JOB NUMBER
0012

SHEET NUMBER
SP2.1
100% CD's

© 2002 Counsilman/Hunsaker & Associates, Inc.

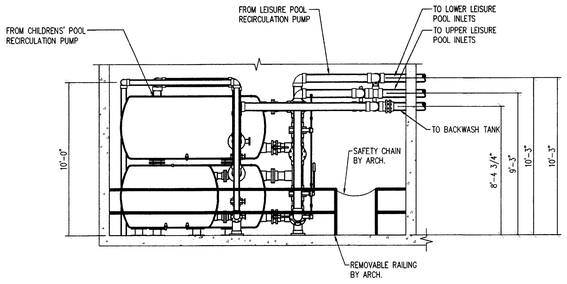

4 / SP3.0 **PUMP PIT SECTION**
1/4" = 1'-0"

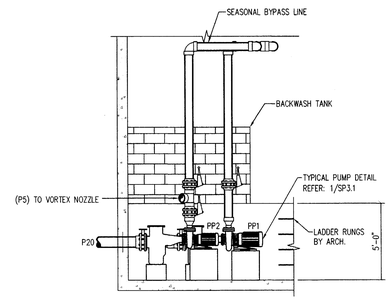

5 / SP3.0 **SEASONAL BYPASS LINE DETAIL**
1/4" = 1'-0"

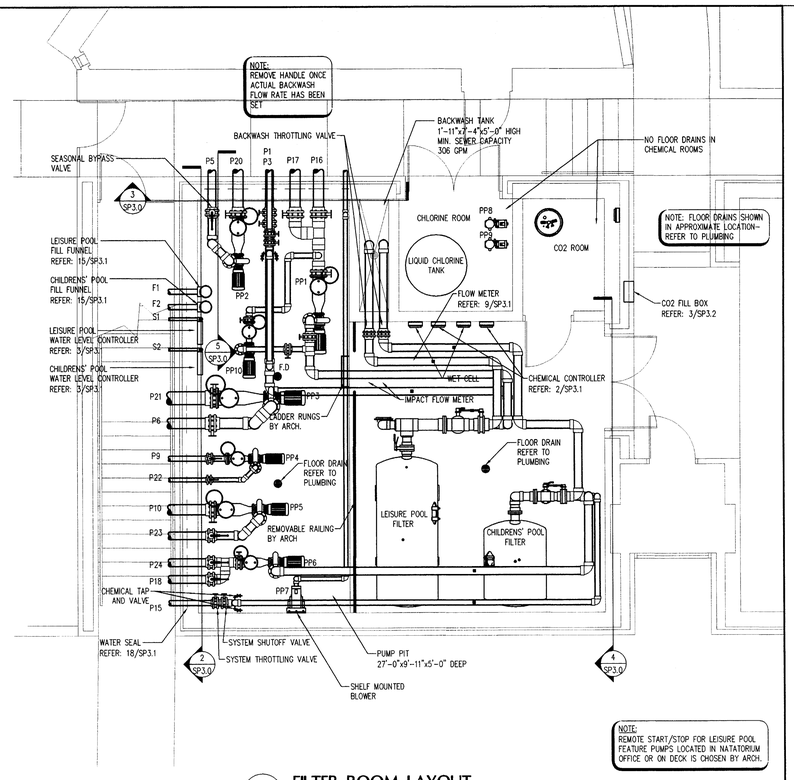

1 / SP3.0 **FILTER ROOM LAYOUT**
1/4" = 1'-0"

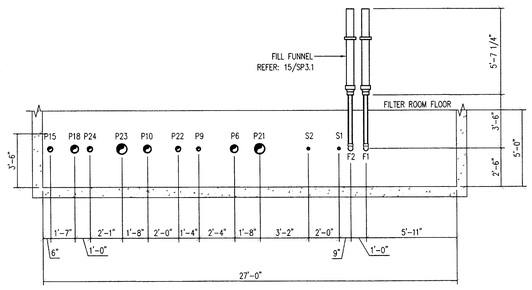

2 / SP3.0 **PUMP PIT SECTION**
1/4" = 1'-0"

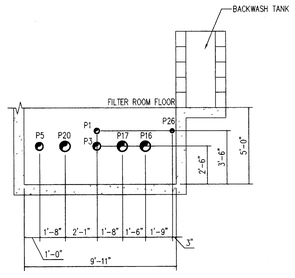

3 / SP3.0 **PUMP PIT SECTION**
1/4" = 1'-0"

PUMP SCHEDULE

		SPECIFICATIONS		
ID	DESCRIPTION	GPM	TDH	HP
PP1	LEISURE POOL RECIRCULATION PUMP	790	60	20
PP2	VORTEX PUMP	500	40	10
PP3	WATER FALL PUMP	750	40	15
PP4	LEISURE POOL HYDROTHERAPY PUMP	190	40	3
PP5	CHILDREN'S WATER FEATURE PUMP	1000	40	15
PP6	CHILDREN'S POOL RECIRCULATION PUMP	250	60	7.5
PP7	AIR BLOWER	70 SCFM @ 75" H20		3
PP8	STENNER PUMP	–	–	–
PP9	STENNER PUMP	–	–	–
PP10	SEASONAL BYPASS	200	60	5

PIPING SCHEDULE

ID	SIZE	DESCRIPTION
P1	6"	TO UPPER POOL INLETS – 1
P2	4"	TO UPPER POOL INLETS – 2
P3	4"	TO LOWER POOL INLETS – 1
P4	3"	TO LOWER POOL INLETS – 2
P5	6"	TO VORTEX NOZZLE
P6	6"	WATER FALL PRIMARY
P7	3"	LOWER POOL FEATURE
P8	6"	TO WATERFALL BRANCH
P9	3"	TO HYDROTHERAPY INLETS
P10	6"	TO WATER FEATURES VALVE BOX
P11	3"	TO SPRAYBAR
P12	4"	TO AQUADUCT
P13	2"	TO WATER WHOPPY
P14	2"	TO WALLSPRAY
P15	4"	TO CHILDRENS' POOL INLETS
P16	8"	FROM LEISURE POOL SKIMMERS
P17	8"	FROM LEISURE POOL MAIN DRAINS
P18	6"	FROM CHILDRENS' POOL SKIMMERS – 1
P19	4"	FROM CHILDRENS' POOL SKIMMERS – 2
P20	8"	FROM VORTEX MAIN DRAIN
P21	8"	FROM WATER FALL MAIN DRAINS
P22	4"	FROM HYDROTHERAPY MAIN DRAIN
P23	8"	FROM WATER FEATURES MAIN DRAINS
P24	6"	FROM CHILDRENS' POOL MAIN DRAINS
P25	2"	EQUALIZER TAP
P26	3"	FROM BLOWER TO BUBBLE COUCH
F1	3"	LEISURE POOL FILL LINE
F2	3"	CHILDRENS POOL FILL LINE
S1	2"	LEISURE POOL STATIC LINE
S2	2"	CHILDRENS POOL STATIC LINE

PIPING LEGEND

- WATER SEAL REFER: 18/SP3.1
- VALVE
- VALVE
- FLOOR DRAIN REFER TO PLUMBING
- SEWER LINE AND VENT TRAP REFER TO PLUMBING

ISSUE DATE
FEB. 20, 2002

REVISIONS

ADDISON ATHLETIC CLUB EXPANSION AND LEISURE POOL
ADDISON, TEXAS

RON HOBBS ARCHITECTS
614 W. MAIN ST. SUITE #200 GARLAND, TEXAS 75040
(972) 494-0174 FAX (972) 494-0722

COUNSILMAN/HUNSAKER & ASSOC.
2405 LINCOLN ST. DALLAS, TX 75202
PHONE (214) 528-9100 FAX (214) 528-9200

STATE OF TEXAS
DALE RICHARD BUCKLE
84429
LICENSED
PROFESSIONAL ENGINEER

JOB NUMBER
0012

SHEET NUMBER
SP3.0
100% CD's

© 2002 Counsilman/Hunsaker & Associates, Inc.

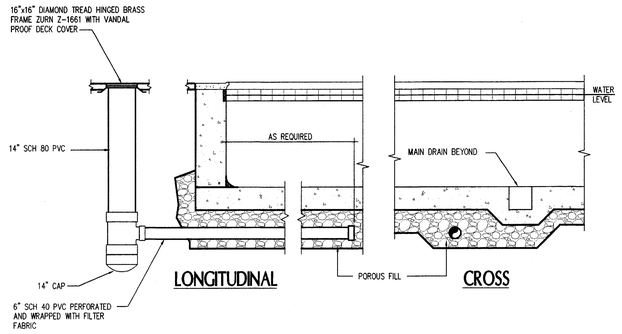

14 SP3.1 **SIGHT SUMP**
3/8" = 1'-0"

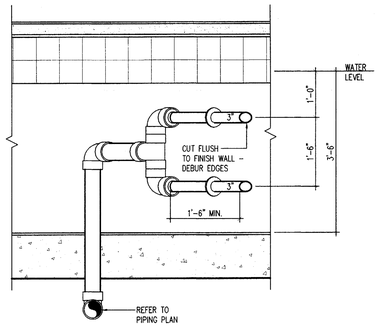

10 SP3.1 **VORTEX NOZZLES**
3/4" = 1'-0"

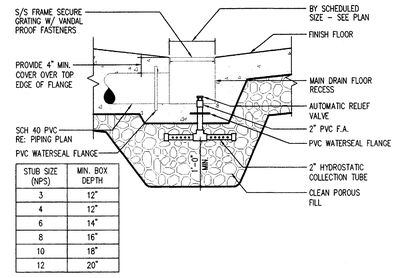

STUB SIZE (NPS)	MIN. BOX DEPTH
3	12"
4	12"
6	14"
8	16"
10	18"
12	20"

6 SP3.1 **MAIN DRAIN**
3/4" = 1'-0"

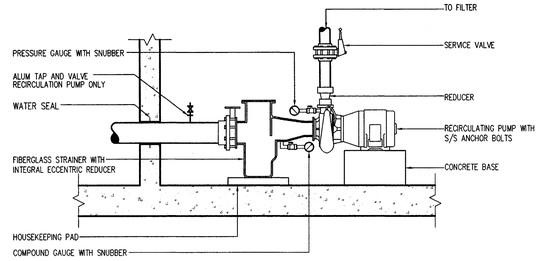

1 SP3.1 **TYPICAL PUMP DETAIL**
1/2" = 1'-0"

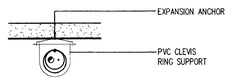

PLAN

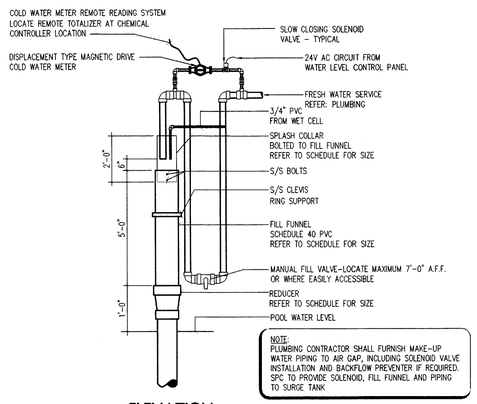

NOTE:
PLUMBING CONTRACTOR SHALL FURNISH MAKE-UP WATER PIPING TO AIR GAP, INCLUDING SOLENOID VALVE INSTALLATION AND BACKFLOW PREVENTER IF REQUIRED. SPC TO PROVIDE SOLENOID, FILL FUNNEL AND PIPING TO SURGE TANK

ELEVATION

FILL FUNNEL SCHEDULE			
POOL	FILL FUNNEL SIZE	REDUCER SIZE	SPLASH COLLAR SIZE
LEISURE	6" x 3"	6" x 3"	4"
CHILDREN'S	6" x 3"	6" x 3"	4"

15 SP3.1 **FILL FUNNEL**
3/8" = 1'-0"

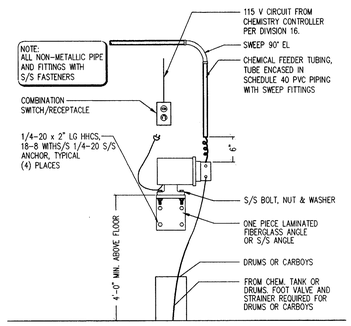

11 SP3.1 **CHLORINE PUMP**
N.T.S.

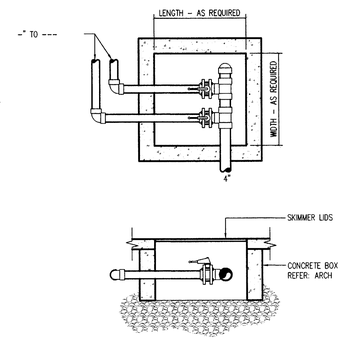

7 SP3.1 **VORTEX VALVE BOX**
1/2" = 1'-0"

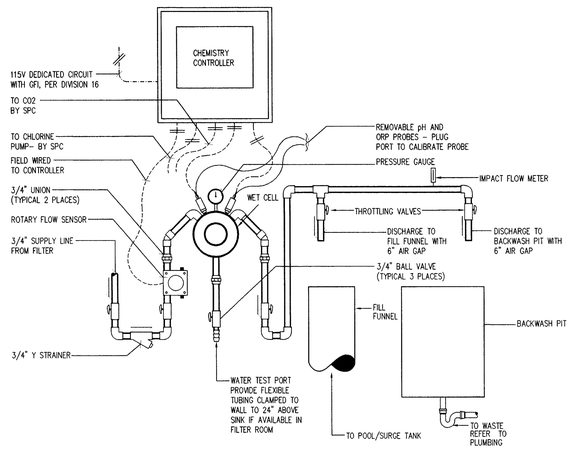

2 SP3.1 **CHEMICAL CONTROLLER**
N.T.S.

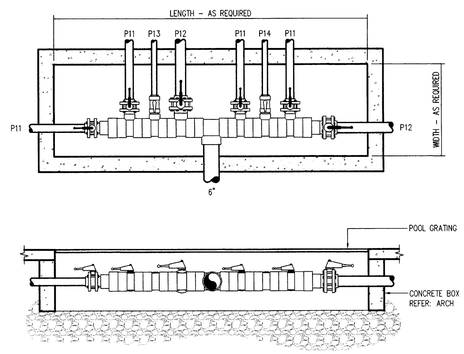

8 SP3.1 **WATER FEATURES VALVE BOX**
1/2" = 1'-0"

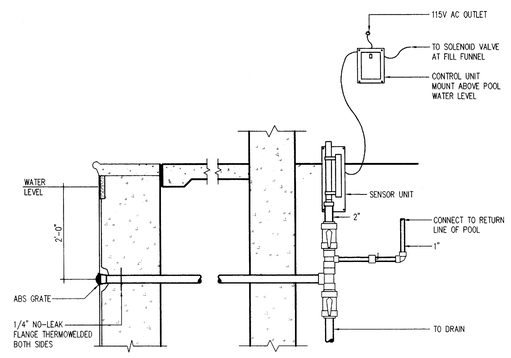

3 SP3.1 **WATER LEVEL CONTROLLER**
3/4" = 1'-0"

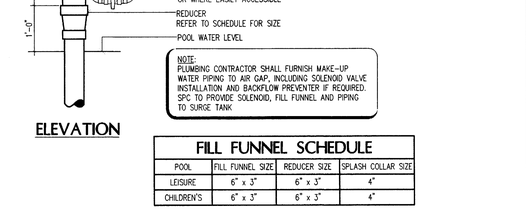

NOTES:
1. THIS IS A MINIMUM ENCASEMENT FOR UNDER POOL PIPING
2. REFER TO STRUCTURAL FOR MORE DETAIL.
3. ENCASEMENT MAY BE DONE PRIOR TO THE POUR OF THE POOL FLOOR AND STRUCTURALLY TIED TO THE POOL FLOOR.

16 SP3.1 **CONCRETE ENCASED PIPE**
1/2" = 1'-0"

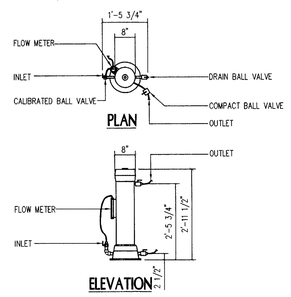

12 SP3.1 **ALUM FEEDER**
1/2" = 1'-0"

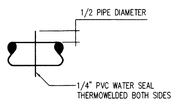

18 SP3.1 **WATER SEAL**
3/4" = 1'-0"

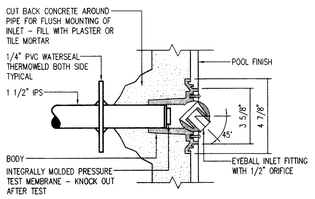

17 SP3.1 **WALL INLET**
3" = 1'-0"

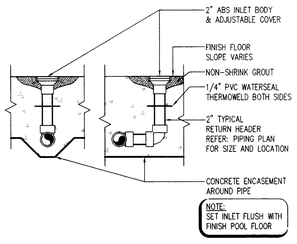

NOTE:
SET INLET FLUSH WITH FINISH POOL FLOOR

13 SP3.1 **FLOOR INLETS**
3/4" = 1'-0"

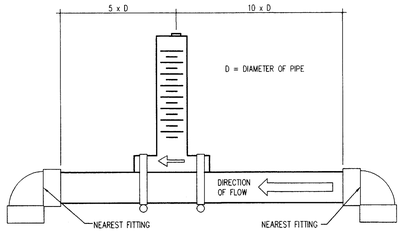

9 SP3.1 **FLOW METER**
3/4" = 1'-0"

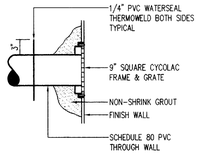

5 SP3.1 **FILL LINE**
1" = 1'-0"

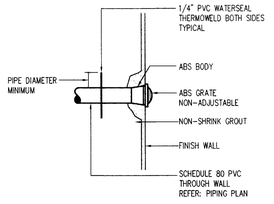

4 SP3.1 **STATIC LINE**
1 1/2" = 1'-0"

ISSUE DATE
FEB. 20, 2002

REVISIONS

ADDISON ATHLETIC CLUB EXPANSION AND LEISURE POOL
ADDISON, TEXAS

RON HOBBS ARCHITECTS
614 W. MAIN ST. SUITE #200 GARLAND, TEXAS 75040
(972) 494-0174 FAX (972) 494-0722

COUNSILMAN-HUNSAKER & ASSOC.
PHONE (314) 991-1177 FAX (314) 991-1460

2/19/02

SEAL OF ENGINEER
DALE RICHARD DUCLOS
84429
TEXAS
6012

SHEET NUMBER
SP3.1
100% CD's

© 2002 Counsilman/Hunsaker & Associates, Inc.

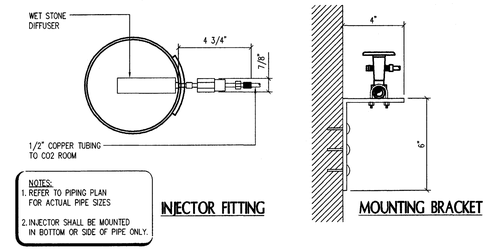

NOTES:
1. REFER TO PIPING PLAN FOR ACTUAL PIPE SIZES
2. INJECTOR SHALL BE MOUNTED IN BOTTOM OR SIDE OF PIPE ONLY.

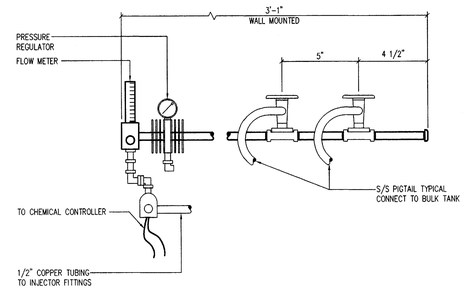

5 SP3.2 **CO2/PH CONTROL MANIFOLD**
3" = 1'-0"
02/06/02

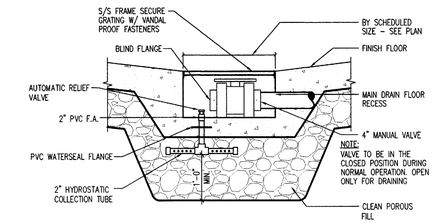

1 SP3.2 **MAIN DRAIN VALVE**
3/4" = 1'-0"
02/06/02

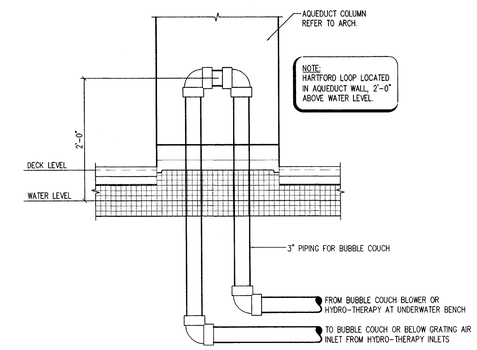

2 SP3.2 **BUBBLE COUCH HARTFORD LOOP**
1" = 1'-0"
02/06/02

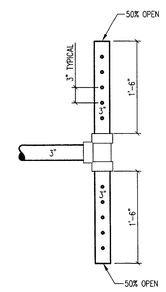

6 SP3.2 **VORTEX PREVENTER**
1" = 1'-0"
02/06/02

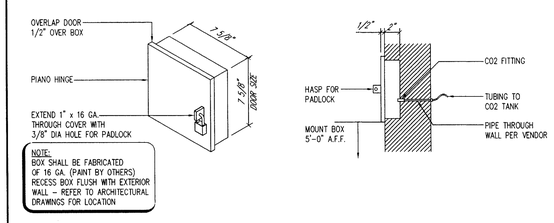

NOTE:
BOX SHALL BE FABRICATED OF 16 GA. (PAINT BY OTHERS) RECESS BOX FLUSH WITH EXTERIOR WALL - REFER TO ARCHITECTURAL DRAWINGS FOR LOCATION

3 SP3.2 **CO2 FILL BOX DETAIL**
1 1/2" = 1'-0"
02/06/02

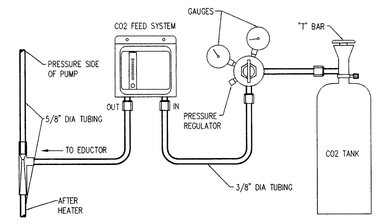

4 SP3.2 **CO2 FEED SYSTEM W/VENTURI INJECTOR**
1/2" = 1'-0"
02/06/02

ISSUE DATE
FEB. 20, 2002

REVISIONS

ADDISON ATHLETIC CLUB EXPANSION AND LEISURE POOL
ADDISON, TEXAS

RON HOBBS ARCHITECTS
614 W. MAIN ST. SUITE #200 GARLAND, TEXAS 75040
(972) 494-0174 FAX (972) 494-0722

COUNSELMAN/HUNSAKER & ASSOC.
2400 MAIN ST. E. STE. 100 PLANO, TX 75074
PHONE (214) 424-4.00 FAX (214) 424-4.01

2/10/02

STATE OF TEXAS
DALE RICHARD DeCLUE
84429
LICENSED
PROFESSIONAL ENGINEER
02/12

SHEET NUMBER
SP3.2
100% CD's

© 2002 Counsilman/Hunsaker & Associates, Inc.

ISSUE DATE
FEB. 20, 2002

REVISIONS

LEGEND

— — — —	ELECTRICAL LINE
———————	WATER LINE
· · · · · ·	AIR LINE
— · —	1 PHASE POWER
— · · —	3 PHASE POWER
———————	VENT LINE

SYMBOL LEGEND

- BUTTERFLY VALVE
- CHECK VALVE
- PRESSURE/VACCUM/ COMPOUND GUAGE
- BALL VALVE
- ELECTRIC BALL VALVE
- IMPACT FLOW METER
- THERMOMETER
- DIGITAL THERMOMETER
- SOLENOID VALVE
- VENTURI
- POWER CORD
- HAIR AND LINT STRAINER
- FLOW SENSOR
- FLOW METER
- FLOW INTERLOCK
- PUMP

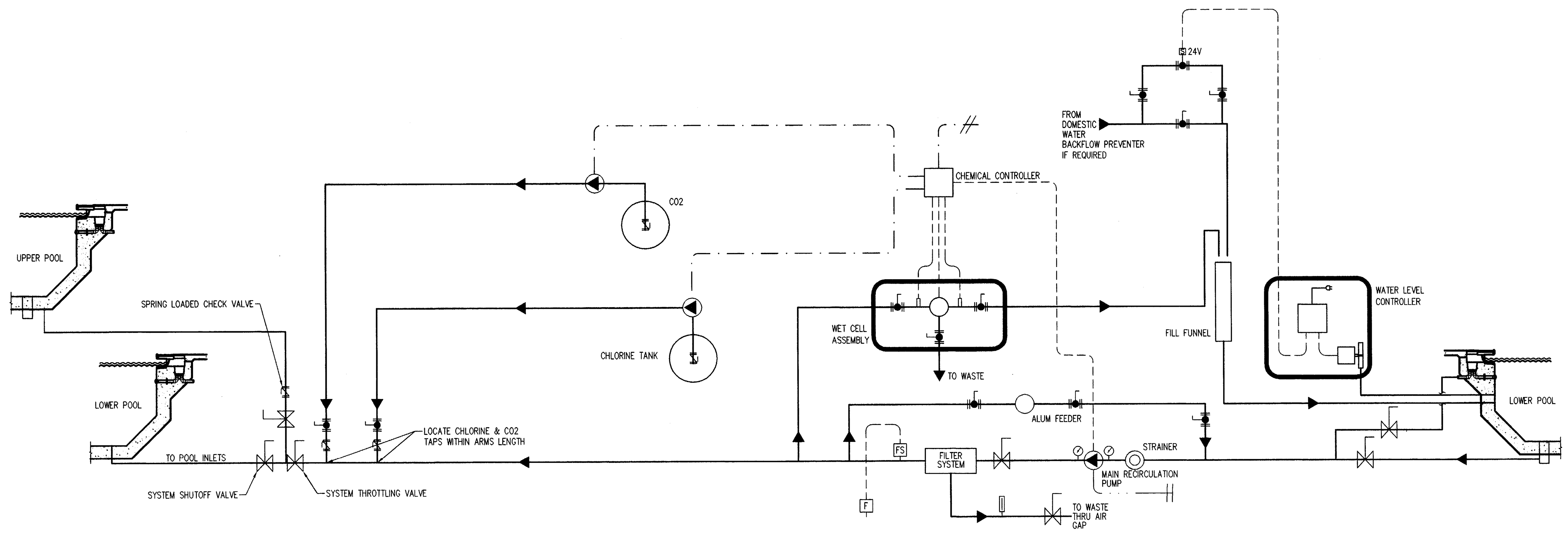

1 SP3.3 **LEISURE POOL CHEMICAL SCHEMATIC**
N.T.S.

LEGEND

— — — —	ELECTRICAL LINE
———————	WATER LINE
· · · · · ·	AIR LINE
— · —	1 PHASE POWER
— · · —	3 PHASE POWER
———————	VENT LINE

SYMBOL LEGEND

- BUTTERFLY VALVE
- CHECK VALVE
- PRESSURE/VACCUM/ COMPOUND GUAGE
- BALL VALVE
- ELECTRIC BALL VALVE
- IMPACT FLOW METER
- THERMOMETER
- DIGITAL THERMOMETER
- SOLENOID VALVE
- VENTURI
- POWER CORD
- HAIR AND LINT STRAINER
- FLOW SENSOR
- FLOW METER
- FLOW INTERLOCK
- PUMP

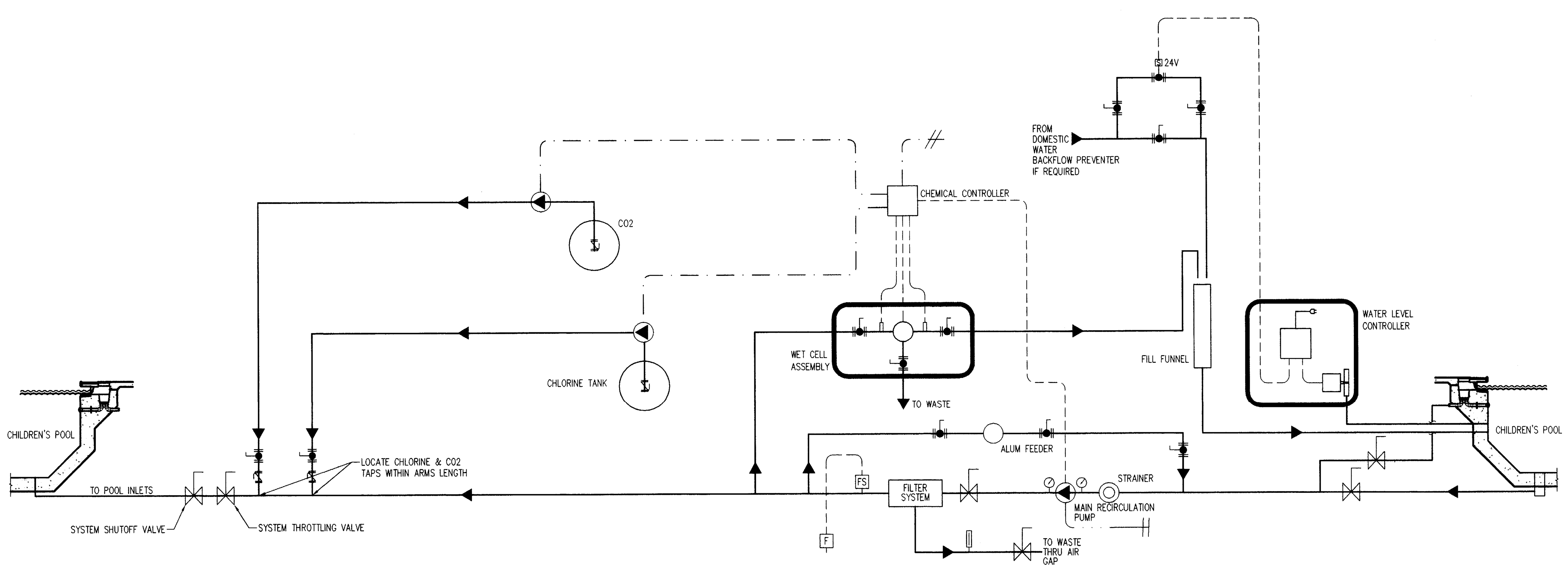

2 SP3.3 **CHILDREN'S POOL CHEMICAL SCHEMATIC**
N.T.S.

ADDISON ATHLETIC CLUB EXPANSION AND LEISURE POOL
ADDISON, TEXAS

RON HOBBS ARCHITECTS
614 W. MAIN ST. SUITE #200 GARLAND, TEXAS 75040
(972) 494-0174 FAX (972) 494-0722

JOB NUMBER
0012

SHEET NUMBER
SP3.3
100% CD's

© 2002 Counsilman/Hunsaker & Associates, Inc.

GENERAL NOTES:

DESIGN CRITERIA

1. THE STRUCTURE IS DESIGNED IN ACCORDANCE WITH THE 2000 INTERNATION BUILDING CODE.
2. DESIGN LIVE LOADS:

ROOF	20 PSF
LEVEL 2 AND CORRIDORS	100 PSF
STAIRWAYS	100 PSF
ROOF MECHANICAL	PER PLAN

3. DESIGN DEAD LOADS:

PARTITIONS	20 PSF
CEILING / MECHANICAL	5 PSF
ROOFING / INSULATION	7 PSF
STRUCTURE	SELF WEIGHT

4. SNOW LOAD — 5 PSF
5. WIND LOAD DESIGN CRITERIA:

EQUIVALENT BASIC WIND SPEED	70 MPH
3 SCREND GUST WIND SPEED	85 MPH
EXPOSURE	C
IMPORTANCE FACTOR	1.0

6. SIESMIC DESIGN DATA

OCCUPANCY CATAGORY	I
SEISMIC USE GROUP	I
IMPORTANCE FACTOR	1.0

7. SPECTRAL RESPONSE COEFFICIENTS
   Sds = 0.010
   Sd1 = 0.032
8. SITE CLASS — A
9. SIESMIC DESIGN CATAGORY — A
10. BASIC SEISMIC-FORCE-RESISTANCE SYSTEM - SHEAR WALL

DRAWINGS

1. BACKGROUND DRAWINGS SHOWN ON THE STRUCTURAL PLANS ARE FOR REFERENCE ONLY. SEE ARCHITECTURAL, MECHANICAL, ELECTRICAL, PLUMBING, AND OTHER DRAWINGS FOR ACTUAL REQUIREMENTS OF NON-STRUCTURAL ELEMENTS.
2. STRUCTURAL DRAWINGS SHOW ELEVATIONS AND RELATIONSHIPS OF STRUCTURAL ELEMENTS IN THEIR FINAL POSITION. CONSTRUCTION MEANS AND METHODS SHALL ALLOW FOR CAMBERS, LOSS OF CAMBER DURING CONSTRUCTION LOADING, DEFLECTIONS, AND NORMAL MOVEMENTS OF STRUCTURAL ELEMENTS DURING CONSTRUCTION.

LATERAL LOAD RESISTING SYSTEM

1. THE LATERAL LOAD RESISTING SYSTEM OF THE BUILDING CONSIST OF THE FOUNDATIONS, SLAB-ON-GRADE, FLOOR SLABS, ROOF DECK DIAPHRAGMS, AND WALLS. THE BUILDING FRAME IS NOT STABLE UNTIL ALL LATERAL LOAD RESISTING ELEMENTS ARE CONSTRUCTION IN THE FINAL CONDITION.

EXISTING CONDITIONS

1. FIELD VERIFY ALL EXISTING DIMENSIONS AND CONDITIONS PRIOR TO START OF SHOP DRAWINGS OR CONSTRUCTION. WHERE INDICATED ON DRAWINGS, SUBMIT RECORD OF FIELD CONDITIONS TO ARCHITECT.
2. EXISTING CONDITIONS REQUIRING MODIFICATIONS TO DOCUMENTS FOR PROPOSED CONSTRUCTION SHALL BE IMMEDIATELY SUBMITTED TO ARCHITECT.

EXISTING CONDITIONS

1. MAIN WIND FORCE RESISTING SYSTEM SUBJECT TO 2000 IBC QUALITY ASSURANCE FOR WIND REQUIREMENTS ARE AS FOLLOWS:
   A. ROOF DECK DIAPHRAGMS.
   B. FLOOR DECK DIAPHRAGMS.
   C. SHEAR WALLS
   D. STRUTS CONNECTED TO BRACED FRAMES.
   E. MASONRY WALLS.
2. REFER TO SPECIFICATIONS FOR TSTING AND SPECIAL INSPECTION REQUIREMENTS.

SUBMITTALS

1. REVIEW OF SUBMITTAL INFORMATION SHALL BE FOR GENERAL REQUIREMENTS OF PROJECT; AND SHALL NOT INCLUDE CHECKING OF DETAILED DIMENSIONS OR DETAILED QUANTITIES, NOR REVIEW OF THE CONTRACTOR'S SAFETY MEASURES IN, ON, OR NEAR THE WORK SITE, OR MEANS AND METHODS OF DOING WORK.
2. CONTRACTOR SHALL CHECK ALL SHOP DRAWING SUBMITTALS FOR COMPLIANCE WITH CONTRACT DOCUMENTS.
3. CONTRACTOR SHALL INDICATE CHECKING AND APPROVAL OF SHOP DRAWINGS BY AFFIXING HIS SHOP DRAWING STAMP WITH THE DATE OF APPROVAL AND NAME OF PERSON APPROVING SHOP DRAWINGS.
4. CONSTRUCTION SCHEDULE SHALL ALLOW 2 WEEKS FOR SHOP DRAWING REVIEW AND RETURN BY THE STRUCTURAL ENGINEER. REVIEW BY THE DESIGN TEAM SHALL BE FOR GENERAL COMPLIANCE WITH THE COMPLIANCE WITH THE CONTRACT DOCUMENTS.
5. CONTRACTOR SHALL BE RESPONSIBLE FOR ALL QUANTITIES, DIMENSIONS, CONSTRUCTION MEANS, METHODS, AND JOB SITE SAFETY.
6. ACTIONS TAKEN ON THE SHOP DRAWINGS SHALL NOT RELIEVE THE CONTRACTOR FROM RESPONSIBILITY OF COMPLIANCE WITH CONTRACT DOCUMENTS.

FOUNDATIONS

1. THE SUBSURFACE INFORMATION AND FOUNDATION DESIGN ARE BASED ON REPORT NO. 0701-1049, PREPARED BY FUGRO SOUTH, INC., DATED APRIL 26, 2001.
2. METHODS OF CONSTRUCTION OF FOUNDATION AND OTHER PORTIONS OF PROJECT SHALL COMPLY WITH THE REPORT.

DRILLED PIERS

DRILLED PIERS SHALL COMPLY WITH THE FOLLOWING:

1. PIER DESIGN IS BASED ON THE FOLLOWING:

A.	ALLOWABLE END BEARING:	34 KSF
B.	ALLOWABLE SKIN FRICTION.	5.5 KSF
C.	ALLOWABLE NEGATIVE SKIN FRICTION:	1.0 KSF
D.	BEARING STRATA IS GRAY LIMESTONE	

2. LONGITUDINAL PIER REINFORCING SHALL BE DELIVERED TO SITE IN STANDARD 60' LENGTHS. PIER CASES SHALL BE CUT TO PROPER LENGTHS AFTER PIER DEPTH IS FIELD VERIFIED.
3. SPLICES IN VERTICAL REINFORCING SHALL BE 64 BAR DIAMETERS UNLESS NOTED OTHERWISE.
4. PENETRATION SHALL BE DRILLED FULL DEPTH IN A CONTINUOUS OPERATION. CONCRETE SHALL BE PLACED IN PIER WITHIN 8 HOURS OF COMPLETED DRILLING
5. ELEVATION OF TOP OF PIERS, WHERE NOT GIVEN, IS AT THE BOTTOM OF THE DEEPEST STRUCTURAL ELEMENT SUPPORTED BY THE PIER.
6. PIER SHAFTS ABOVE GRADE SHALL BE FORMED TO SCHEDULED SHAFT DIAMETER.
7. PIERS SHALL NOT BE DRILLED UNTIL ALL SUBGRADE TREATMENTS ARE COMPLETED.
8. PIER SHAFT DIAMETERS SHALL NOT EXCEED THE SCHEDULED DIAMETERS WITHOUT APPROVAL OF THE ENGINEER.
9. PROVIDE ADDITIONAL REINFORCING AND ACCESSORIES AS REQUIRED TO HANDLE AND PLACE CAGE.

FOOTINGS

1. ALLOWABLE BEARING PRESSURE IS 4,000 POUNDS PER SQUARE FOOT.
2. SOILS BELOW FOOTINGS AND EXTENDING 1/2 FOOTING WIDTH ON EACH SIDE OF FOOTING SHALL BE EXCAVATED TO TOP OF ROCK. SELECT FILL SHALL BE REPLACED IN MAXIMUM 8" (LOOSE MEASUREMENT) LIFTS AND COMPACTED TO A MINIMUM 95% ASTM D 698 STANDARD PROCTOR DENSITY AT A MOISTURE CONTENT OF -3% TO +3% OF OPTIMUM.
3. BEARING SURFACES SHALL BE CLEAN AND FREE OF LOOSE OR WET MATERIALS.
4. SIDES OF FOOTING SHALL BE FORMED TO DIMENSIONS SHOWN.

SLAB-ON-GRADE

1. FLOOR SLAB SHALL BE 5" THICK OVER VAPOR BARRIER AND SELECT FILL TO TOP OF ROCK.
2. FLOOR SLAB ON GRADE HAS BEEN DESIGNED AS A STRUCTURAL DIAPHRAGM.
3. REINFORCE SLAB WITH #3 AT 14" EACH WAY, PLACED 2" FROM TOP OF SLAB. PROVIDE ADEQUATE MEANS OF CHAIRING AND ACCESSORY STEEL AS REQUIRED TO SECURE POSITION.
4. PROVIDE CONTRACTION AND/OR ISOLATION JOINTS AT COLUMN CENTERLINES AND AT MAXIMUM SPACING OF 5 FEET. THE MAXIMUM DISTANCE BETWEEN CONSTRUCTION AND/OR ISOLATION JOINTS SHALL BE 80'-0". SEE ARCH'L & LANDSCAPE PLANS FOR PATTERN.
5. SOIL BELOW SLABS SHALL COMPLY WITH THE FOLLOWING:
   A. EXCAVATE TO TOP OF ROCK. AT POOL EXCAVATION MAINTAIN A MINIMUM OF 4" FROM BOTTOM OF POOL TO TOP OF ROCK.
   B. SCARIFY AND RECOMPACT 6" OF EXPOSED SOIL. RECOMPACTED SOIL SHALL BE COMPACTED AT-3% TO +3% OF OPTIMUM MOISTURE CONTENT TO 95% OF ASTM D 698 STANDARD PROCTOR DENSITY. LOOSE LIFT THICKNESS SHALL 6 TO 8".
   C. PLACE LOW PI FILL AT CONTROLLED MOISTURE AND COMPACTION.
6. LOW PI FILL SHALL COMPLY WITH THE FOLLOWING:
   A. MAXIMUM PLASTICITY INDEX OF 6 TO 15.
   B. LIQUID LIMIT LESS THAN 40.
   C. 20 TO 45 PERCENT OF PARTICILES PASSING NO. 200 SIEVE.
7. LOW PI FILL SHALL BE CONTAINED WITHIN LIMITS OF PERIMETER GRADE BEAMS.
8. ALL MOISTURE CONTENTS AND COMPACTIONS SHALL BE VERIFIED BY AN INDEPENDENT TESTING LABORATORY.
9. SEE SPECIFICATIONS FOR BACKFILL REQUIREMENTS AT UTILITY TRENCHES.

CONSTRUCTION IN EXPANSIVE SOILS

1. PROVIDE VOID BOXES UNDER ALL PIER SUPPORTED STRUCTURAL ELEMENTS AT OR BELOW GRADE. ONLY SLABS-ON-GRADE SHALL BEAR ON SOIL.
2. PROVIDE PROPER PROTECTION OF VOID BOXES FROM MOISTURE. VOID BOXES THAT BECOME MOIST OR WEAK SHALL BE REPLACED PRIOR TO PLACING CONCRETE.
3. PROVIDE VOID BOXES DESIGNED TO SUPPORT THE WEIGHT OF REINFORCING STEEL AND WET CONCRETE. PLACE CONCRETE TO PREVENT OVERLOAD AND COLLAPSE OF VOID BOXES.
4. PROVIDE END CLOSURES AND JOINT SEALS TO PREVENT CONCRETE FROM ENTERING VOID BOXES.
5. PROVIDE VOID BOXES SPECIFICALLY PREMANUFACTURED WITH SEALED EDGES TO SHAPES REQUIRED FOR CIRCULAR OR IRREGULAR INTERFACES OF VOID BOXES AND CONCRETE ELEMENTS. FIELD FABRICATION OF VOID BOXES SHALL NOT BE ALLOWED.
6. CONSTRUCTION GRADING SHALL PROVIDE DRAINAGE OF WATER AWAY FROM THE BUILDING FOUNDATION.
7. WATER SHALL NOT POND NEAR BUILDING STRUCTURE. OPEN EXCAVATIONS MUST BE IMMEDIATELY PUMPED DRY OF ALL WATER.
8. THE BUILDING SUBGRADE SHALL BE MAINTAINED AT THE SPECIFIED MOISTURE CONTENT DURING CONSTRUCTION.
9. BACKFILL ON EXTERIOR SIDE OF GRADE BEAMS SHALL BE ON-SITE CLAYS PLACED IN MAXIMUM 8 INCH LIFTS AND COMPACTED TO A MINIMUM OF 85% STANDARD PROCTOR DENSITY PER ASTM D 698 AT OPTIMUM MOISTURE CONTENT.
10. SIDES OF ALL BELOW GRADE CONCRETE CONSTRUCTION SHALL BE FORMED TO THE LINES AND SHAPES SHOWN IN THE SECTIONS AND DETAILS. CONCRETE SHALL NOT BE PLACED AGAINST SOIL.
11. SIDES OF PIER SHAFTS SHALL REMAIN VERTICAL TO THE TOP OF GRADE OR THE TOP OF PIER. MUSHROOMING OF CONCRETE SHALL NOT BE ALLOWED.

CONCRETE REINFORCING

1. ALL CONCRETE REINFORCEMENT SHALL BE OF DOMESTIC MANUFACTURE AND SHALL CONFORM TO ASTM A615, GRADE 60, U.N.O. FIELD BENT DOWELS SHALL CONFORM TO ASTM A-615, GRADE 40.
2. ALL WELDED WIRE FABRIC SHALL CONFORM TO ASTM A-185.
3. DETAILING OF CONCRETE REINFORCEMENT AND ACCESSORIES SHALL BE PER ACI 315.
4. REINFORCING SHOWN IN SECTIONS AND DETAILS IS SCHEMATIC AND INDICATES THAT REINFORCING EXISTS. PROVIDE REINFORCING AS REQUIRED BY SCHEDULE, NOTE, GENERAL NOTES, AND SPECIFICATIONS.
5. LONGITUDINAL BEAM REINFORCING SHOWN IN SECTION OR DETAIL TO BE CONTINUOUS SHALL HAVE TOP BARS HOOKED AT DISCONTINUOUS ENDS WITH STANDARD 90 DEGREE HOOKS.
6. WHEN PERMITTED, WELDING OF REINFORCEMENT SHALL BE PER AWS D1.4.
7. REINFORCING BARS MAY BE SPLICED ONLY AS SHOWN ON THE DRAWINGS EXCEPT THAT REINFORCING DESIGNATED AS "CONTINUOUS" MAY BE LAP SPLICED 36 BAR DIAMETERS. LAP SPLICES OF CONTINUOUS REINFORCEMENT IN UNSCHEDULED BEAMS SHALL BE MADE OVER THE SUPPORT FOR BOTTOM BARS AND AT MID-SPAN FOR TOP BARS.
8. CONCRETE PROTECTION FOR REINFORCEMENT, INCLUDING PRIMARY, STIRRUPS, TIES, ETC. SHALL BE AS NOTED BELOW, OR PER ACI 318 FOR CONDITIONS NOT NOTED:

	FOR CARBONATE, LIGHTWEIGHT AND SAND LIGHTWEIGHT AGGREGATES	FOR SILICEOUS AGGREGATES
CONCRETE PLACED AGAINST SOIL	3 INCHES	3 INCHES
FOOTINGS OR PIERS	3 INCHES	3 INCHES
GRADE BEAMS (FORMED)	3 INCHES BOTTOM	3 INCHES BOTTOM
	2 INCHES SIDE	2 INCHES SIDE
	2 INCHES TOP	2 INCHES TOP
BEAMS, COLUMNS	1-1/2 INCHES	2 INCHES
SLABS, ELEVATED, U.N.O. ON PLAN	1 INCH	1-1/4 INCHES
SLABS ON GRADE	2 INCHES TOP	2 INCHES TOP

DEFORMED BAR ANCHORS

1. DEFORMED BAR ANCHORS (DBA) SHALL BE NELSON, FLUX FILLED DEFORMED BAR ANCHORS, TYPE D2L, WELDED TO STEEL AS SHOWN IN ACCORDANCE WITH THE RECOMMENDATIONS OF THE MANUFACTURER.

CONCRETE

1. CONCRETE PROPORTIONING, MIXING, TRANSPORTING, PLACING, AND CURING SHALL BE PER ACI 301.
2. CONCRETE SURFACES SHALL CONFORM TO TOLERANCE LIMITS PER ACI 117, U.N.O.
3. CONCRETE SHALL HAVE SAND, COARSE AGGREGATES PER ASTM C-33 OR C-330 AS SCHEDULED, TYPE I OR III PORTLAND CEMENT PER ASTM C-150, AND SHALL COMPLY WITH THE FOLLOWING:

CLASS	28 DAY STRENGTH	COARSE AGGR.	SLUMP	AGG SIZE	USAGE
A	3000	C33	5"-7"	1.5"	FOOTINGS
B	4000	C33	3"-5"	1"	SLAB-ON-GRADE,
C	4000	C33	3"-5"	1"	COLUMNS, FORMED SLABS

4. PROVIDE THE FOLLOWING ADDITIONAL CHARACTERISTICS FOR MIXES IN EXPOSED PLAZA DECKS AND POOL STRUCTURES.

   CONCRETE EXPOSED TO FREEZE/THAW IN MOIST CONDITIONS SHALL HAVE A MINIMUM F'c OF 4500 PSI PER ACI 318, TABLE 4.2.2

   A. HIGH RANGE WATER REDUCER
   B. MAXIMUM WATER/CEMENT RATIO OF 0.45
   C. AIR CONTENT OF 5% TO 7%
   D. MAXIMUM AGGREGATE SIZE OF 3/4"
   E. ADMIXTURES WITH NO CHLORIDES
5. JOINTS NOT SHOWN SHALL BE MADE AND LOCATED TO LEAST IMPAIR STRENGTH AND APPEARANCE OF STRUCTURE, AS APPROVED. NO HORIZONTAL JOINTS SHALL BE PERMITTED IN CONCRETE EXCEPT WHERE THEY NORMALLY OCCUR OR WHERE NOTED. VERTICAL JOINTS SHALL OCCUR NEAR CENTERS OF SPANS AT LOCATIONS APPROVED.
6. JOINTS BETWEEN PIERS AND PIER CAPS, FOOTINGS AND WALLS OR COLUMNS BE PREPARED BY ROUGHENING THE SURFACE OF THE CONCRETE IN AN APPROVED MANNER SO THAT THE AGGREGATE SHALL BE EXPOSED UNIFORMLY LEAVING NO LATINATE, LOOSENED PARTICLES OR DAMAGED CONCRETE.
7. U.N.O., OR AS INDICATED ON ARCHITECTURAL DRAWINGS, PROVIDE CHAMFERS AT EXPOSED EDGES OF CONCRETE.
8. ALL SLEEVES, INSERTS, ANCHORS, AND EMBEDDED ITEMS REQUIRED FOR ADJOINING WORK SHALL BE VERIFIED BY CONTRACTOR AND SHALL BE IN PLACE PRIOR TO CONCRETING.

EXPANSION BOLTS

1. EXPANSION BOLTS SHALL BE ONE OF THE FOLLOWING:
   A. KWIK BOLT BY HILTI FASTENING SYSTEMS
   B. WEJ-IT ANCHOR BOLT BY WEJ-IT CORPORATION
2. EXPANSION BOLTS SHALL BE INSTALLED IN ACCORDANCE WITH THE RECOMMENDATIONS OF THE MANUFACTURER AND THE FOLLOWING:
   A. DRILL HOLES PERPENDICULAR TO FACE OF CONCRETE.
   B. HOLES SHALL BE SAME NOMINAL DIAMETER AS BOLT. DO NOT ENLARGE HOLE DIAMETER DURING DRILLING PROCESS.
3. PRIOR TO DRILLING, LOCATE EXISTING REINFORCING STEEL IN CONCRETE. POSITION BOLTS TO NOT CONFLICT WITH REINFORCING. WHERE BOLTS MUST BE RELOCATED MORE THAN 1 1/2 INCHES FROM THEORETICAL LOCATION, NOTIFY THE ARCHITECT. ADJUST SIZES OF CONNECTION MATERIALS TO ALLOW FOR REPOSITIONED BOLTS.
4. HOLES IN CONNECTION PLATES MAY BE OVERSIZED PROVIDED WELDED PLATE WASHERS WITH PROPER HOLE DIAMETERS ARE PROVIDED. WELDS SHALL DEVELOP FULL CAPACITY OF BOLT.

STRUCTURAL MASONRY

1. MATERIALS SHALL COMPLY WITH THE FOLLOWING:
   A. HOLLOW MASONRY UNITS - ASTM C90, LIGHTWEIGHT, TYPE NI, MINIMUM COMPRESSIVE STRENGTH OF 2500 ON NET AREA.
   B. MORTAR - ASTM C 270, TYPE S, WITH MINIMUM COMPRESSIVE STRENGTH OF 1800 PSI.
   C. COARSE GROUT - ASTM C 476, WITH MINIMUM COMPRESSIVE STRENGTH OF 2500 PSI, MAXIMUM AGGREGATE SIZE OF 1/2 INCH.
   D. Z TIES - 3/16 INCH DIAMETER, ASTM A 82, GALVANIZED.
2. MASONRY DESIGN BASED ON PRISM STRENGTH OF F'M = 2500 PSI.
3. WALL VERTICAL REINFORCING SHALL BE AS FOLLOWS:
   A. SEE TYPICAL DETAILS SHEET S4.01
   B. 2-#5 VERTICAL FULL HEIGHT EACH SIDE OF OPENINGS.
   C. 2-#5 VERTICAL FULL HEIGHT AT CORNERS AND ENDS OF WALLS.
   D. VERTICAL BARS SHALL BE CENTERED IN CELLS.
   E. BAR LAP SPLICES SHALL BE 60 BAR DIAMETERS, MINIMUM.
   F. SPLICES SHALL BE STAGGERED WITH NO MORE THAN HALF OF BARS LAPPED WITHIN LENGTH OF LAPS.
4. WALL HORIZONTAL REINFORCING SHALL BE AS FOLLOWS:
   A. PLACED CONTINUOUSLY IN BOND BEAMS AND GROUTED SOLIDLY IN PLACE.
   B. LAP SPLICES SHALL BE 60 BAR DIAMETERS, MINIMUM.
   C. LAP SPLICES SHALL HAVE BARS TIED TOGETHER.
5. JOINT REINFORCING SHALL BE AS FOLLOWS:
   A. EXTRA HEAVY DUTY FOR 12" WALLS "DUR-O-WALL", TRUSS TYPE, AT 16 INCHES ON CENTER, UNLESS NOTED OTHERWISE.
   B. PROVIDE TWO HORIZONTAL WIRES IN BLOCK MYTHES.
   C. LAP SPLICES SHALL BE 14 INCHES MINIMUM WITH HORIZONTAL WIRES LAPPED SIDE BY SIDE.
6. TIES FOR MASONRY PILASTERS AND BEAMS SHALL BE AS FOLLOWS:
   A. Z TIES SHALL HAVE 2 INCH LONG 90 DEGREE HOOKS EACH END.
   B. PLACE Z TIES AT 16 INCHES ON CENTER IN VERTICAL BRICK SURFACES.
   C. PLACE Z TIES AT 8 INCHES ON CENTER IN HORIZONTAL BRICK SURFACES USED FOR BEAM SOFFITS. HOOK TIES AROUND 1/4 INCH DIAMETER GALVANIZED RODS PLACED IN HOLES IN BRICK. Z TIES SHALL BE 6 INCHES LONG, MINIMUM.
7. PROVIDE 1" CLEAR COVER BETWEEN TIES OR LONGITUDINAL REINFORCING AND INSIDE FACE OF MASONRY AT GROUTED BEAMS, COLUMNS, AND PILASTERS.
8. PLACE INSULATION, AS SPECIFIED, IN THE CAVITY IN 16" STRIPS BETWEEN JOINT REINFORCEMENT. INSULATION SHALL NOT EXTEND INTO GROUTED PILASTER OR BOND BEAM SECTIONS.
9. SPACE NON-DIMENSIONED WALL PILASTER EQUALLY BETWEEN THOSE DIMENSIONED, WITHOUT EXCEEDING 12'-0" ON CENTER.
10. ADJUSTABLE JOINT REINFORCING SHALL NOT BE USED IN CAVITY WALLS.

STRUCTURAL STEEL

1. ALL STRUCTURAL STEEL ROLLED SHAPES SHALL CONFORM TO THE FOLLOWING:

W AND WT SHAPES:	ASTM A572, GRADE 50, WITH SPECIAL REQUIREMENTS PER AISC TECHNICAL BULLETIN #3 DATED MARCH 1997, UNLESS NOTED OTHERWISE. ASTM A36, WHERE NOTED
CHANNELS, ANGLES, M AND S SHAPES:	ASTM A36, EXCEPT WHERE NOTED.

2. PLATES SHALL BE ASTM A36 EXCEPT PLATES USED IN MOMENT CONNECTIONS AND AS STIFFENERS SHALL BE THE SAME MATERIAL AND GRADE AS THE MEMBERS CONNECTED TO THE PLATES.
3. ALL STRUCTURAL STEEL PIPE SHALL CONFORM TO ASTM A-501 OR A-53.
4. ALL STRUCTURAL STEEL TUBING SHALL CONFORM TO ASTM A-500, GRADE B.
5. ANCHOR RODS (ANCHOR BOLTS) SHALL BE GRADE 36, UNLESS INDICATED OTHERWISE.
6. SHEAR CONNECTORS SHALL BE HEADED STUDS, SIZE AS INDICATED, COMPLYING WITH ASTM A108.
7. FABRICATION OF STRUCTURAL STEEL SHALL BE PER AISC SPECIFICATIONS FOR THE DESIGN, FABRICATION AND ERECTION OF STRUCTURAL STEEL FOR BUILDINGS.
8. REFER TO ARCHITECTURAL DRAWINGS FOR MISCELLANEOUS METALS NOT SHOWN ON STRUCTURAL DRAWINGS.
9. SPLICING OF STRUCTURAL STEEL MEMBERS WHERE NOT DETAILED IS PROHIBITED WITHOUT PRIOR APPROVAL.
10. ALL STEEL BEAMS SHALL BE ERECTED WITH CAMBER AS INDICATED ON DRAWINGS. ALL BEAMS SHALL BE ERECTED WITH NATURAL CAMBER UP.
11. SHORING OF GRAVITY LOADS FOR COMPOSITE STEEL BEAMS IS NOT PERMITTED UNLESS INDICATED ON THE PLANS OR WITH PRIOR APPROVAL.
12. STEEL SHELF ANGLES FOR MASONRY SHALL COMPLY WITH THE FOLLOWING:
   A. CONTINUOUS WITH 1/4 INCH JOINTS AT MAXIMUM SPACING OF 20 FEET.
   B. JOINTS SHALL BE PLACED AT MIDPOINT BETWEEN SUPPORTS.
   C. DISCONTINUOUS AT CORNERS WITH ONE HORIZONTAL LEG EXTENDED. PROVIDE 1/4 INCH GAP AT ADJACENT ANGLE.
   D. HOT DIPPED GALVANIZED.

METAL ROOF DECK

1. STEEL ROOF DECK SHALL BE VULCRAFT OR EQUAL, 3 INCH, 18 GAUGE, TYPE 3NIA (ACOUSTIC), PHOSPHATIZED/PAINTED. SHEET STEEL SHALL BE PER ASTM A611.
2. EREGT METAL ROOF DECK PER MANUFACTURER'S RECOMMENDATIONS. PLACE DECK IN THREE SPAN LENGTHS.
3. DECK CONNECTIONS SHALL COMPLY WITH THE FOLLOWING, UNLESS OTHERWISE INDICATED ON PLAN:
   A. AT EACH SUPPORT - PUDDLE WELDS AT 18 INCHES ON CENTER.
   B. AT SIDE LAPS - SCREWS MIDWAY BETWEEN SUPPORTS.
   C. EDGE PARALLEL TO DECK - PUDDLE WELDS AT 12 INCHES ON CENTER.
   D. SCREWS - #12 - 14X3/4" HWH #2 BY TEKS
   E. PUDDLE WELDS - FULL FUSION 5/8" DIAMETER. DECK METAL FULLY INTACT AFTER WELDING.
4. ROOF DECK SHALL NOT SUPPORT SUSPENDED CEILINGS, FIXTURES, DUCTS, OR OTHER SYSTEMS.
5. JOISTS AND JOIST GIRDERS SHALL RECEIVE SHOP PRIMER, RED OXIDE.

ISSUE DATE
FEBRUARY 20, 2002

REVISIONS

ADDISON ATHLETIC CLUB EXPANSION AND LEISURE POOL
ADDISON, TEXAS

RON HOBBS ARCHITECTS
614 W. MAIN ST. SUITE #200 GARLAND, TEXAS 75040
(972) 494-0174 FAX (972) 494-0722

Lee & Baldauf
Consulting Engineers Inc.
12880 Pandora Drive
Dallas, Texas 75238
214-342-0399 Fax 214-342-2600

2-20-02

JOB NUMBER
0012

JOB NAME
ADDISON ATHELTIC CLUB EXPANSION & LEISURE POOL

SHEET DESCRIPTION
GENERAL NOTES

SHEET NUMBER
S1.01

2001010-00 02-20-02

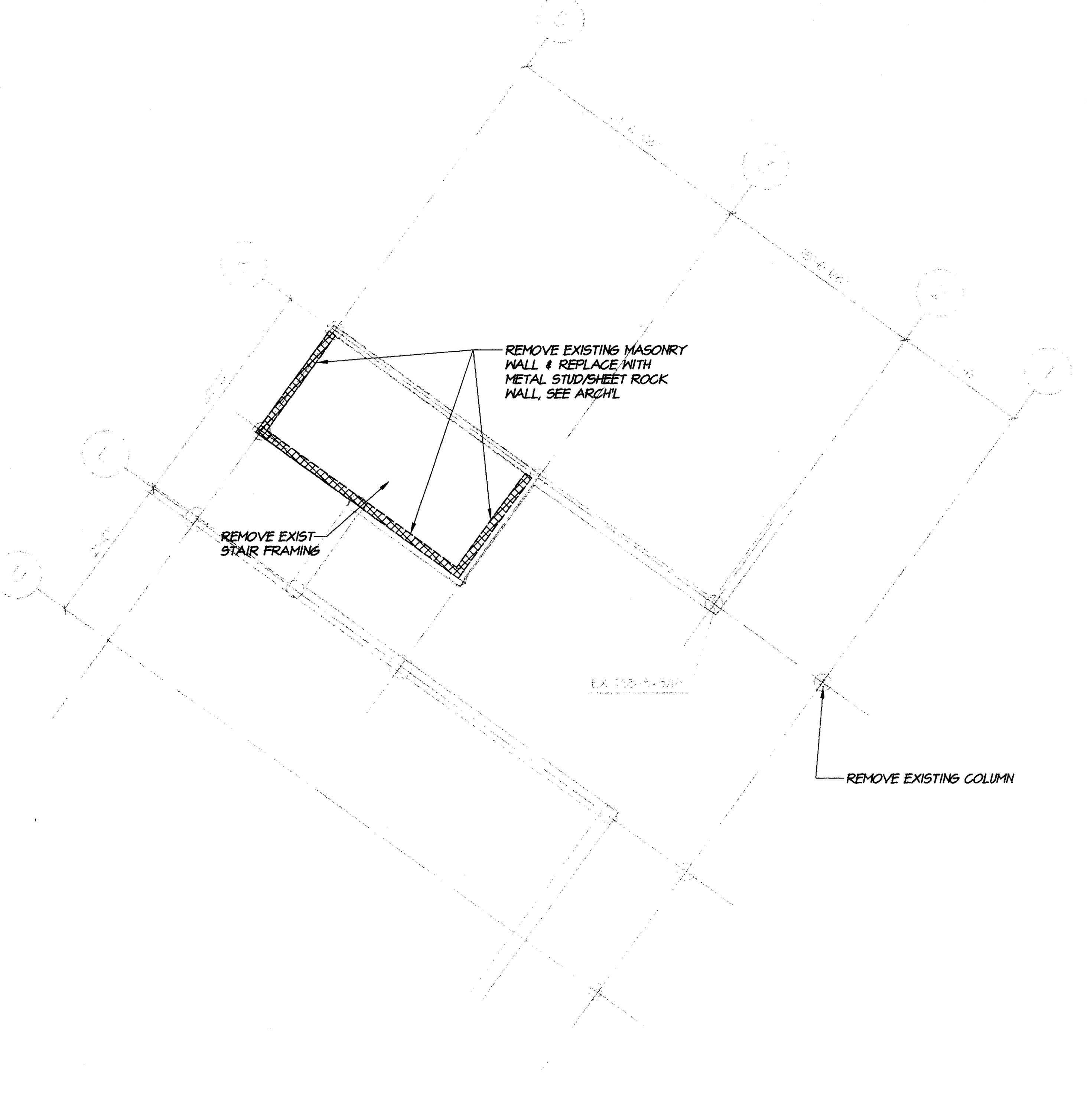

01 EXISTING FOUNDATION PLAN
S2.00 1/8"=1'-0"

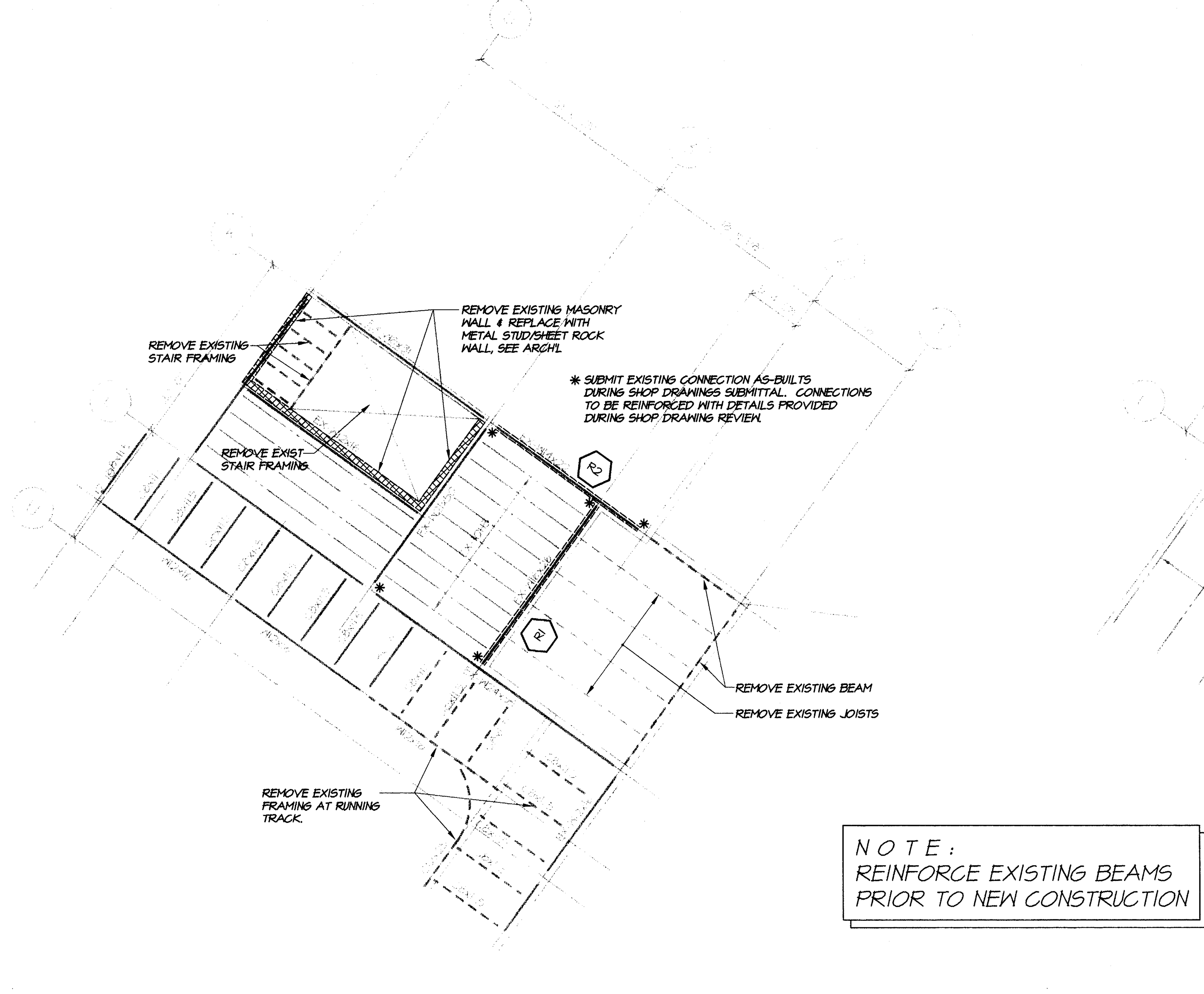

NOTE:
REINFORCE EXISTING BEAMS PRIOR TO NEW CONSTRUCTION

02 EXISTING SECOND FLOOR PLAN
S2.00 1/8"=1'-0"

03 EXISTING ROOF FRAMING PLAN
S2.00 1/8"=1'-0"

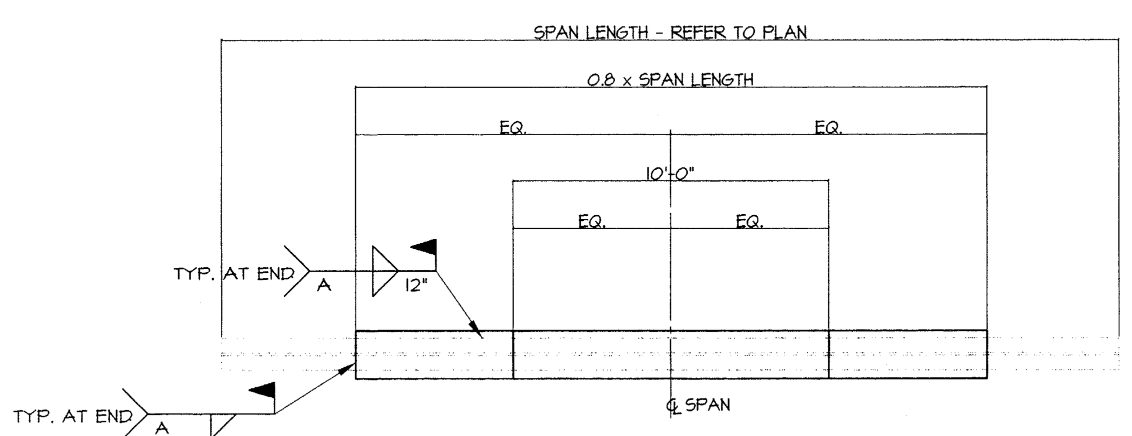

SCHEDULE for COVER PLATE or WT						
MARK	TYPE	SIZE	WELD			REMARK
		CP: t x W or WT: d x Wt.	A (in.)	B (in.)	C (in.)	
R1	WT	5 x 11	1/8	4	12	
R2	WT	4 x 14	1/4	4	12	
R3	WT	8 x 20	3/8	4	12	
R4	WT	6 x 17.5				

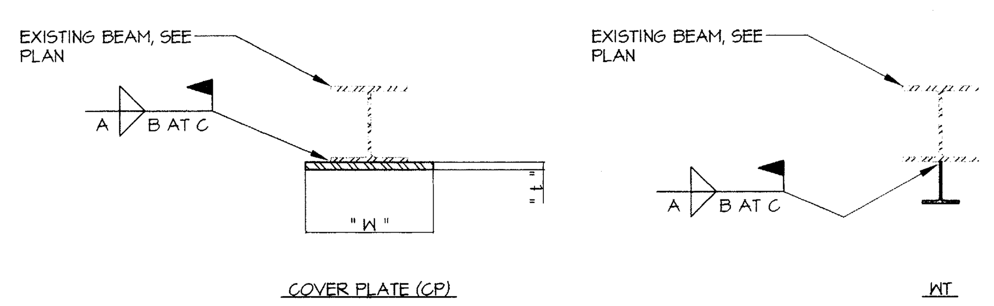

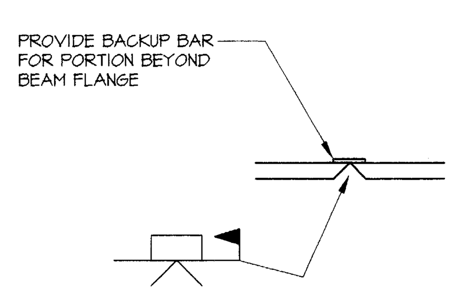

WELD NOTES:

1. FULL PENETRATION WELD IN COVER PLATE.
2. FULL PENETRATION WELD IN FLANGE AND WEB OF "WT".

FIELD SPLICE

REINFORCING of EXISTING BEAMS

04 TYPICAL DETAIL
S2.00

200010-00 02-20-02

DRAWING INDEX	
GENERAL NOTES	S1.01
DEMO PLAN	S2.00
TYPICAL FOUNDATION DETAILS	S3.01
PIER SCHEDULE	S3.01
TYPICAL POOL DETAILS	S3.02
TYPICAL CMU DETAILS	S4.01
TYPICAL FLOOR DETAILS	S5.01
TYPICAL ROOF DETAILS	S6.01

ISSUE DATE
FEBRUARY 20, 2002

REVISIONS

ADDISON ATHLETIC CLUB EXPANSION AND LEISURE POOL
ADDISON, TEXAS

RON HOBBS ARCHITECTS
614 W. MAIN ST. SUITE #200 GARLAND, TEXAS 75040
(972) 494-0174 FAX (972) 494-0722

Lee & Baldauf
Consulting Engineers Inc.
12980 Pandora Drive
Dallas, Texas 75238
214-342-0399 Fax 214-342-2600

2-20-02

JOB NUMBER
0012
JOB NAME
ADDISON ATHLETIC CLUB EXPANSION & LEISURE POOL

SHEET DESCRIPTION
DEMO PLAN
SHEET NUMBER
S2.00

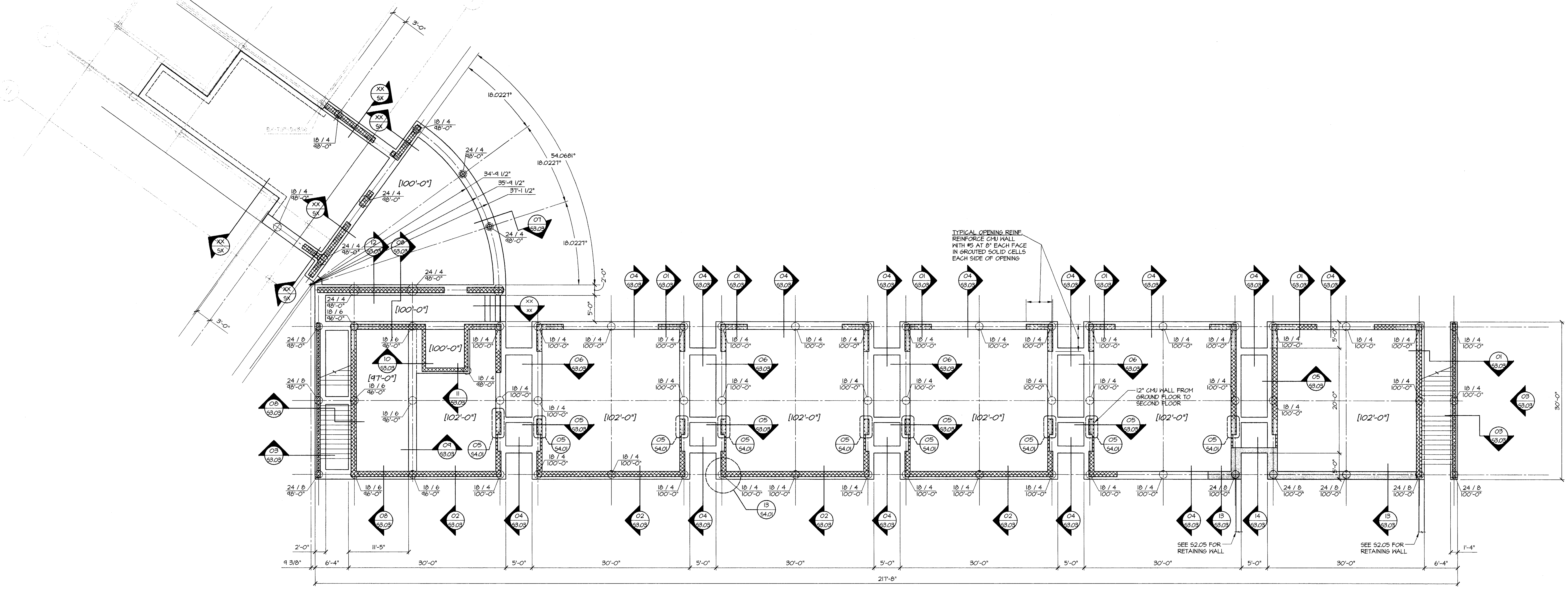

01 / S2.01 FOUNDATION PLAN

1/8"=1'-0"

NORTH

PLAN NOTES:

1. TOP OF SLAB ELEVATION = 100'-0" (DATUM = 605.50') TYPICAL, U.N.O. DIFFERENT FLOOR ELEVATIONS ARE SHOWN ON PLAN THUS [XXX'-XX"]
2. PIERS SHALL BE LOCATED AT INTERSECTION OF GRIDS, U.N.O.. WHERE PIERS ARE SHOWN AWAY FROM GRIDS, LOCATE PIERS AT CENTERLINE OF GRADE BEAMS.
3. NOTE SPECIAL DOWEL REQUIREMENTS FOR SECTION 13/S3.03.

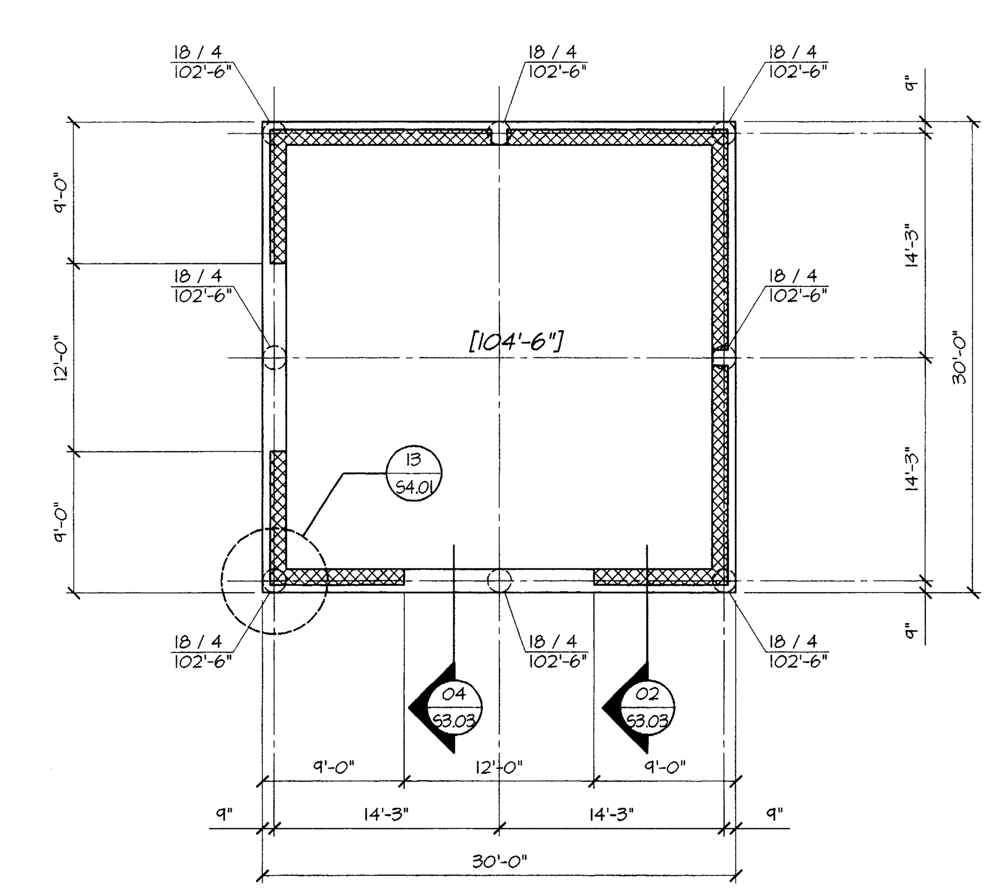

NORTH PAVILLION

02 / S2.01 FOUNDATION PLAN

1/8"=1'-0"

NORTH

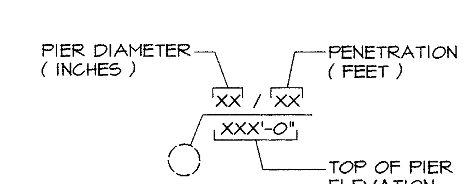

PIER LEGEND

DRAWING INDEX	
GENERAL NOTES	S1.01
DEMO PLAN	S2.00
TYPICAL FOUNDATION DETAILS	S3.01
PIER SCHEDULE	S3.01
TYPICAL POOL DETAILS	S3.02
TYPICAL CMU DETAILS	S4.01
TYPICAL FLOOR DETAILS	S5.01
TYPICAL ROOF DETAILS	S6.01

ISSUE DATE
FEBRUARY 20, 2002

REVISIONS

ADDISON ATHLETIC CLUB EXPANSION AND LEISURE POOL

ADDISON, TEXAS

RON HOBBS ARCHITECTS
614 W. MAIN ST. SUITE #200 GARLAND, TEXAS 75040
(972) 494-0174 FAX (972) 494-0722

Lee & Baldauf
Consulting Engineers Inc.
12980 Pandora Drive
Dallas, Texas 75238
214-342-0399 Fax 214-342-2600

2-20-02

JOB NUMBER
0012

JOB NAME
ADDISON ATHELTIC CLUB EXPANSION & LEISURE POOL

SHEET DESCRIPTION
FOUNDATION PLAN

SHEET NUMBER
S2.01

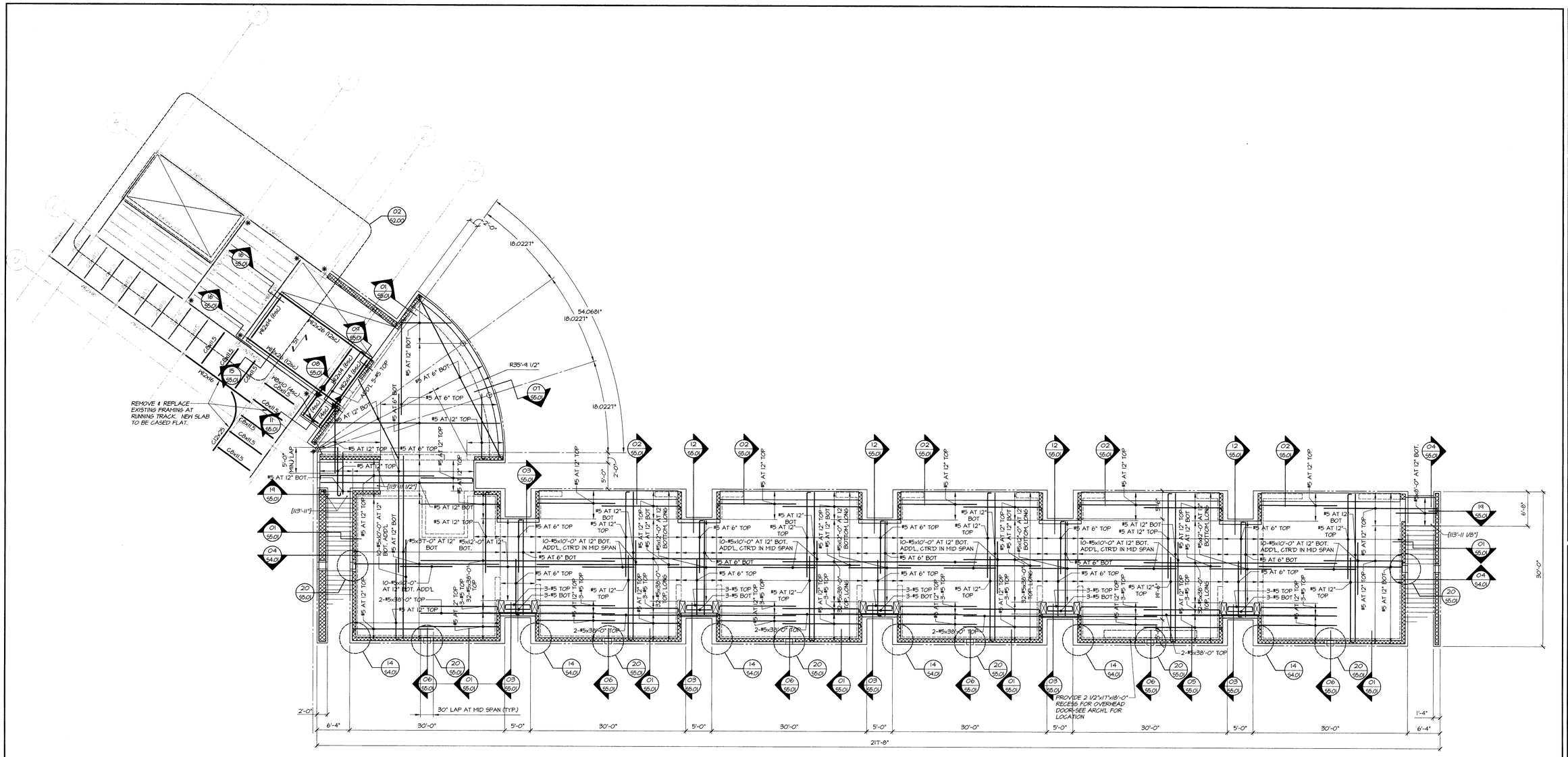

PLAN NORTH

01 / S2.02 SECOND FLOOR FRAMING PLAN

1/8"=1'-0"

PLAN NOTES:

1. TOP OF SLAB ELEVATION = 114'-0" TYPICAL U.N.O..
2. "S1" INDICATES 3"-18 GAUGE COMPOSITE METAL DECK + 3 1/4" LIGHT WEIGHT CONCRETE SLAB. REINFORCE PER GENERAL NOTES.
3. SEE SHEET S1.01 FOR GENERAL NOTES.
4. ▶ INDICATES MOMENT CONNECTION.

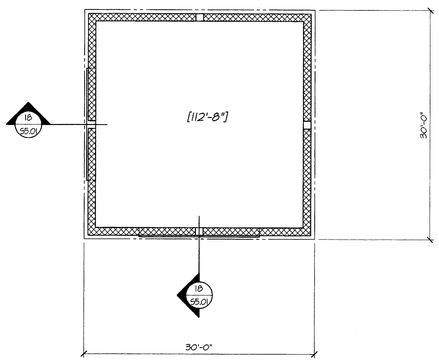

NORTH PAVILLION

02 / S2.02 INTERMEDIATE FRAMING PLAN

1/8"=1'-0"

NORTH

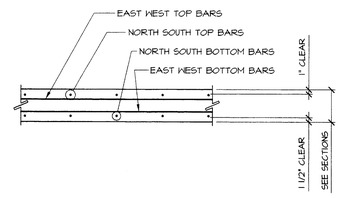

TYPICAL BAR PLACEMENT

DRAWING INDEX	
GENERAL NOTES	S1.01
DEMO PLAN	S2.00
TYPICAL FOUNDATION DETAILS	S3.01
PIER SCHEDULE	S3.01
TYPICAL POOL DETAILS	S3.02
TYPICAL CMU DETAILS	S4.01
TYPICAL FLOOR DETAILS	S5.01
TYPICAL ROOF DETAILS	S6.01

ISSUE DATE
FEBRUARY 20, 2002

REVISIONS

ADDISON ATHLETIC CLUB EXPANSION AND LEISURE POOL
ADDISON, TEXAS

RON HOBBS ARCHITECTS
614 W. MAIN ST. SUITE #200 GARLAND, TEXAS 75040
(972) 494-0174 FAX (972) 494-0722

Lee & Baldauf
Consulting Engineers Inc.
12980 Pandora Drive
Dallas, Texas 75238
214-342-0399 Fax 214-342-2600

2-20-02

JOB NUMBER
0012

JOB NAME
ADDISON ATHLETIC CLUB EXPANSION & LEISURE POOL

SHEET DESCRIPTION
SECOND FLOOR FRAMING PLAN

SHEET NUMBER
S2.02

2001070-00 02-20-02

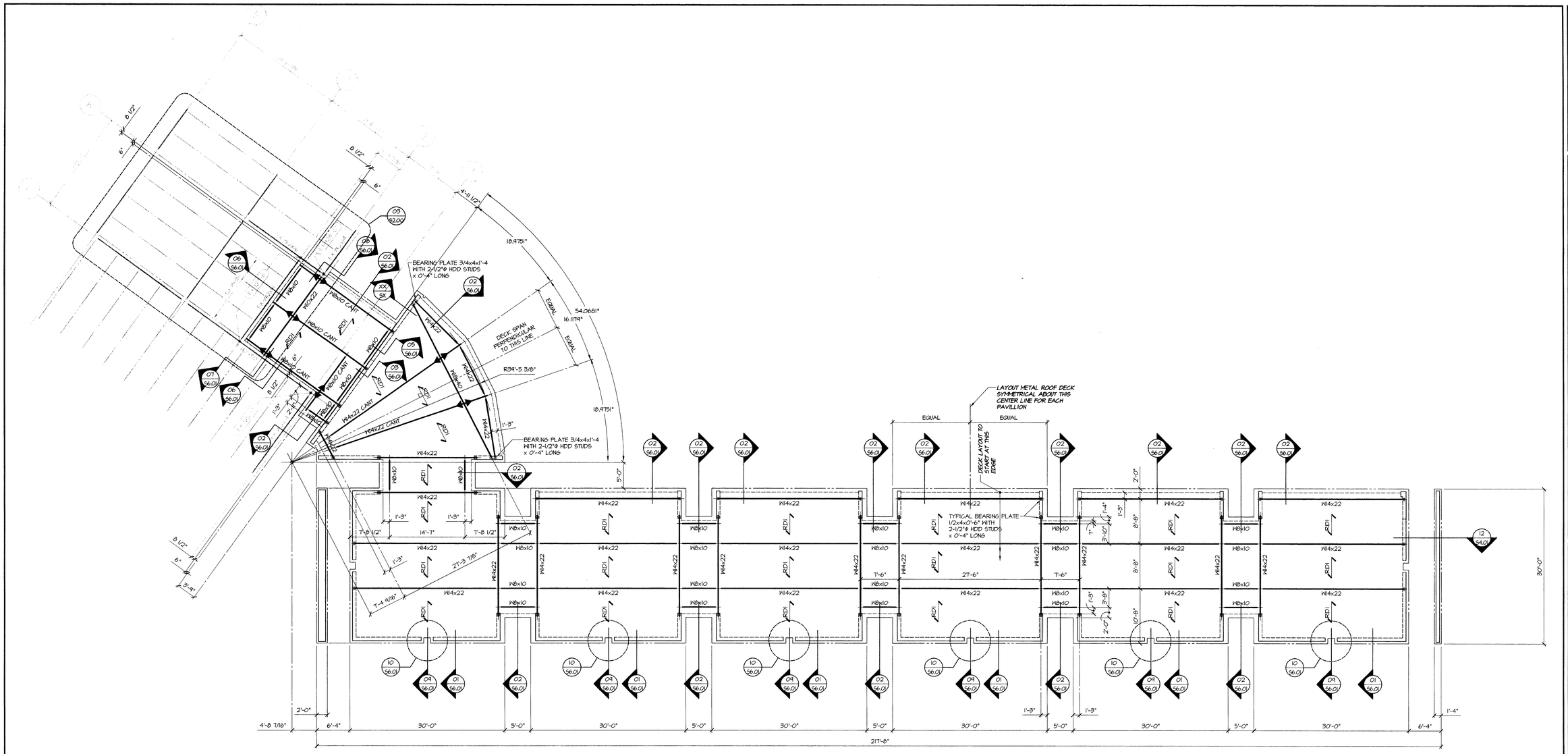

PLAN NORTH

01 / S2.03 ROOF FRAMING PLAN

1/8"=1'-0"

PLAN NOTES:

1. RDI - VULCRAFT 3" DEEP (9N1A) ACOUSTIC DECK 22 GAUGE MINIMUM 3 SPANS CONTINUOUS.
2. TOP OF STEEL / BOTTOM OF METAL DECK EL.=129'-4 3/8" TYPICAL, U.N.O.
3. SEE SHEET S1.01 FOR GENERAL NOTES.
4. ▶ INDICATES MOMENT CONNECTION.

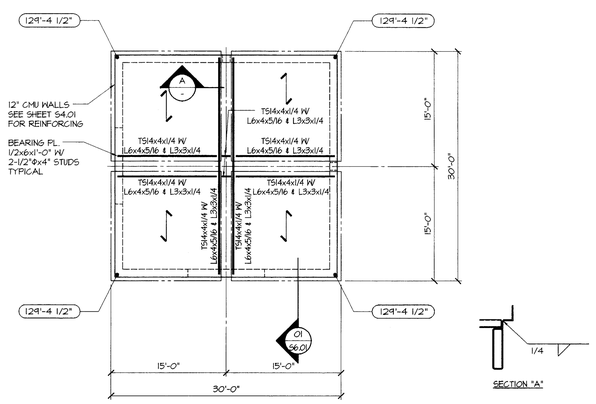

SECTION "A"

NORTH PAVILLION

02 / S2.03 ROOF FRAMING PLAN

1/8"=1'-0"

NORTH

DRAWING INDEX	
GENERAL NOTES	S1.01
DEMO PLAN	S2.00
TYPICAL FOUNDATION DETAILS	S3.01
PIER SCHEDULE	S3.01
TYPICAL POOL DETAILS	S3.02
TYPICAL CMU DETAILS	S4.01
TYPICAL FLOOR DETAILS	S5.01
TYPICAL ROOF DETAILS	S6.01

ISSUE DATE
FEBRUARY 20, 2002

REVISIONS

ADDISON ATHLETIC CLUB EXPANSION AND LEISURE POOL
ADDISON, TEXAS

RON HOBBS ARCHITECTS
614 W. MAIN ST. SUITE #200 GARLAND, TEXAS 75040
(972) 494-0174 FAX (972) 494-0722

Lee & Baldauf Consulting Engineers Inc.
Dallas, Texas 75238
214-342-0399 Fax 214-342-2600

STATE OF TEXAS
HARRY A. LEE
52405
REGISTERED
PROFESSIONAL ENGINEER
2-20-02

JOB NUMBER
0012
JOB NAME
ADDISON ATHELTIC CLUB EXPANSION & LEISURE POOL

SHEET DESCRIPTION
ROOF FRAMING PLAN
SHEET NUMBER
S2.03

02-20-02
2001010-00

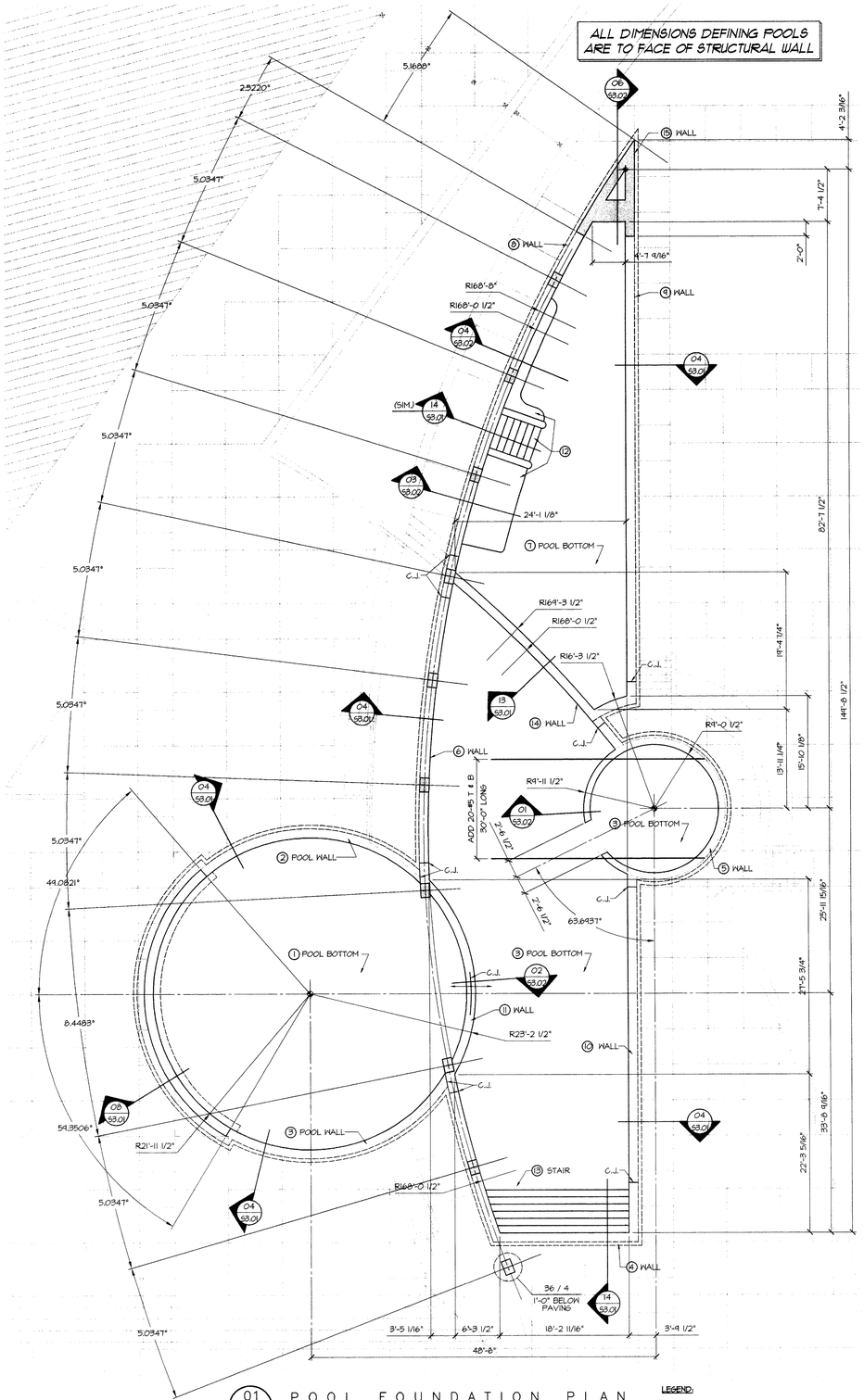

01 S2.04 POOL FOUNDATION PLAN
1/8"=1'-0"

LEGEND:
① = POUR SEQUENCE
C.J. = CONTROL JOINT

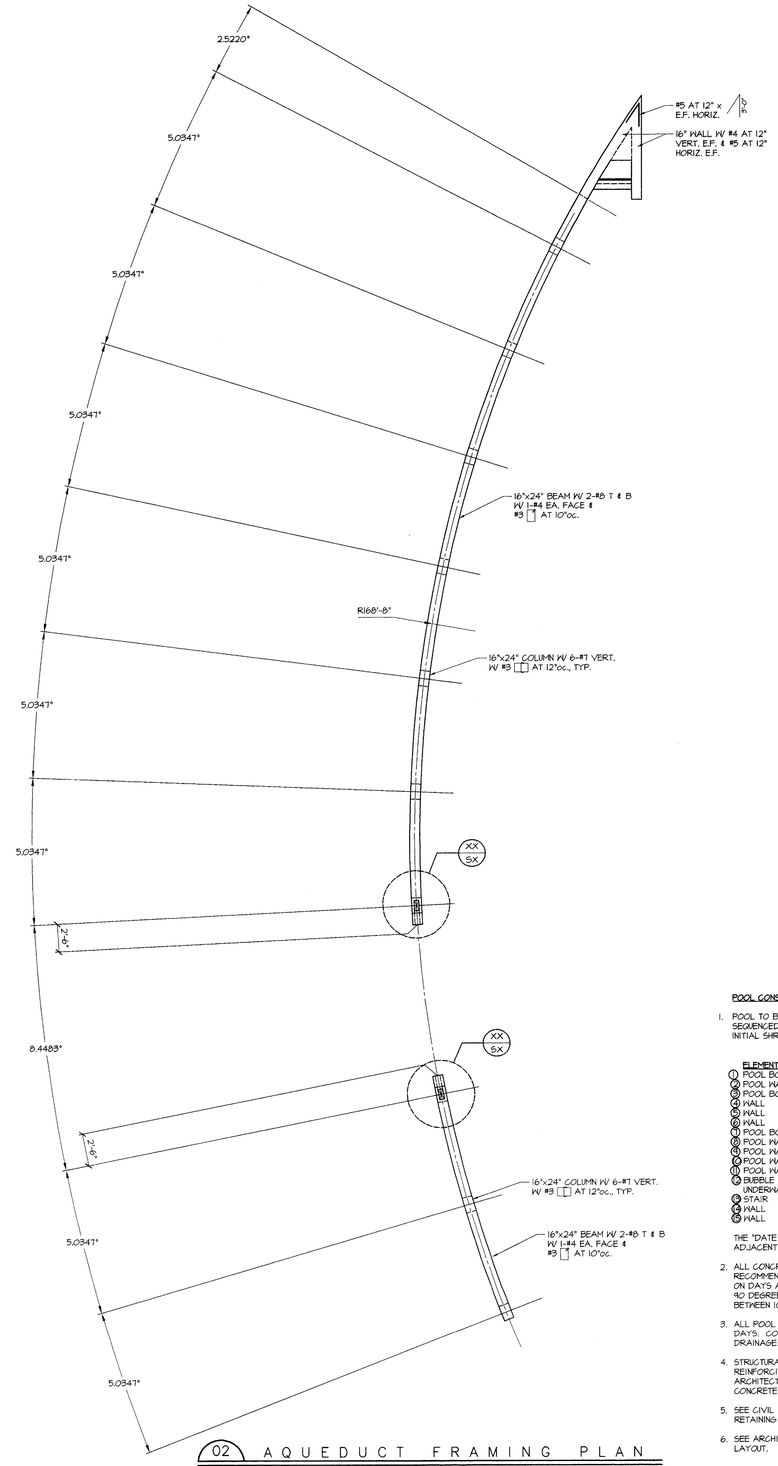

02 S2.04 AQUEDUCT FRAMING PLAN
1/8"=1'-0"

POOL CONSTRUCTION GENERAL NOTES

1. POOL TO BE CONSTRICTED IN INDIVIDUAL POURS THAT ARE SEQUENCED WITH ADEQUATE TIME FOR CONCRETE TO CURE AND INITIAL SHRINKAGE TO TAKE PLACE.

ELEMENT	DATE CAST (DAYS)
1 POOL BOTTOM	1
2 POOL WALL	2
3 POOL BOTTOM	30
4 WALL	32
5 WALL	32
6 WALL	32
7 POOL BOTTOM	60
8 POOL WALL	62
9 POOL WALL	62
10 POOL WALL	62
11 POOL WALL	62
12 BUBBLE COUCH STAIR, UNDERWATER BENCH	62
13 STAIR	62
14 WALL	90
15 WALL	90

THE "DATE CAST" IS THE MINIMUM PERIOD OF TIME SEPARATING ADJACENT POURS.

2. ALL CONCRETE PLACED SHALL FOLLOW HOT & COLD WEATHER RECOMMENDED PRACTICES. IN ADDITION, ANY CONCRETE POURED ON DAYS ANTICIPATED TO HAVE A DAILY HIGH TEMPERATURE OF 90 DEGREES OR WIND SPEEDS EXCEEDING 15 MPH, SHALL BE CAST BETWEEN 10 P.M. AND 3 A.M.

3. ALL POOL CONCRETE TO BE CONTINUOUSLY WET CURED FOR 28 DAYS. CONTRACTOR TO PROVIDE ADEQUATE MEANS OF DRAINAGE.

4. STRUCTURAL DRAWINGS PRIMARY PURPOSE IS TO INDICATE REINFORCING REQUIRED. COORDINATE WILL POOL AND ARCHITECTURAL DRAWINGS FOR ALL EMBEDDED ITEMS AND CONCRETE PROFILES.

5. SEE CIVIL DRAWINGS FOR ALL SITE PAVING, STAIRS, AND RETAINING WALLS NOT SPECIFICALLY DETAILED ON STRUCTURAL.

6. SEE ARCHITECTURAL DRAWINGS FOR PAVING AND RETAINING WALL LAYOUT.

DRAWING INDEX

GENERAL NOTES	S1.01
DEMO PLAN	S2.00
TYPICAL FOUNDATION DETAILS	S3.01
PIER SCHEDULE	S3.01
TYPICAL POOL DETAILS	S3.02
TYPICAL CMU DETAILS	S4.01
TYPICAL FLOOR DETAILS	S5.01
TYPICAL ROOF DETAILS	S6.01

ISSUE DATE
FEBRUARY 20, 2002

REVISIONS

ADDISON ATHLETIC CLUB EXPANSION AND LEISURE POOL
ADDISON, TEXAS

RON HOBBS ARCHITECTS
614 W. MAIN ST. SUITE #200 GARLAND, TEXAS 75040
(972) 494-0174 FAX (972) 494-0722

Lee & Baldauf Consulting Engineers Inc.
12880 Pandora Drive
Dallas, Texas 75240
214-342-0399 Fax 214-342-2600

2-20-02

JOB NUMBER
0012

JOB NAME
ADDISON ATHLETIC CLUB EXPANSION & LEISURE POOL

SHEET DESCRIPTION
POOL & AQUEDUCT PLAN

SHEET NUMBER
S2.04

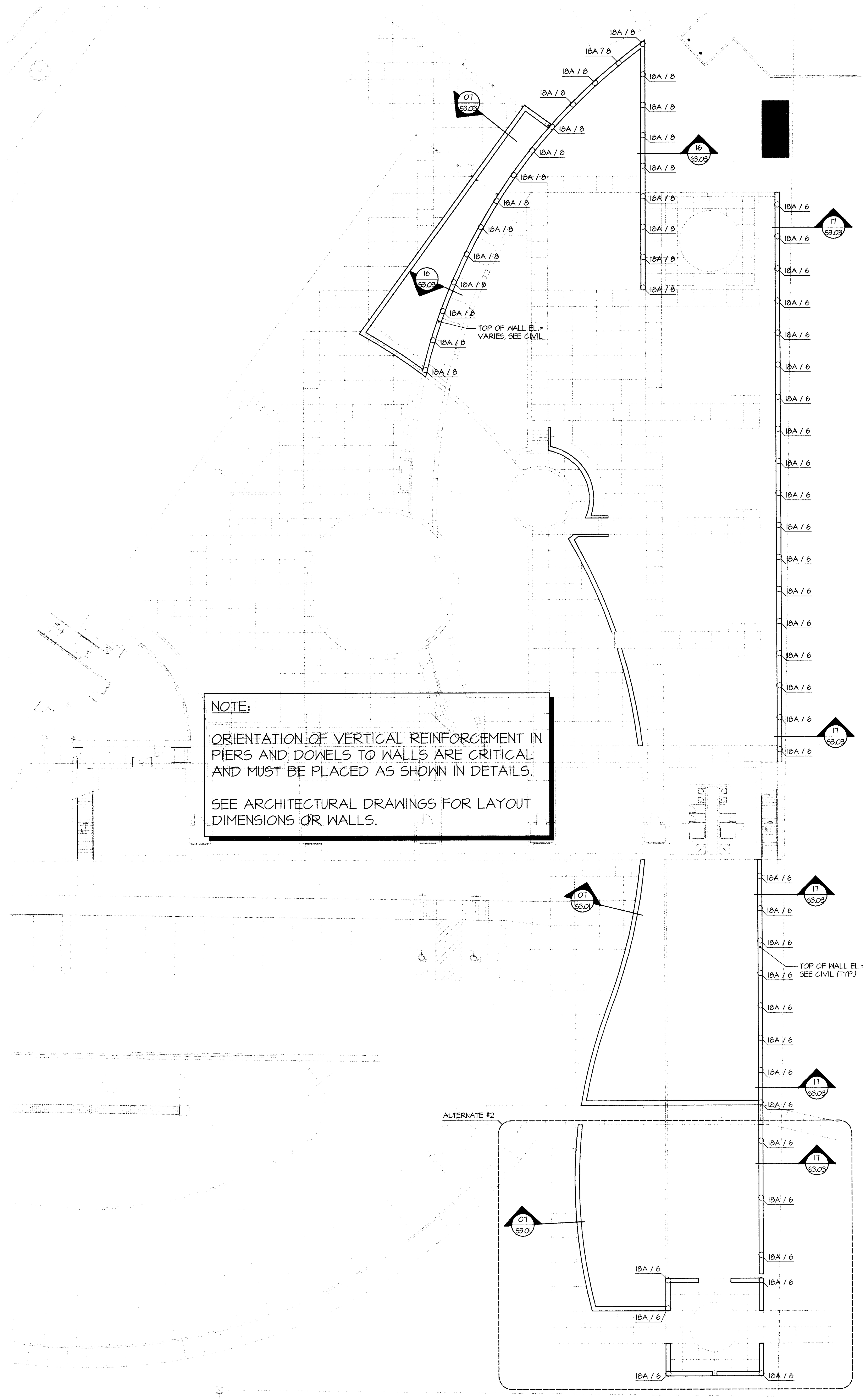

NOTE:

ORIENTATION OF VERTICAL REINFORCEMENT IN PIERS AND DOWELS TO WALLS ARE CRITICAL AND MUST BE PLACED AS SHOWN IN DETAILS.

SEE ARCHITECTURAL DRAWINGS FOR LAYOUT DIMENSIONS OR WALLS.

01 / S2.05 RETAINING WALL PLAN

1/16"=1'-0"

DRAWING INDEX	
GENERAL NOTES	S1.01
DEMO PLAN	S2.00
TYPICAL FOUNDATION DETAILS	S3.01
PIER SCHEDULE	S3.01
TYPICAL POOL DETAILS	S3.02
TYPICAL CMU DETAILS	S4.01
TYPICAL FLOOR DETAILS	S5.01
TYPICAL ROOF DETAILS	S6.01

ISSUE DATE
FEBRUARY 20, 2002

REVISIONS

ADDISON ATHLETIC CLUB EXPANSION
AND
LEISURE POOL
ADDISON, TEXAS

RON HOBBS ARCHITECTS
614 W. MAIN ST. SUITE #200 GARLAND, TEXAS 75040
(972) 494-0174 FAX (972) 494-0722

Lee & Baldauf
Consulting Engineers Inc.
12980 Pandora Drive
Dallas, Texas 75238
214-342-0399 Fax 214-342-2600

2-20-02

JOB NUMBER
0012

JOB NAME
ADDISON ATHLETIC CLUB EXPANSION & LEISURE POOL

SHEET DESCRIPTION
RETAINING WALLS PLAN

SHEET NUMBER
S2.05

2001/10-00 02-20-02

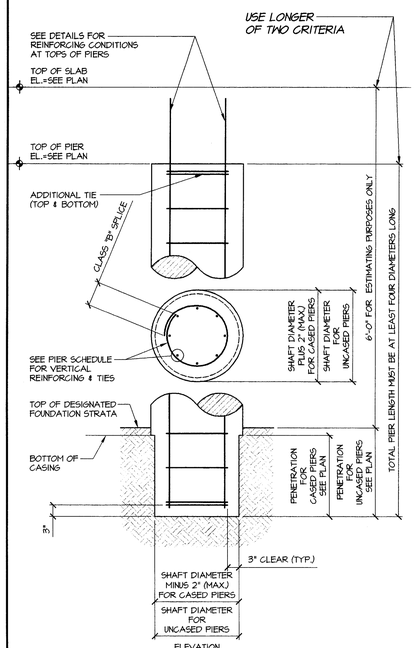

ELEVATION

SCHEDULE			
SHAFT DIAMETER (IN.)	REINFORCING		REMARKS
	VERTICALS	TIES	
18	6-#5	#3 AT 12"	
18A	4-#4	#4 AT 6"	BAR ORIENTATION CRITICAL SEE DETAILS
24	8-#8	#3 AT 12"	
30	8-#9	#3 AT 12"	
36	10-#9	#4 AT 12"	

STRAIGHT SHAFT PIER

06 / S3.01 TYPICAL DETAIL
NONE

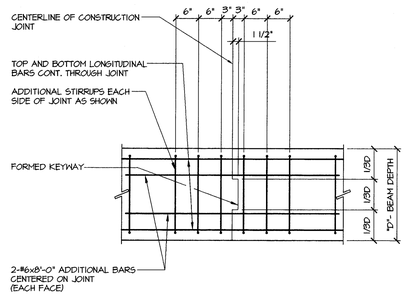

CONCRETE BEAM CONSTRUCTION JOINT

01 / S3.01 TYPICAL DETAIL

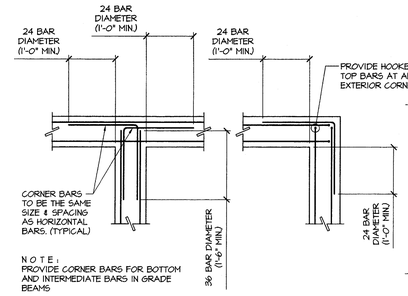

ADDITIONAL CORNER BARS at GRADE BEAMS and WALLS

02 / S3.01 TYPICAL DETAIL

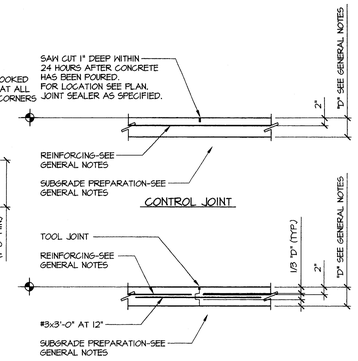

CONSTRUCTION JOINT

03 / S3.01 TYPICAL DETAIL

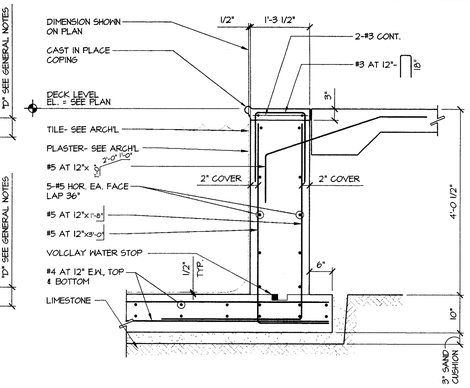

04 / S3.01 SECTION
3/4"=1'-0"

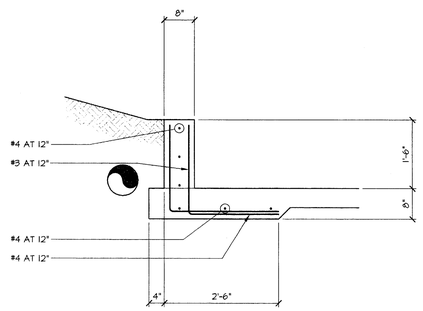

LOW RETAINING WALL

07 / S3.01 TYPICAL DETAIL

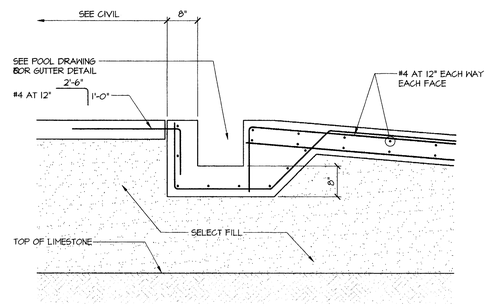

08 / S3.01 SECTION
3/4"=1'-0"

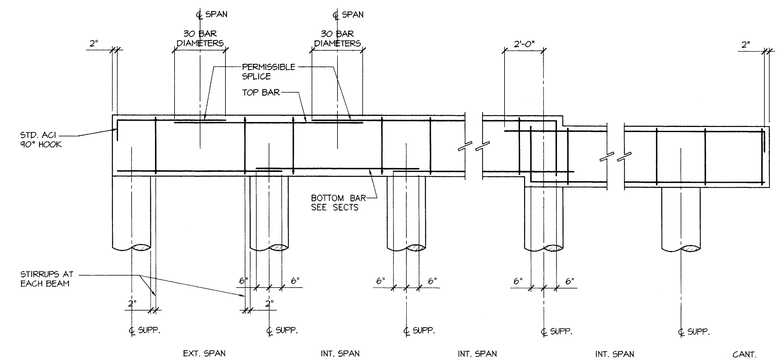

GRADE BEAM REINFORCING DIAGRAM

09 / S3.01 TYPICAL DETAIL

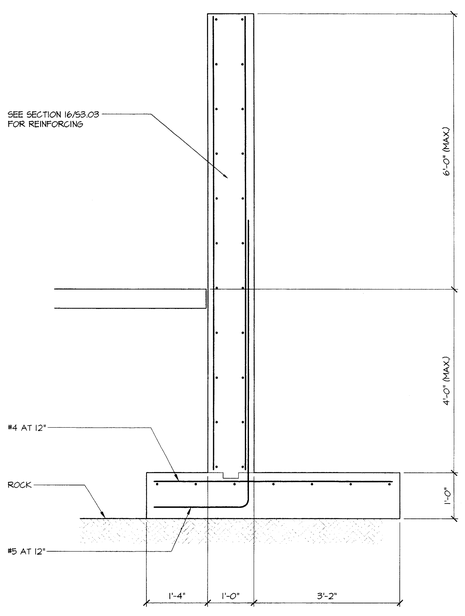

ALTERNATE FOUNDATION TO 16/S3.03

HIGH RETAINING WALL

17 / S3.01 TYPICAL DETAIL

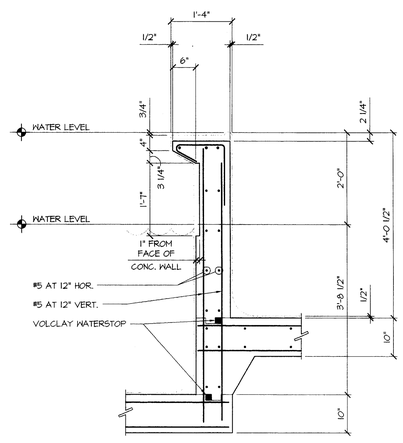

13 / S3.01 SECTION
3/4"=1'-0"

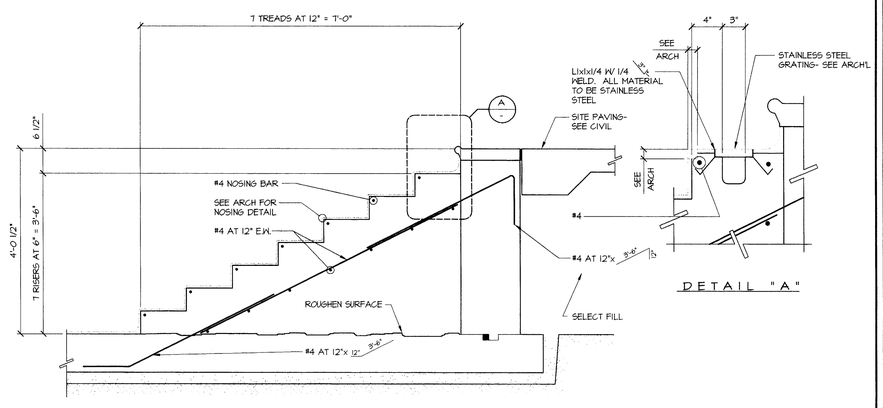

14 / S3.01 SECTION
3/4"=1'-0"

ISSUE DATE
FEBRUARY 20, 2002

REVISIONS

ADDISON ATHLETIC CLUB EXPANSION AND LEISURE POOL
ADDISON, TEXAS

RON HOBBS ARCHITECTS
614 W. MAIN ST. SUITE #200 GARLAND, TEXAS 75040
(972) 494-0174 FAX (972) 494-0722

Lee & Baldauf
Consulting Engineers Inc.
12980 Pendora Drive
Dallas, Texas 75238
214-342-0399 Fax 214-342-2600

STATE OF TEXAS
HARRY A. LEE
62126
REGISTERED PROFESSIONAL ENGINEER
2-20-02

JOB NUMBER
0012

JOB NAME
ADDISON ATHELTIC CLUB EXPANSION & LEISURE POOL

SHEET DESCRIPTION
TYPICAL SECTIONS & DETAILS

SHEET NUMBER
S3.01

2000170-00 02-20-02

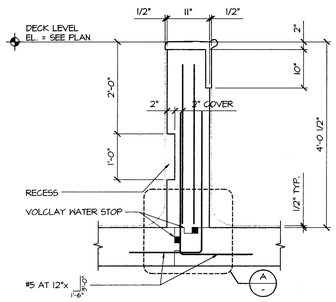

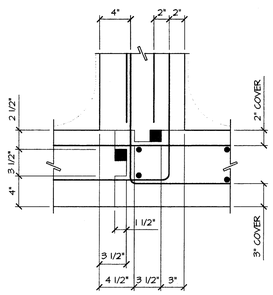

DETAIL "A"
1 1/2" = 1'-0"

01 S3.02 TYPICAL DETAIL
3/4" = 1'-0"

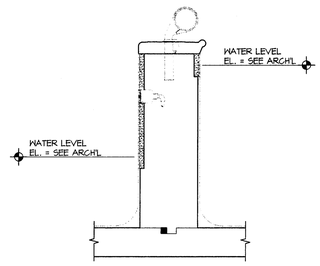

LEISURE POOL WALL SECTION

02 S3.02 TYPICAL DETAIL
3/4" = 1'-0"

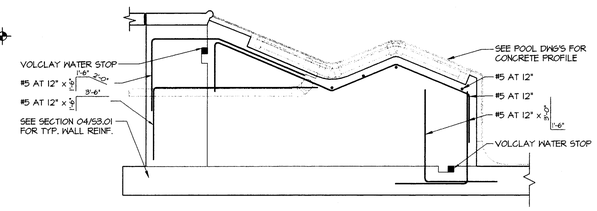

BUBBLE COUCH

03 S3.02 TYPICAL DETAIL
3/4" = 1'-0"

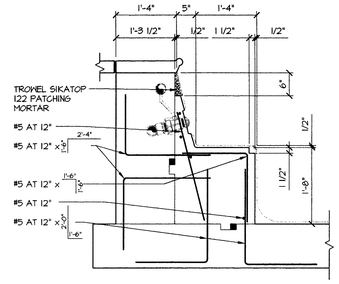

UNDERWATER COUCH

04 S3.02 TYPICAL DETAIL
3/4" = 1'-0"

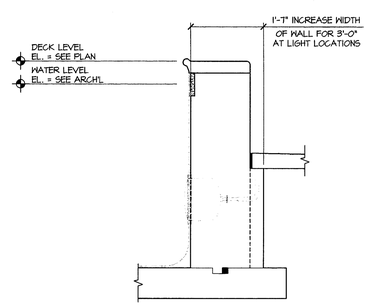

UNDERWATER LIGHT DETAIL

05 S3.02 TYPICAL DETAIL
3/4" = 1'-0"

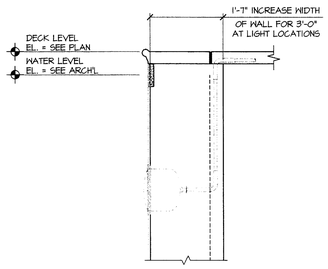

UNDERWATER LIGHT DETAIL

06 S3.02 TYPICAL DETAIL
3/4" = 1'-0"

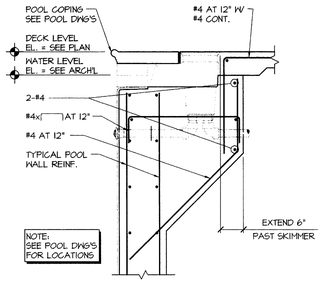

SKIMMER DETAIL

07 S3.02 TYPICAL DETAIL
3/4" = 1'-0"

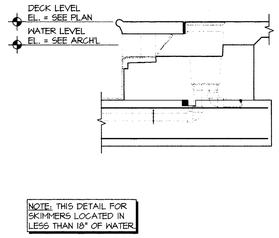

CHILDREN'S SKIMMER DETAIL

08 S3.02 TYPICAL DETAIL
3/4" = 1'-0"

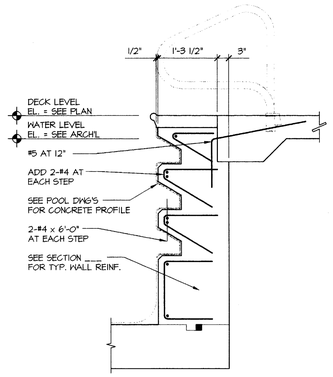

SECTION

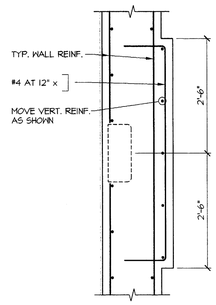

PLAN "C"

GRAB RAILS AND RECESSED STEPS

09 S3.02 TYPICAL DETAIL
3/4" = 1'-0"

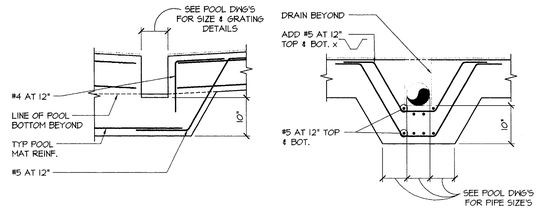

POOL DRAIN

10 S3.02 TYPICAL DETAIL
3/4" = 1'-0"

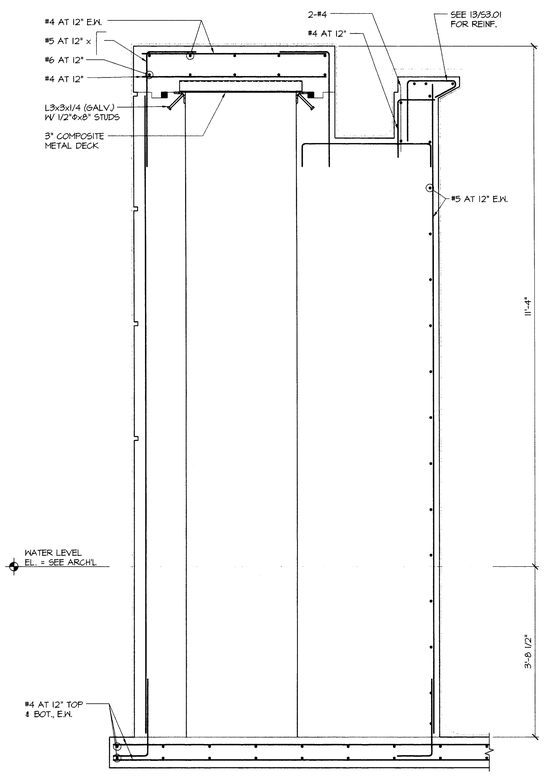

06 S3.02 TYPICAL DETAIL
3/4" = 1'-0"

ISSUE DATE
FEBRUARY 20, 2002

REVISIONS

ADDISON ATHLETIC CLUB EXPANSION AND LEISURE POOL
ADDISON, TEXAS

RON HOBBS ARCHITECTS
614 W. MAIN ST. SUITE #200 GARLAND, TEXAS 75040
(972) 494-0174 FAX (972) 494-0722

Lee & Baldauf
Consulting Engineers Inc.
12818 Pandora Drive
Dallas, Texas 75238
214-342-0399 Fax 214-342-2800

STATE OF TEXAS
HARRY W. LEE
62123
REGISTERED PROFESSIONAL ENGINEER
2-19-01

JOB NUMBER
0012

JOB NAME
ADDISON ATHELTIC CLUB
EXPANSION & LEISURE POOL

SHEET DESCRIPTION
TYPICAL POOL
SECTIONS & DETAILS

SHEET NUMBER
S3.02

2001070-00 02-20-02

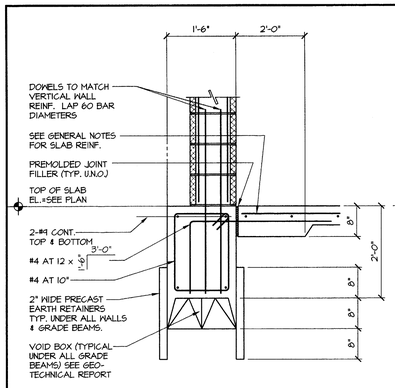

01 S3.03 SECTION

3/4"=1'-0" (TYP. U.N.O.)

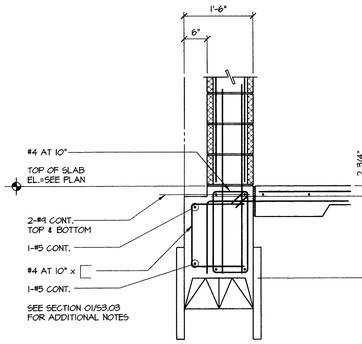

02 S3.03 SECTION

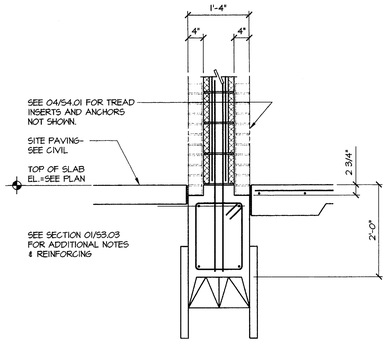

03 S3.03 SECTION

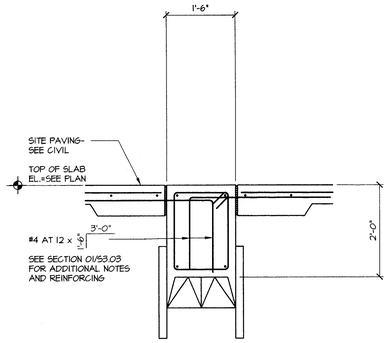

04 S3.03 SECTION

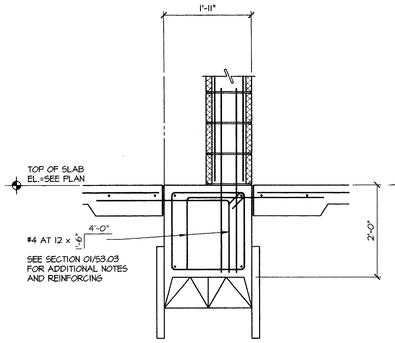

05 S3.03 SECTION

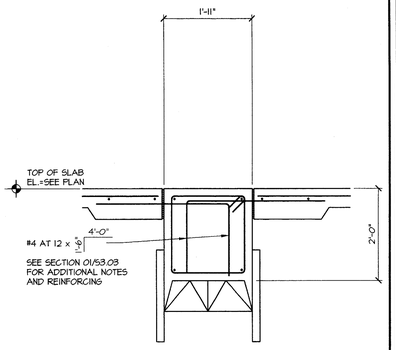

06 S3.03 SECTION

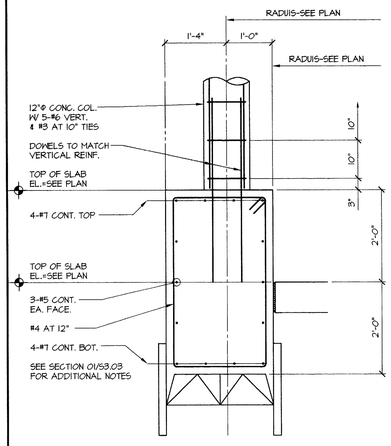

07 S3.03 SECTION

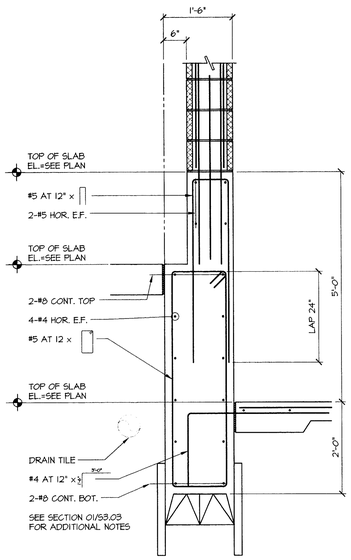

08 S3.03 SECTION

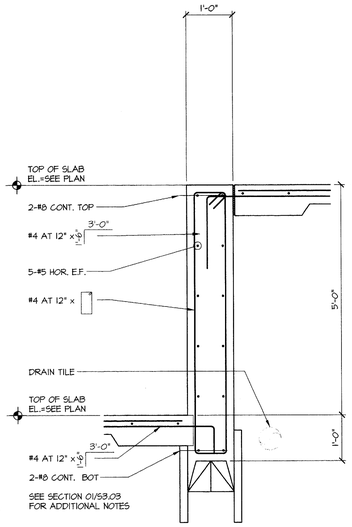

09 S3.03 SECTION

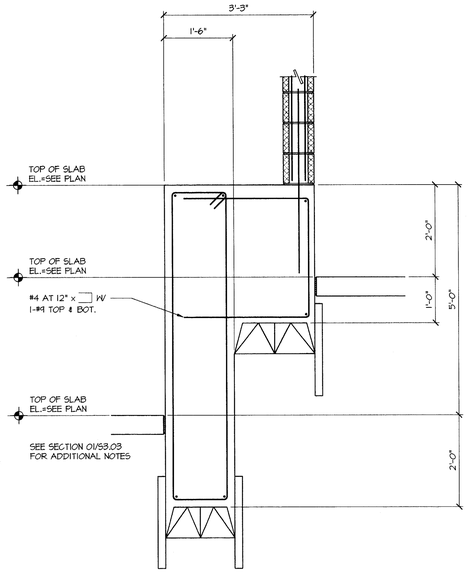

10 S3.03 SECTION

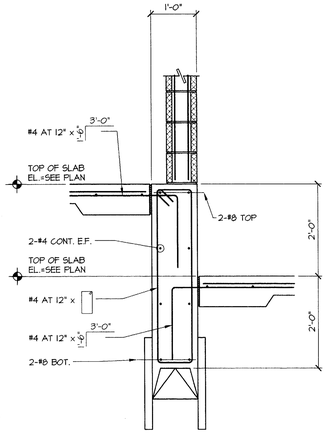

11 S3.03 SECTION

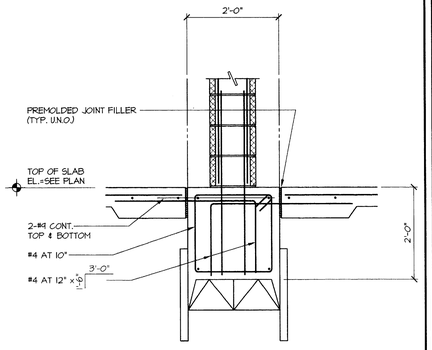

12 S3.03 SECTION

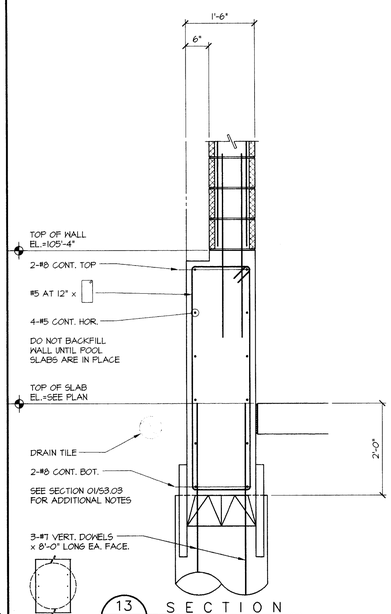

13 S3.03 SECTION

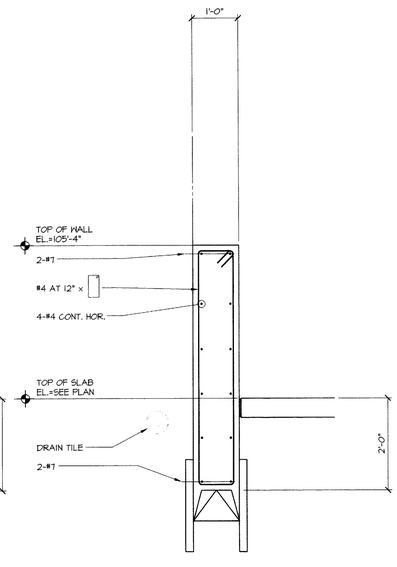

14 S3.03 SECTION

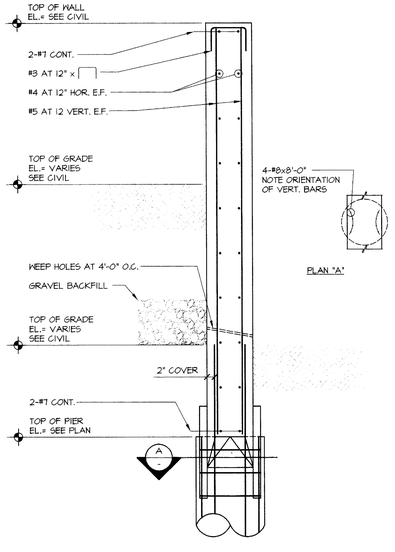

ALTERNATE HIGH RETAINING WALL

16 S3.01 TYPICAL DETAIL

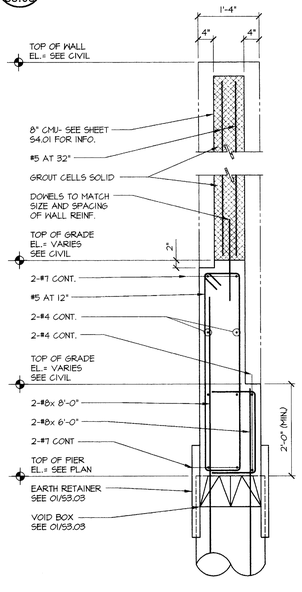

ALTERNATE HIGH RETAINING WALL

17 S3.03 TYPICAL DETAIL

ISSUE DATE
FEBRUARY 20, 2002

REVISIONS

ADDISON ATHLETIC CLUB EXPANSION AND LEISURE POOL
ADDISON, TEXAS

RON HOBBS ARCHITECTS
614 W. MAIN ST. SUITE #200 GARLAND, TEXAS 75040
(972) 494-0174 FAX (972) 494-0722

Lee & Baldauf Consulting Engineers Inc.
12360 Pandora, 75228
Dallas, Texas
214-342-2600 Fax 214-342-2600

2-20-02

JOB NUMBER
0012

JOB NAME
ADDISON ATHLETIC CLUB EXPANSION & LEISURE POOL

SHEET DESCRIPTION
TYPICAL SECTIONS & DETAILS

SHEET NUMBER
S3.03

02-20-02

2001070-00

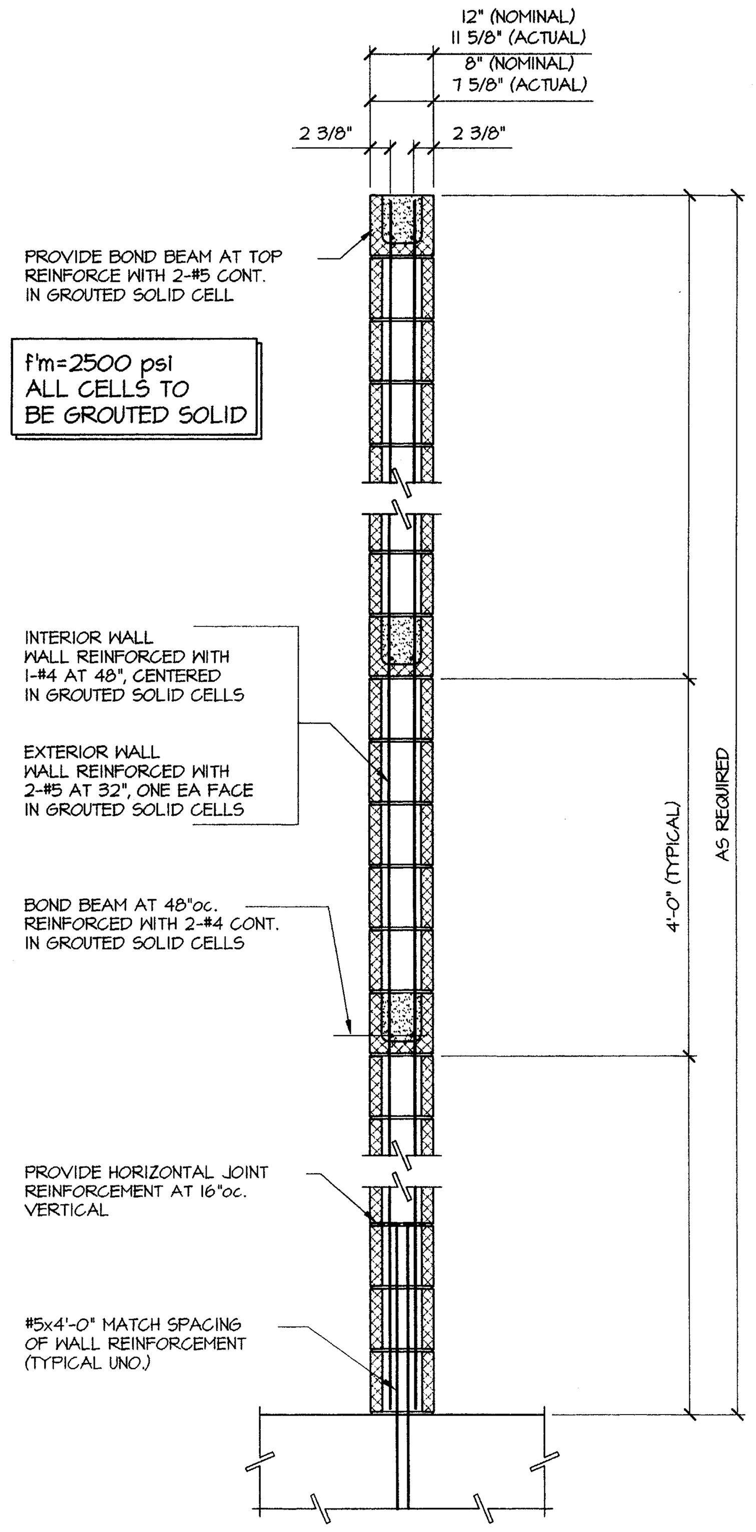

MASONRY WALL REINFORCING

05 / S4.01 TYPICAL DETAIL 3/4"=1'-0"

LOOSE ANGLE LINTELS FOR BRICK MASONRY			
CLEAR SPAN	EXTERIOR ANGLES FOR 4" BRICK	WALL THK.	INTERIOR ANGLES W/O FLOOR LOAD
4'-0" OR LESS	L3 1/2 x 3 1/2 x 5/16	8"	L3 1/2 x 3 1/2 x 5/16
		12"	2-L3 1/2 x 3 1/2 x 5/16
5'-0"	L3 1/2 x 3 1/2 x 5/16	8"	L3 1/2 x 3 1/2 x 5/16
		12"	2-L3 1/2 x 3 1/2 x 5/16
6'-0"	L4 x 3 1/2 x 5/16	8"	L4 x 3 1/2 x 5/16
		12"	2-L4 x 3 1/2 x 5/16
7'-0"	L4 x 3 1/2 x 5/16	8"	L4 x 3 1/2 x 5/16
		12"	2-L4 x 3 1/2 x 5/16
8'-0"	L5 x 3 1/2 x 5/16	8"	L5 x 3 1/2 x 3/8
		12"	2-L5 x 3 1/2 x 5/16
9'-0"	L5 x 3 1/2 x 3/8	8"	L5 x 3 1/2 x 3/8
		12"	2-L5 x 3 1/2 x 3/8
10'-0"	L6 x 3 1/2 x 3/8	8"	L6 x 3 1/2 x 3/8
		12"	2-L6 x 3 1/2 x 3/8

1. 8" MIN. BEARING REQUIRED FOR ALL LINTELS ABOVE.
2. INTERIOR AND EXTERIOR ANGLES IN 8" WALLS AND INTERIOR AND EXTERIOR ANGLES IN 12" WALLS ARE BOLTED TOGETHER WHEN CLEAR SPAN OPENING IS OVER 6'-0".
3. IN THE CASE OF BRICK VENEER WALLS W/ BLOCK BACK UP, BOTH SCHEDULES ARE USED. LINTELS FOR BRICK SHALL BE PICKED FROM THE EXTERIOR ANGLE PORTION OF THE ABOVE SCHEDULE, AND LINTELS FOR THE BLOCK SHALL BE CHOSEN FROM DETAIL 02/S5.01.
4. THE SCHEDULE ABOVE APPLIES ONLY TO NON-LOAD BEARING WALLS.
5. LONG LEG IS VERTICAL IN ALL CASES UNLESS OTHERWISE DETAILED.

STEEL LINTEL SCHEDULE

01 / S4.01 TYPICAL DETAIL 3/4"=1'-0"

CONCRETE MASONRY LINTEL SCHEDULE			
"W" (CLEAR SPAN)	CMU LINTEL UNIT	REINFORCING	DETAIL
2'-0" TO 4'-0"	N"x8"x16"	2-#4	10/S5.01
4'-0" TO 6'-0"	N"x8"x16"	2-#5	10/S5.01
6'-0" TO 8'-0"	N"x16"x16"	2-#5 WITH #3 STIRRUPS AT 6 1/2"oc.	11/S5.01
8'-0" TO 10'-0"	N"x16"x16"	2-#6 WITH #3 STIRRUPS AT 6 1/2"oc.	11/S5.01

"N" = NOMINAL

NOTES:

1. PROVIDE LINTEL AT ALL CONCRETE MASONRY OPENING UNLESS STEEL LINTELS ARE PROVIDED PER DETAIL 03/S5.01.
2. REFERENCE ARCHITECTURAL AND MECHANICAL FOR SIZE AND LOCATIONS OF OPENINGS. NOT ALL CMU OPENINGS/ PENETRATIONS ARE INDICATED OR SHOWN, AND IT IS THE RESPONSIBILITY OF THE CONTRACTOR TO COORDINATE, VERIFY AND PROPERLY SIZE ALL CMU WALL OPENINGS REQUIRED FOR DOORS, WINDOWS, LOUVERS, DUCTWORK, PIPING, FANS, ETC.
3. ALL MASONRY OPENINGS ARE TO BE SHORED UNTIL THE MASONRY HAS CURED SUFFICIENTLY (72 HOURS, MIN).
4. PRECAST CONCRETE LINTELS MAY BE USED WITH ARCHITECT'S APPROVAL.

CONCRETE MASONRY LINTEL SCHEDULE

02 / S4.01 TYPICAL DETAIL 3/4"=1'-0"

STEEL LINTEL SCHEDULE			
DETAIL	SIZE	DETAIL	MINIMUM BEARING LENGTH
LESS THAN 4'-0"	2-L3 1/2"x2 1/2"x1/4"	┴	8"
4'-0" TO 6'-0"	2-L4"x3 1/2"x1/4"	┴	8"
6'-0" TO 6'-8"	2-L4"x3 1/2"x5/16"	┴	8"
8'-0"	2-L5"x3 1/2"x5/16"	┴	8"
8'-6"	2-L6"x3 1/2"x3/8"	┴	8"
10'-0" TO 12"-0"	W8x10 WITH PL3/8"x7"	I	8"

NOTES:

1. PROVIDE (1) ANGLE FOR BRICK VENEER LINTEL OF APPROXIMATE SIZE WITH ASSOCIATED SPAN.
2. STEEL LINTELS MAY BE OPTED FOR AND PROVIDED BY CONTRACTOR IN LIEU OF CMU LINTEL INDICATED IN DETAIL 02/S5.01.
3. REINFORCE CMU JAMBS / SIDE CORES BENEATH STEEL LINTEL BEARING SIMILAR TO DETAIL 10/S5.01.

STEEL LINTEL SCHEDULE

03 / S4.01 TYPICAL DETAIL 3/4"=1'-0"

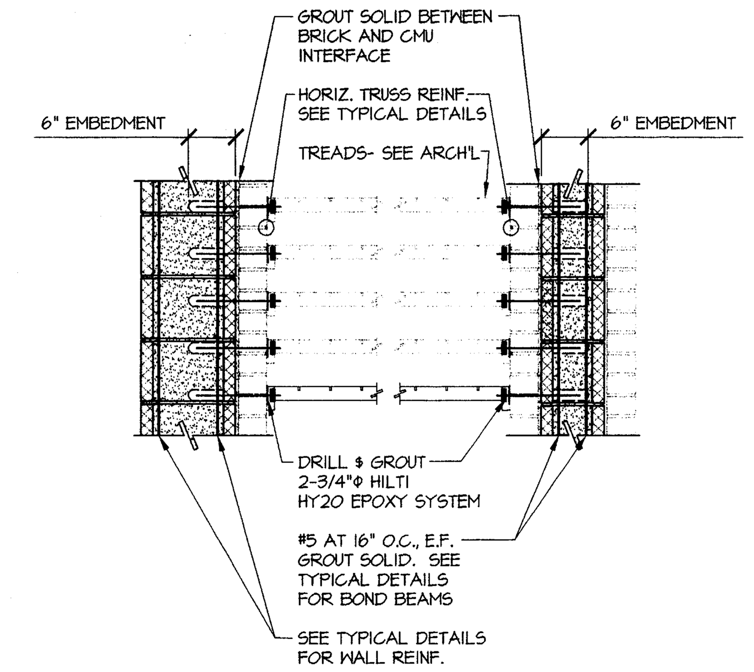

NOTE:
STAIR TREADS BRACE WALL. CONTRACTOR TO DESIGN AND PROVIDE SHORING OF WALLS DURING CONSTRUCTION. SHORING SHALL REMAIN IN PLACE UNTIL ALL TREADS ARE INSTALLED.

04 / S4.01 SECTION 3/4"=1'-0"

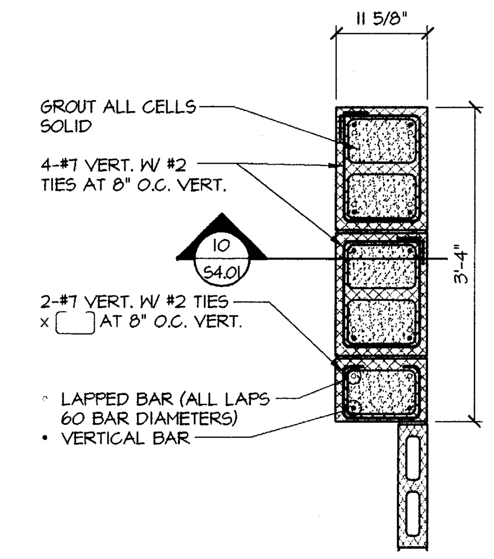

TYPICAL PILASTER PLAN DETAIL

05 / S4.01 TYPICAL DETAIL 3/4"=1'-0"

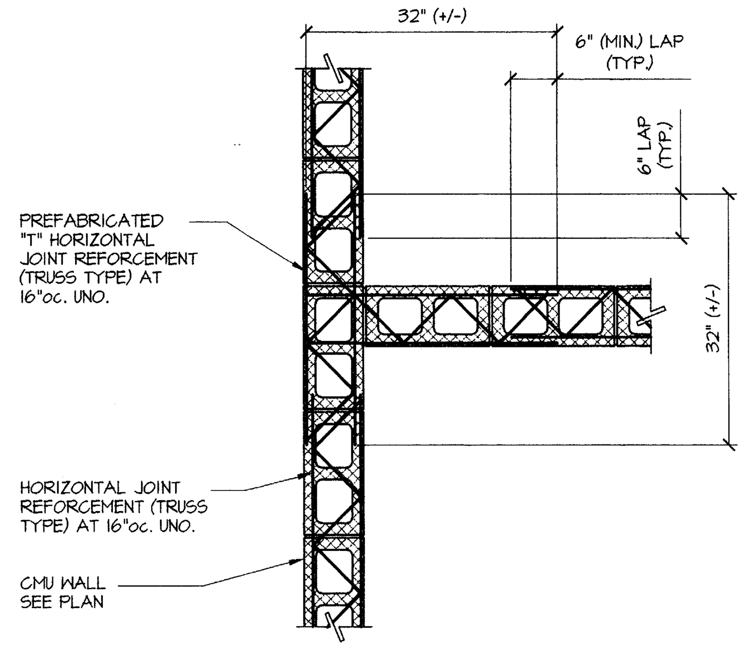

CMU JOINT REINFORCEMENT AT INTERSECTING WALL

06 / S4.01 TYPICAL DETAIL 3/4"=1'-0"

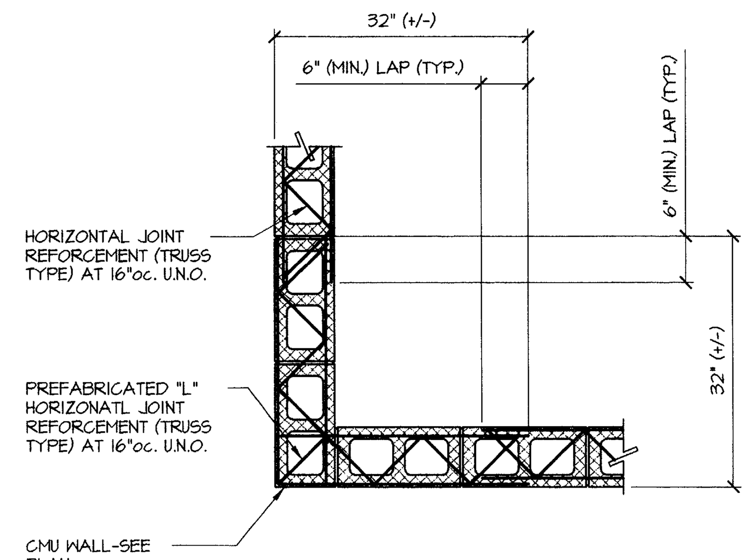

CMU JOINT REINFORCEMENT AT INTERSECTING WALL

07 / S4.01 TYPICAL DETAIL 3/4"=1'-0"

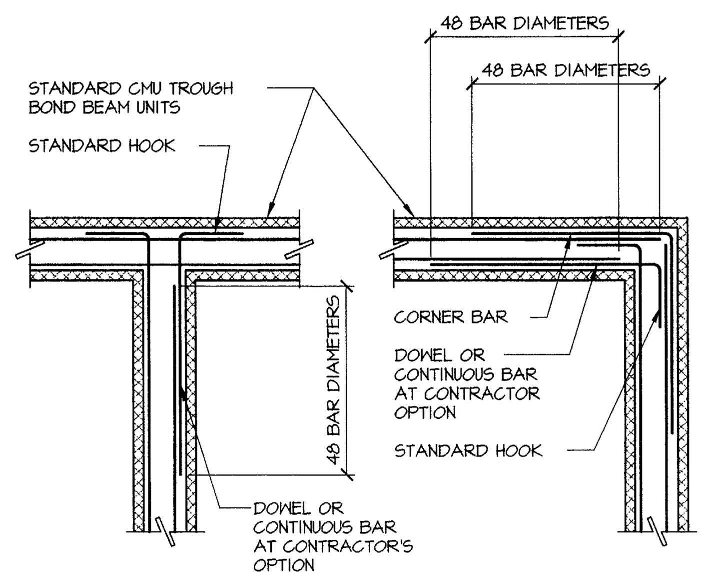

NOTE:

CORNER BARS AND DOWEL SHALL BE THE SAME SIZE AND NUMBER AS THE BOND BEAM REINFORCING UNLESS NOTED OTHERWISE.

BOND BEAM CORNER BAR REFORCEMENT

08 / S4.01 TYPICAL DETAIL 3/4"=1'-0"

NOTES:

1. USE SEALANT BOTH SIDES FULL HEIGHT OF WALL.
2. MAXIMUM CONTROL JOINT SPACING IS 20'-0"oc..
3. WHERE POSSIBLE, POSITION CMU WALL CONTROL JOINT TO COINCIDE WITH SLAB-ON-GRADE CONTROL / CONSTRUCTION JOINTS.
4. SUBMIT A CMU CONTROL JOINT PLAN TO THE ARCHITIECT FOR REVIEW AND APPROVAL.

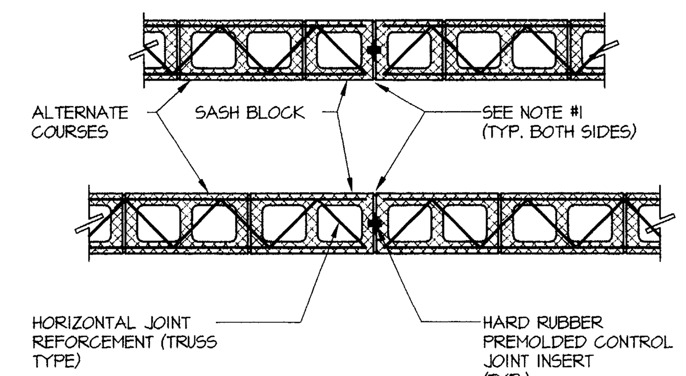

NOTE:

IN LIEU OF HARD RUBBER PREMOLDED CONTROL JOINT INSERT AND SPECIAL SASH BLOCKS, A CONTROL JOINT SHEAR BAR (12" LONG x 1" WIDE x 1/4" THICK) MAY BE GROUTED INTO THE WALL AT THE CONTROL JOINT AT 16"oc.

CONTROL JOINT IN CMU WALL

09 / S4.01 TYPICAL DETAIL 3/4"=1'-0"

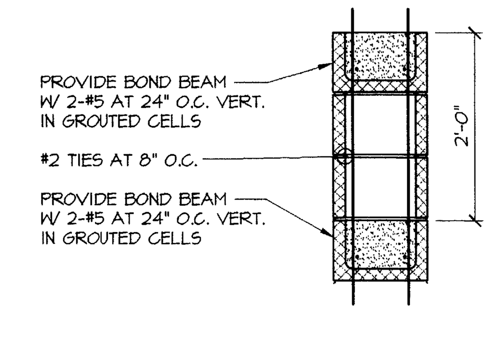

TYPICAL PILASTER SECTION

10 / S4.01 TYPICAL DETAIL 3/4"=1'-0"

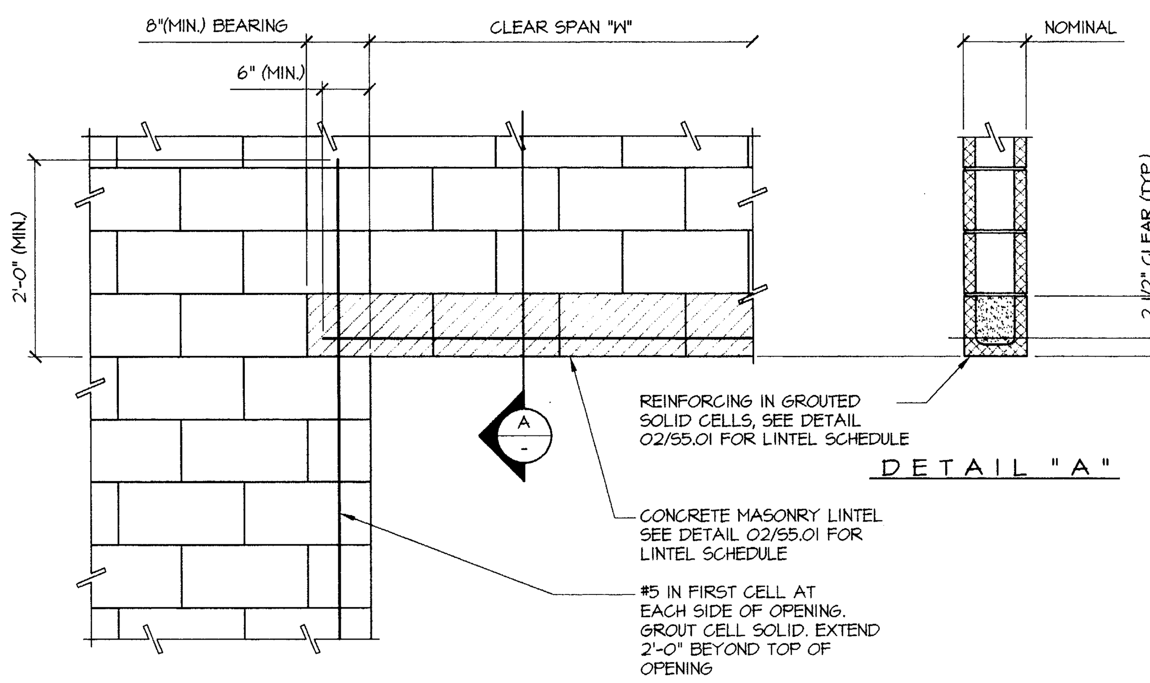

SIMPLY SUPPORTED CMU LINTEL

10 / S4.01 TYPICAL DETAIL 3/4"=1'-0"

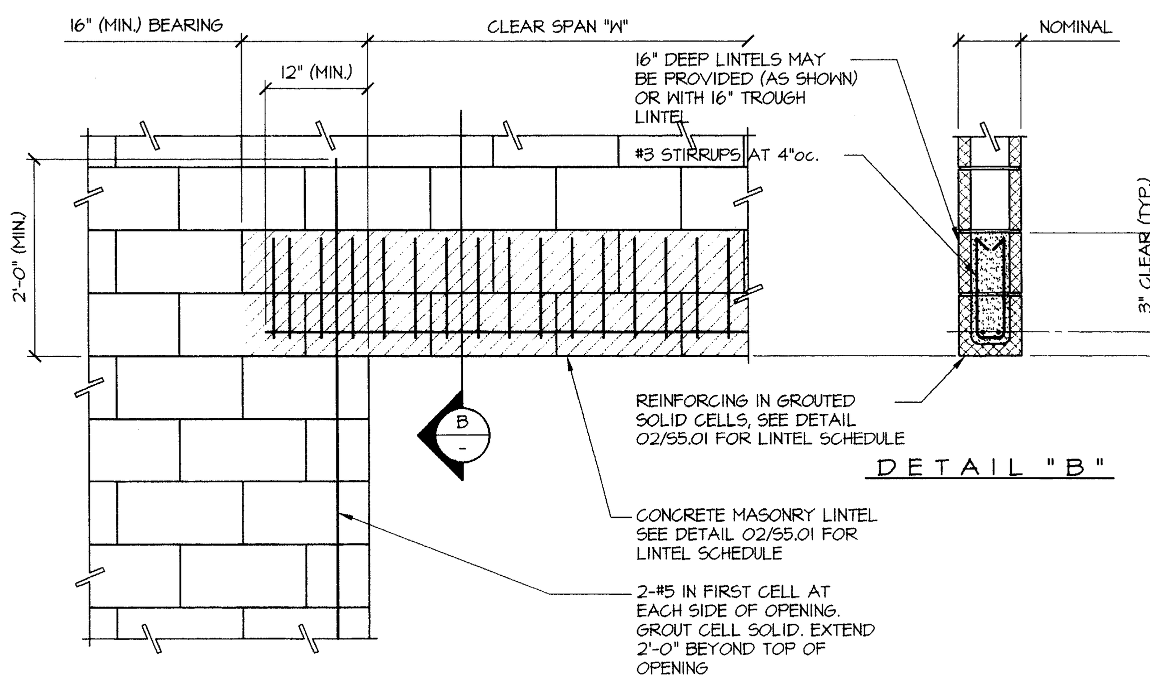

SIMPLY SUPPORTED 16" CMU LINTEL

11 / S4.01 TYPICAL DETAIL 3/4"=1'-0"

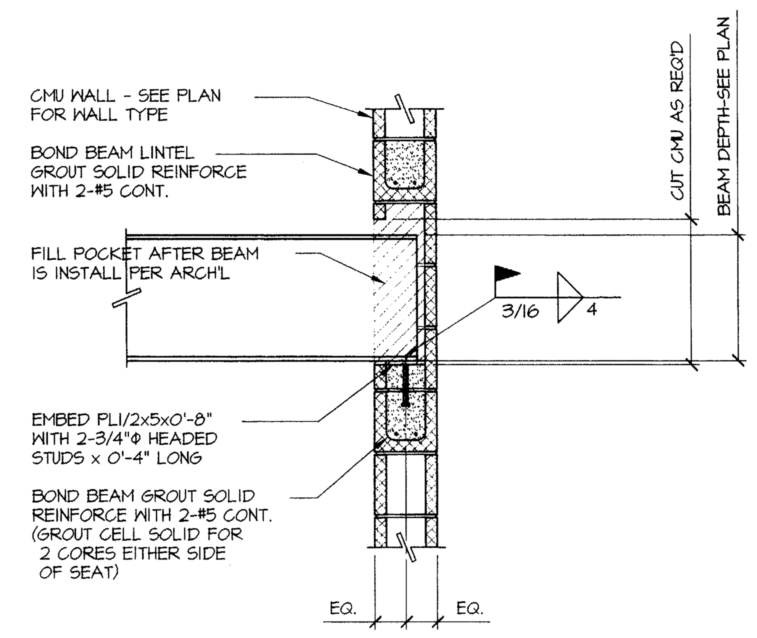

STEEL BEAM/MASONRY WALL CONNECTION

12 / S4.01 TYPICAL DETAIL 3/4"=1'-0"

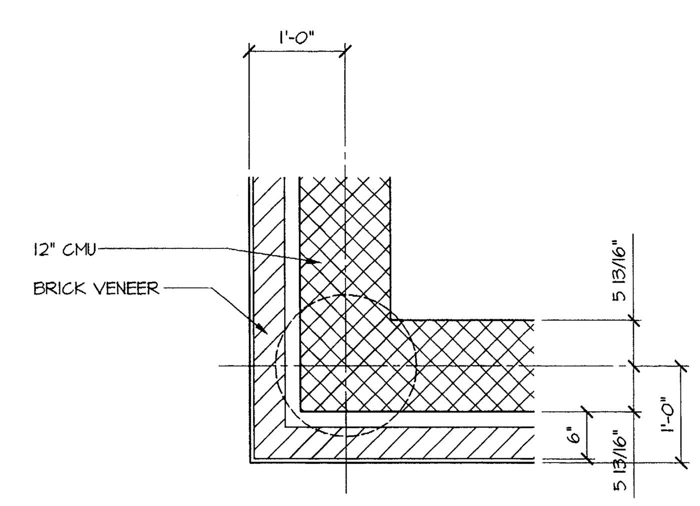

13 / S4.01 SECTION 3/4"=1'-0"

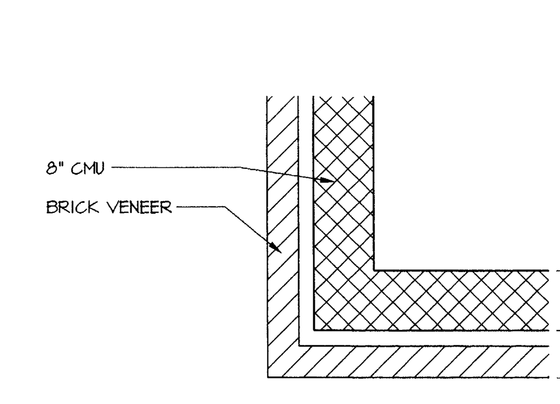

14 / S4.01 SECTION 3/4"=1'-0"

ISSUE DATE
FEBRUARY 20, 2002
REVISIONS

ADDISON ATHLETIC CLUB EXPANSION AND LEISURE POOL
ADDISON, TEXAS

RON HOBBS ARCHITECTS
614 W. MAIN ST. SUITE #200 GARLAND, TEXAS 75040
(972) 494-0174 FAX (972) 494-0722

Lee & Baldauf
Consulting Engineers Inc.
12980 Pandora Drive
Dallas, Texas 75238
214-342-0399 Fax 214-342-2600

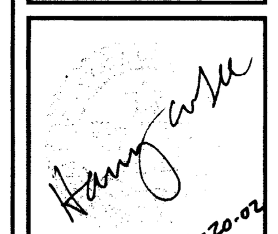

JOB NUMBER
0012
JOB NAME
ADDISON ATHELTIC CLUB EXPANSION & LEISURE POOL

SHEET DESCRIPTION
TYPICAL CMU SECTIONS & DETAILS
SHEET NUMBER
S4.01

2001070-00 02-20-02

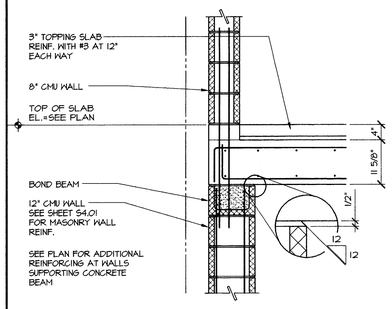

01 SECTION
S5.01
3/4"=1'-0" (TYP. U.N.O.)

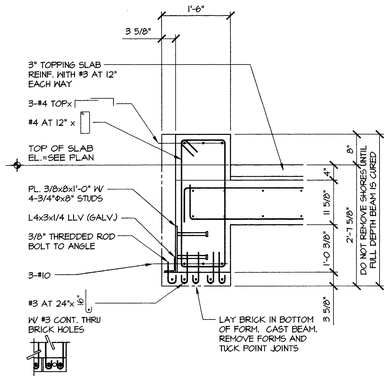

02 SECTION
S5.01

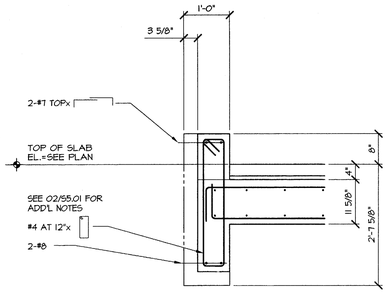

03 SECTION
S5.01

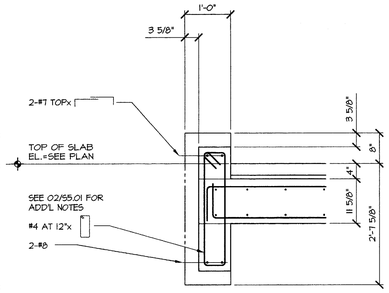

04 SECTION
S5.01

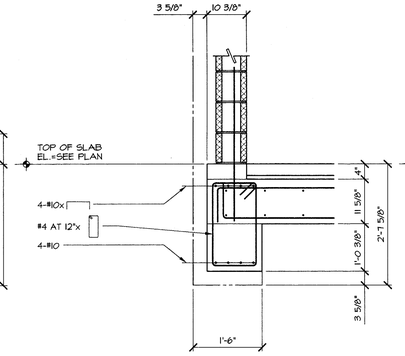

05 SECTION
S5.01

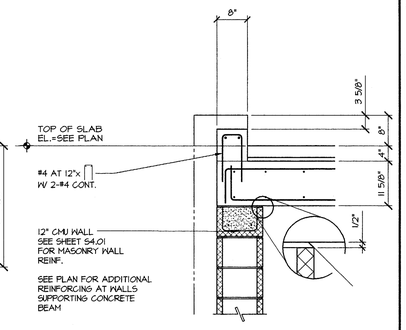

06 SECTION
S5.01

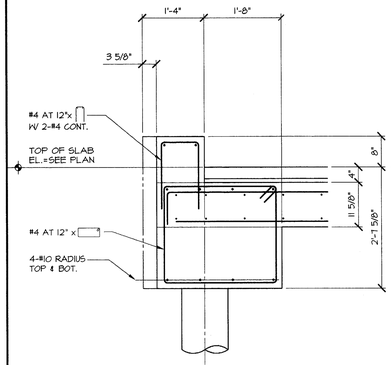

07 SECTION
S5.01

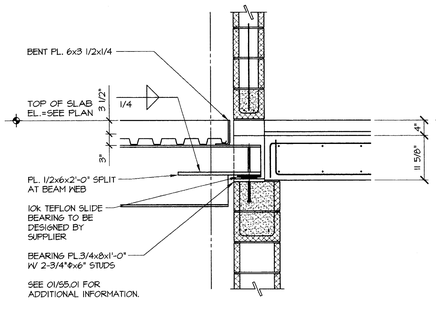

08 SECTION
S5.01

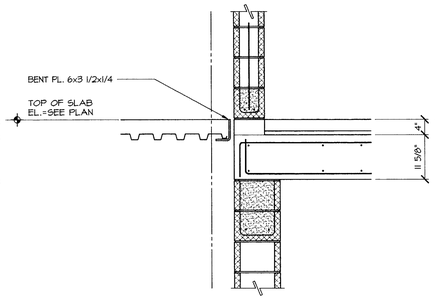

09 SECTION
S5.01

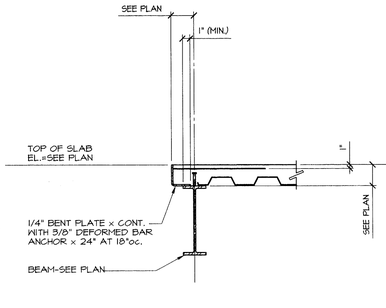

CLOSURE ANGLE
10 TYPICAL DETAIL
S5.01

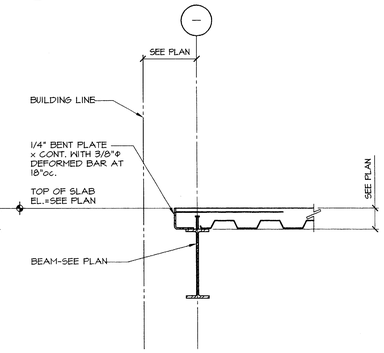

11 SECTION
S5.01

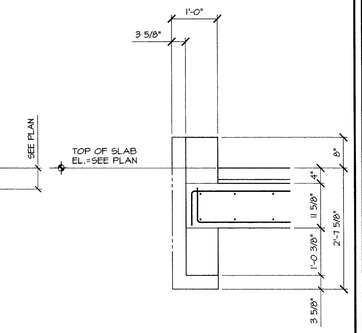

12 SECTION
S5.01

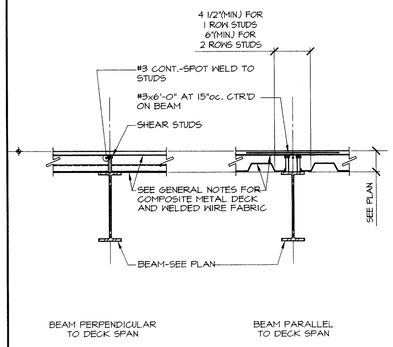

STUD PLACEMENT
13 TYPICAL DETAIL
S5.01

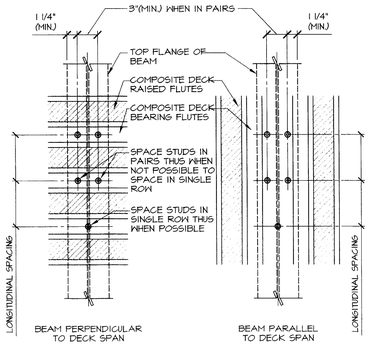

STUD PLACEMENT PLANS
14 TYPICAL DETAIL
S5.01

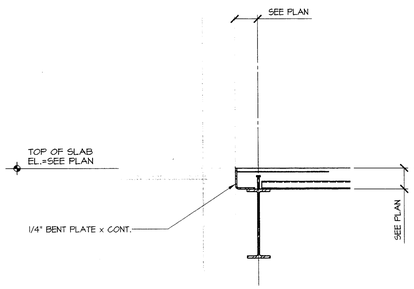

15 SECTION
S5.01

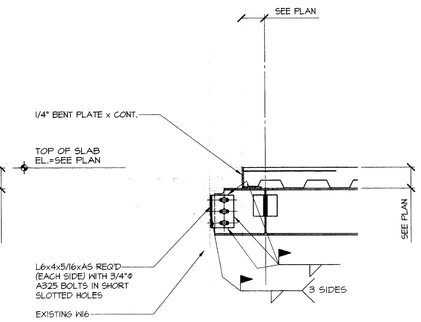

16 SECTION
S5.01

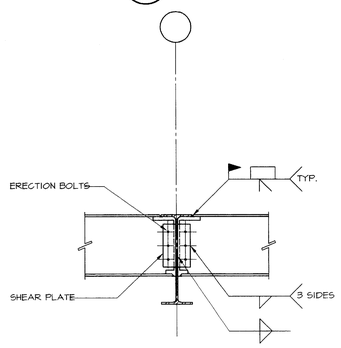

BEAM TO BEAM MOMENT CONNECTION
17 TYPICAL DETAIL
S5.01

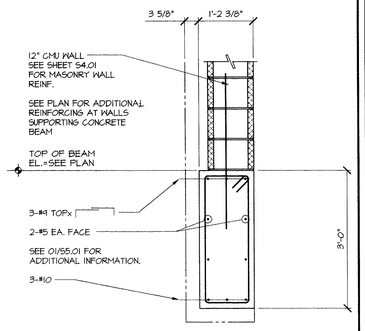

18 SECTION
S5.01

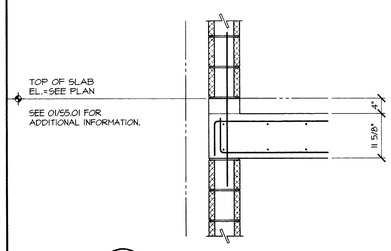

19 SECTION
S5.01

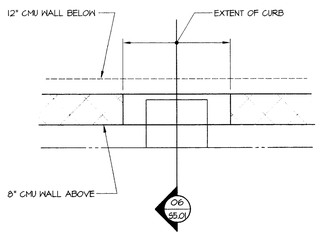

20 SECTION
S5.01

02-20-02
2000170-00

ISSUE DATE
FEBRUARY 20, 2002

REVISIONS

ADDISON ATHLETIC CLUB EXPANSION AND LEISURE POOL
ADDISON, TEXAS

RON HOBBS ARCHITECTS
614 W. MAIN ST. SUITE #200 GARLAND, TEXAS 75040
(972) 494-0174 FAX (972) 494-0722

Lee & Baldauf
Consulting Engineers Inc.
Dallas, Texas 75238
214-342-0399 Fax 214-342-2600

2-20-02

JOB NUMBER
0012

JOB NAME
ADDISON ATHLETIC CLUB EXPANSION & LEISURE POOL

SHEET DESCRIPTION
CONCRETE SECTIONS & DETAILS

SHEET NUMBER
S5.01

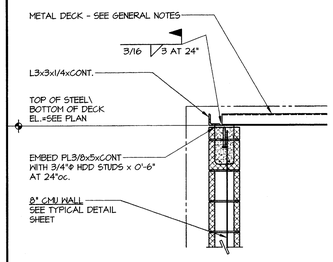

01 SECTION
S6.01

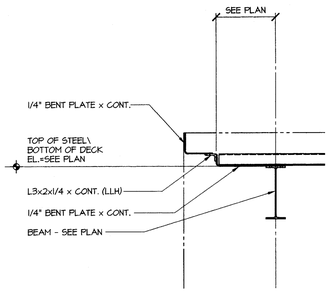

02 SECTION
S6.01

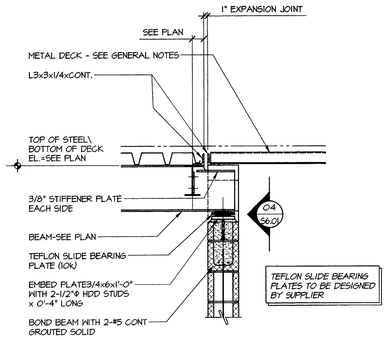

03 SECTION
S6.01

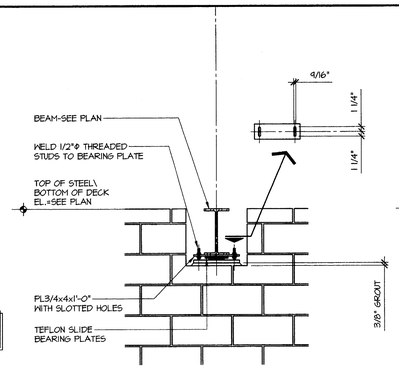

04 SECTION
S6.01

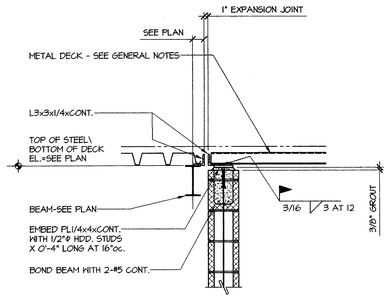

05 SECTION
S6.01

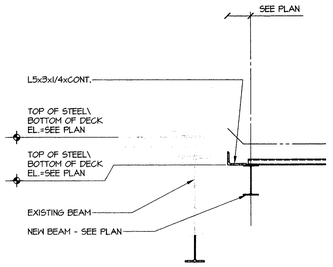

06 SECTION
S6.01

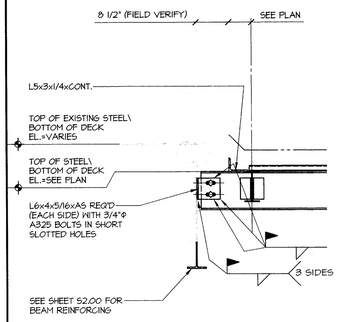

07 SECTION
S6.01

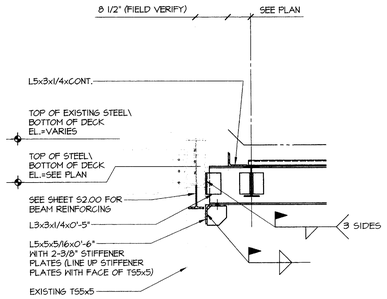

08 SECTION
S6.01

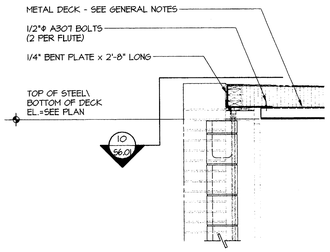

09 SECTION
S6.01

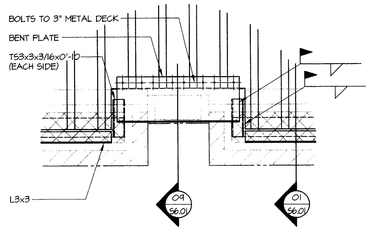

10 DETAIL
S6.01

ISSUE DATE
FEBRUARY 20, 2002

REVISIONS

ADDISON ATHLETIC CLUB EXPANSION AND LEISURE POOL
ADDISON, TEXAS

RON HOBBS ARCHITECTS
614 W. MAIN ST. SUITE #200 GARLAND, TEXAS 75040
(972) 494-0174 FAX (972) 494-0722

Lee & Baldauf
Consulting Engineers Inc.
12366 Pandora Drive
Dallas, Texas 75230
214-342-0399 Fax 214-342-2600

2-20-02

JOB NUMBER
0012
JOB NAME
ADDISON ATHELTIC CLUB
EXPANSION & LEISURE POOL

SHEET DESCRIPTION
STEEL
SECTIONS & DETAILS
SHEET NUMBER
S6.01

CAD Name 200101-00 02-20-02

A.C. UNIT SCHEDULE (CARRIER)

UNIT MARK	MANUFACTURER & MODEL NO.	COOLING (TONS) NOMINAL	CFM	EXT. S.P.	CFM O.A.	IN. FAN HP	EXH. FAN HP	ELECTRIC MCA	ELECTRIC VOLT/ϕ	ELECTRIC MOCP	(S.E.E.R.) E.E.R.	WEIGHT	ECONO-MIZER	HEATING ELEC. (KW)	REMARKS
AC-1	50BYN008	7.5	2600	0.8"	200	1.5	-	21.0	460/3	30	8.9	-	NO	-	
AC-2	50BYN008	7.5	3000	0.8"	200	1.5	-	21.0	460/3	30	8.9	-	NO	-	
AC-3	=AC-2														
AC-4	=AC-2														
AC-5	=AC-2														

AIR DEVICE SCHEDULE

UNIT MARK	S,E, OR R	TYPE	VOLUME CONTROL	SIZE FACE	SIZE NECK	FRAME STYLE	MANUFACTURER & MODEL NO.	REMARKS
A	S	LOUVER	*	24x24	SEE PLAN	LAY-IN	TITUS TMS-AA	ALUMINUM
B	S	"	*	* *	"	SURF.	"	"
C	R	EGGCRATE	NO	24x24	"	LAY-IN	50F-3	"
D	R	"	"	SEE PLAN	"	SURF.	"	"
E	S	SIDEWALL	YES	"	"	"	300 RL-AG15	DOUBLE DEFLECTION
F	R	"	NO	--	"	"	350 RL	
G	S	LOUVER	NO	--	"		DOWCO DBE-04	EXTRUDED ALUMINUM

* INSTALL IN TRUNK DUCT WHERE THIS IS ABOVE ACCESSIBLE CEILING, IF NOT, PROVIDE WITH AIR DEVICE.
* * AS SMALL AS AVAILABLE

NOTE: ALL INDOOR DEVICES SHALL BE WHITE

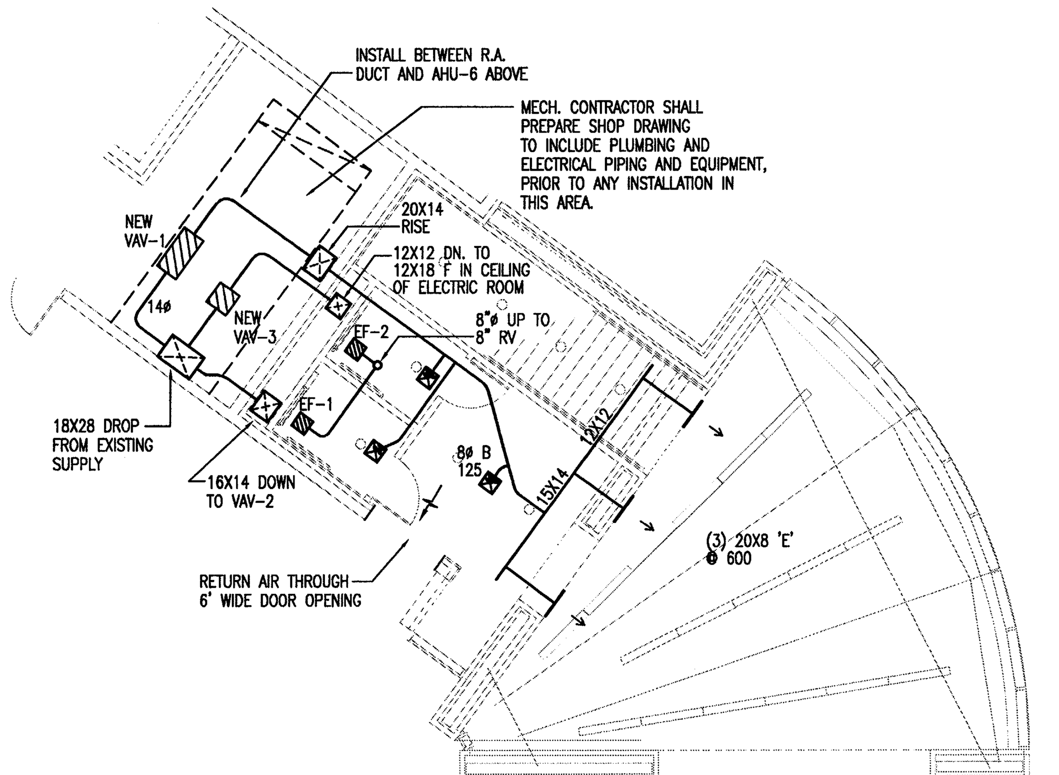

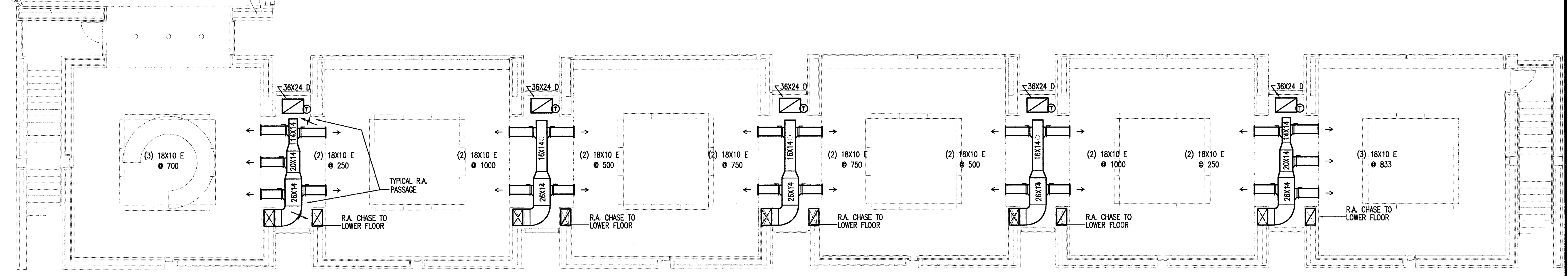

1 upper floor – hvac
SCALE: 1/8" = 1' - 0"

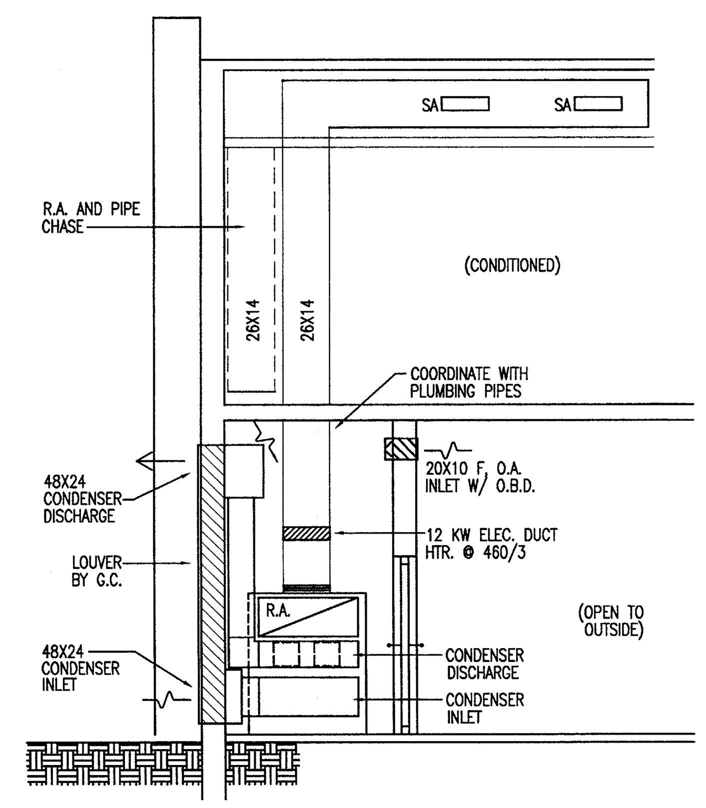

3 ac–detail
SCALE: NTS

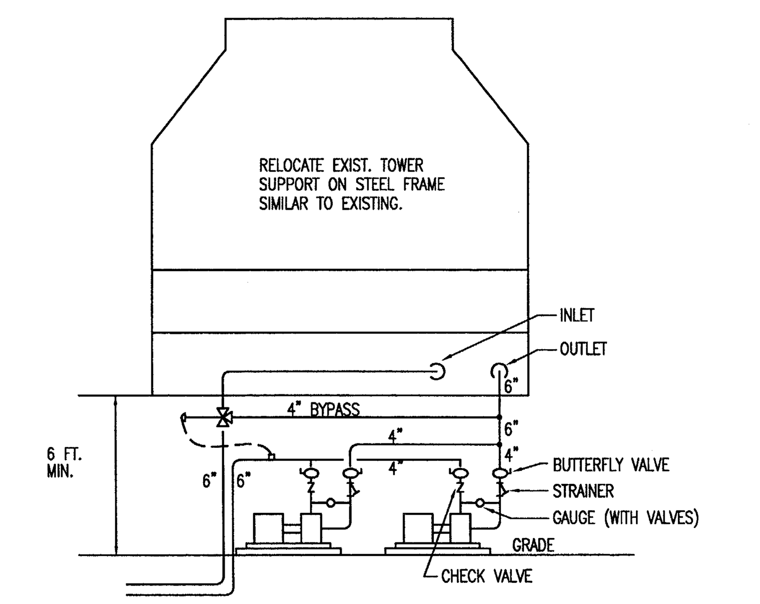

4 cooling tower diagram
SCALE: NTS

PUMP SCHEDULE

UNIT MARK	SERVICE	GPM	PRESSURE SUCT.	PRESSURE DISCH	PRESSURE DIFF.	MOTOR HP	MOTOR RPM	MOTOR VOLT/PH.	MANUFACTURER & MODEL NO.	REMARKS
P-1	CONDENSER WATER	200	35	95	60	5	1750	460/3	PACO CC-2095-3	
P-2	CONDENSER WATER	200	35	95	60	5	1750	460/3	PACO CC-2095-3	

EXHAUST FAN SCHEDULE

UNIT MARK	CFM	S.P. (W.G.)	RPM	WHEEL DIA(MIN)	DRIVE	MOTOR HP	MOTOR ELEC	SONES (MAX)	MANUFACTURER & MODEL NO.	REMARKS
EF-1, 2	109	1/4"	1500		DIRECT	70W	120 / 1	3.0	LOREN COOK GC-140	W/ INT. BACKDRAFT DAMPER
EF-3,4	1439	3/8"	1000		DIRECT	1/2	120 / 1	5.2	LOREN COOK GEMINI GN-940	W/ INT. BACKDRAFT DAMPER
RV									TYPE PR	GRAVITY ROOF VENTILATOR

EF-1 & EF-2 SHALL BE FURNISHED WITH TRANSFORMERS FOR 277/1 SERVICE.

VAV SCHEDULE

UNIT MARK	SIZE	CFM RANGE HIGH	CFM RANGE LOW	MAX. P.D.	FAN SIZE	FAN CFM	FAN HP	ELECTRIC HEATER KW	ELECTRIC HEATER STAGE	ELECTRIC HEATER VOLT/PH	MANUFACTURER & MODEL NO.
VAV-1	14"	2025	500	0.10"	-	-	-	10	2	480/1	ENVIRO-TEC SDR-EH
VAV-2	=VAV-1										
VAV-3	8"	600	150	0.10"	-	-	-	-	-	-	SDR

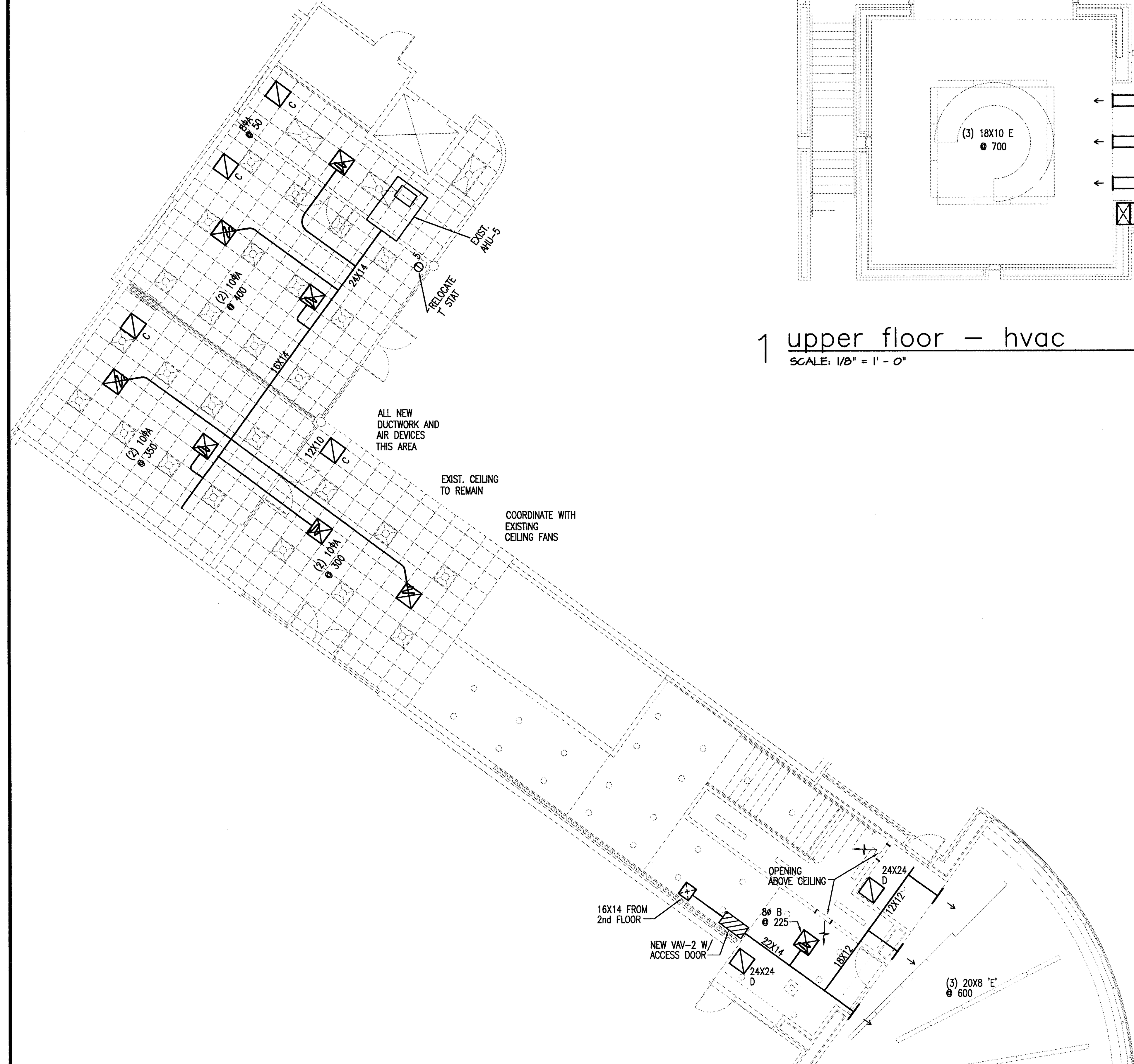

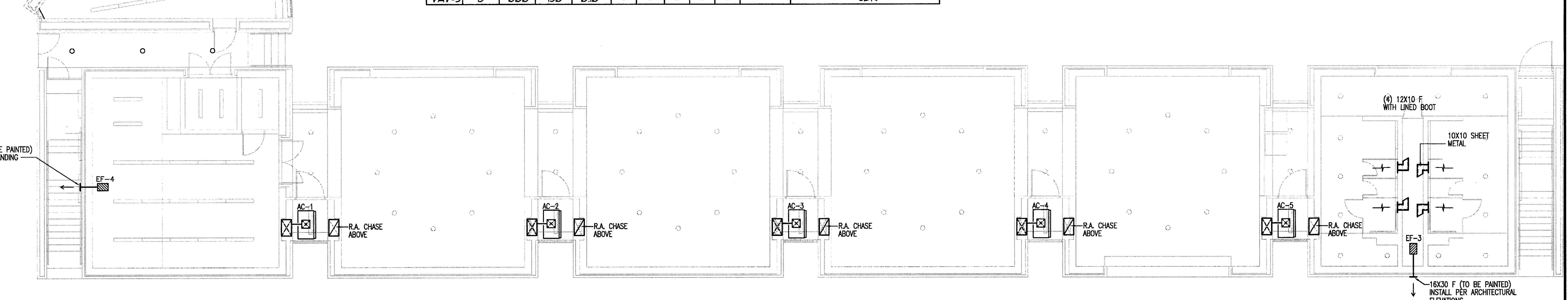

2 lower floor – hvac
SCALE: 1/8" = 1' - 0"

ISSUE DATE
FEB. 20, 2002
REVISIONS

ADDISON ATHLETIC CLUB EXPANSION
AND
LEISURE POOL
ADDISON, TEXAS

RON HOBBS ARCHITECTS
614 W. MAIN ST. SUITE #200 GARLAND, TEXAS 75040
(972) 494-0174 FAX (972) 494-0722

Halff Associates, Inc.
ENGINEERS • SCIENTISTS • SURVEYORS
8616 NORTHWEST PLAZA DRIVE
DALLAS TEXAS 75225
(214) 346-6200
AVO# 19468

STATE OF TEXAS
ALAN N. JENSEN
20377
REGISTERED PROFESSIONAL ENGINEER

JOB NUMBER
0012

SHEET NAME
HVAC PLAN
SHEET NUMBER
M101

GENERAL COORDINATION NOTES - ELECTRICAL

1. CONTRACTORS SHALL VISIT SITE AND PERFORM A THOROUGH EVALUATION OF EXISTING CONDITIONS AND REVIEW THESE PLANS & SPECIFICATIONS PRIOR TO SUBMITTING A FINAL BID. NOTIFY THE ARCHITECT OF ANY SIGNIFICANT DISCREPANCIES BETWEEN EXISTING CONDITIONS AND/OR THESE DOCUMENTS. CONTACT THE ARCHITECT OR THE ENGINEER IF FURTHER DIRECTION IS REQUIRED ON ANY ITEM.
2. THESE PLANS ARE BASED ON INFORMATION FROM OTHERS AND/OR EXISTING BUILDING DRAWINGS. THESE DOCUMENTS ARE DIAGRAMMATIC AND SCHEMATIC IN NATURE AND DO NOT SHOW EVERY DETAIL REQUIRED FOR CONSTRUCTION. FINAL BID SHALL INCLUDE ALL DEVICES, APPURTENANCES, WIRING, ETC. FOR FULLY FUNCTIONAL, CODE COMPLIANT SYSTEMS. COORDINATE WORK WITH OTHER TRADES AND PERFORM IN A FIRST-CLASS AND WORKMANLIKE MANNER.
3. THE ELECTRICAL CONTRACTOR SHALL COORDINATE ELECTRICAL AND TELEPHONE SERVICE LOCATIONS & PROVISIONS WITH ACTUAL FIELD CONDITIONS. FINAL EQUIPMENT LOCATIONS AND SERVICE POINTS SHALL BE COORDINATED WITH THE RESPECTIVE UTILITY COMPANIES. LOCATIONS SHOWN WERE OBTAINED THROUGH EXISTING DOCUMENTS AND PRELIMINARY DISCUSSIONS WITH UTILITY REPRESENTATIVES AND SHALL BE CONSIDERED ASSUMED.
4. IT IS THE ELECTRICAL CONTRACTOR'S RESPONSIBILITY TO PROVIDE ALL MATERIALS AND LABOR REQUIRED TO INSTALL FULLY FUNCTIONAL SYSTEMS IN ACCORDANCE WITH THE INTENT DISPLAYED IN THESE DOCUMENTS.
5. CONTRACTOR SHALL BALANCE PANEL PHASE LOADS PER LOCAL CODE AND TRADE STANDARDS.
6. REFER TO LATEST ARCHITECTURAL DRAWINGS FOR REFERENCED AND APPLICABLE ELECTRICAL DETAILS FOR FINAL LOCATIONS AND HEIGHTS OF LUMINARIES, RECEPTACLES, DATA OUTLETS, ELECTRICAL EQUIPMENT, AND OTHER DEVICES. IF ANY DETAILS ARE DUPLICATED AND/OR DISCREPANCIES BETWEEN DOCUMENTS CONTRACTOR SHALL VERIFY CORRECT APPLICATION WITH ARCHITECT.
7. ADJACENT SWITCHES, OUTLETS, AND OTHER DEVICES SHALL BE GANGED UNDER A COMMON COVERPLATE WHEREVER POSSIBLE. WHEN NOT POSSIBLE, INSTALL MULTIPLE COVERS AND DEVICES IN STRAIGHT HORIZONTAL OR VERTICAL LINES AS APPROPRIATE.
8. ALL CONDUIT SHALL BE RUN ORTHOGONAL TO BUILDING STRUCTURE AND ABOVE CEILINGS OR HIDDEN FROM VIEW WHEREVER POSSIBLE. WHERE NOT POSSIBLE, IT SHALL BE RUN PARALLEL WITH NEARBY STRUCTURE OR FEATURES TO BLEND IN. PAINT TO MATCH BACKGROUND. CONTACT ARCHITECT FOR DIRECTION.
9. E.C. SHALL VERIFY FINAL LOCATIONS FOR FIRE ALARM, SECURITY, SOUND & BELL, AND OTHER SPECIAL SYSTEMS PRIOR TO ROUGH-IN. COORDINATE REQUIREMENTS WITH RESPECTIVE SUB-CONTRACTORS.
10. FLOOR BOXES SHALL BE FLUSH MOUNTED WITH BRASS COVER PLATES SIMILAR TO WALKER SERIES 880 FLOOR BOXES, U.N.O. PROVIDE SUBMITTAL FOR ARCHITECT'S APPROVAL.
11. THE ELECTRICAL CONTRACTOR SHALL, PRIOR TO FINAL BIDS AND/OR INITIAL JOB CONSTRUCTION, COORDINATE ALL HVAC, PLUMBING AND SPECIAL SYSTEM(S) EQUIPMENT WITH GENERAL CONTRACTOR AND OTHER TRADES. THE ELECTRICAL CONTRACTOR SHALL LOCATE, FURNISH AND INSTALL ALL DISCONNECTS, FUSES, CIRCUIT BREAKERS, PANELBOARDS, JUNCTION BOXES, ENCLOSURES, CONTACTORS, RELAYS, TIME CLOCKS, AUXILIARY SYSTEMS DEVICES, RECEPTACLES, LIGHTING FIXTURES WITH LAMPS, ALL BRANCH CIRCUIT AND CONTROL WIRING IN CONDUIT, AND ALL FINAL CONNECTIONS REQUIRED TO MAKE THESE SYSTEMS FULLY FUNCTIONAL.

GENERAL NOTES - SPECIAL SYSTEMS

1. CONTRACTORS SHALL VISIT SITE AND PERFORM A THOROUGH EVALUATION OF EXISTING CONDITIONS. NOTIFY THE ARCHITECT OF ANY SIGNIFICANT CODE ISSUES OR CONCERNS/DISCREPANCIES OF EXISTING SYSTEMS. CONTACT THE ARCHITECT IF FURTHER DIRECTION IS REQUIRED ON ANY ITEM.
2. FIRE ALARM SYSTEM SHALL BE DESIGN/BUILD BY A FIRE ALARM SUB-CONTRACTOR. CONTRACTOR SHALL BE LICENSED BY THE STATE AND HAVE A MINIMUM OF 5 YEARS DIRECT LOCAL EXPERIENCE. SYSTEM SHALL COMPLY WITH THE N.F.P.A., N.E.C., ALL LOCAL CODES AND INTERFACE WITH EXISTING SYSTEM. THE SPRINKLER CONTRACTOR SHALL BE RESPONSIBLE FOR SUBMITTING THE DESIGN PACKAGE TO THE FIRE MARSHAL AND AUTHORITY HAVING JURISDICTION FOR APPROVAL AND ULTIMATELY OBTAINING A C.O.
3. COORDINATE PUBLIC ADDRESS SYSTEM, AUDIO SYSTEM, AND CABLE SYSTEM WITH OWNER/ARCHITECT. NO 90 DEGREE BENDS ARE ALLOWED FOR ANY SPECIAL SYSTEM. CONDUIT SWEEPS SHALL BE IN ACCORDANCE WITH SYSTEM MANUFACTURER'S AND/OR CABLE SUPPLIERS RECOMMENDATIONS OR SPECIFICATIONS.

   A. PROVIDE "MUZAK" ONE SPEAKER IN EACH EXERCISE ROOM. EXTEND (ROUTE) CONDUITS BACK TO STORAGE CLOSET NEXT TO ELEVATOR ON FIRST FLOOR.

   B. PROVIDE PUBLIC ADDRESS (PA) ONE SPEAKER IN EXERCISE, CONTROL, AND LOUNGE AREAS. INCLUDE PROVISION FOR FOUR ADDITIONAL SPEAKERS IN POOL AREA (REFER TO SITE PLAN THIS SHEET), COORDINATE WITH OWNER. EXTEND (ROUTE) CONDUITS BACK TO MAIN ENTRY OF EXISTING BUILDING (FRONT DESK).

   C. EXTEND (ROUTE) CONDUIT FROM THE TWO CAMERAS (SHOWN ON SHEET E102) TO MAIN ENTRY (FRONT DESK).

   D. E.C. SHALL PROVIDE HARDWARE FOR BUZZER (ALERT) SYSTEM. BUZZERS ARE LOCATED AT EXIT-ONLY DOORS. AN ALERT SHALL NOTIFY STAFF AT MAIN DESK OR STAFF AREA IF SOMEONE GOES THROUGH THE EXIT-ONLY DOOR.
4. SECURITY SYSTEM SHALL BE DESIGN/BUILD BY A STATE LICENSED CONTRACTOR WITH A MINIMUM OF 5 YEARS EXPERIENCE IN THE BUSINESS. ANY DEVICES AND EQUIPMENT SHOWN SHALL BE USED AS A GUIDELINE ONLY. COORDINATE EXACT REQUIREMENTS WITH OWNER. PROVIDE ELECTRICAL AND MECHANICAL REQUIREMENTS TO THE ENGINEER, ARCHITECT, GENERAL CONTRACTOR, OR RESPECTIVE SUB-CONTRACTOR(S).
5. E.C. SHALL RUN CONTINUOUS, EMPTY CONDUIT WITH PULL STRING FROM DATA OUTLETS, EMPTY J-BOXES, ETC. UNLESS NOTED OTHERWISE. PROVIDE PROTECTIVE SLEEVE/BUSHING AT END OF STUB-OUT.
6. ALL EXTERIOR POOL LIGHTING SHALL BE CONTROLLED BY MULTI-CHANNEL TIME SWITCH. EACH CIRCUIT SHALL BE INDEPENDENTLY PROGRAMMABLE. LOCATE AT LIFEGUARD STATION.
7. TENNIS COURT LIGHTS SHALL BE OPERATED BY KEY/TIMER.

ELECTRICAL SYMBOLS

NOTE: ALL SYMBOLS MAY NOT APPEAR ON DRAWINGS

- INCANDESCENT/H.I.D. LIGHT FIXTURE
- EXIT SIGN
- FLUORESCENT LIGHT FIXTURE
- EMERGENCY/NIGHT LIGHT FIXTURE(S) – NOT SWITCHED. (EMERGENCY PROVIDE BATTERY BACK-UP)
- SIMPLEX RECEPTACLE
- DUPLEX RECEPTACLE
- POWER RECEPTACLE, SINGLE PHASE, 208/230 VOLT
- QUAD-PLEX RECEPTACLE
- $ SINGLE POLE SWITCH
- $₂ TWO POLE SWITCH
- $₃ THREE WAY SWITCH
- $₄ FOUR WAY SWITCH
- $D DIMMER SWITCH
- $M MOTOR RATED SWITCH
- $P SINGLE POLE SWITCH WITH PILOT LIGHT
- $a SINGLE POLE SWITCH – LOWER CASE LETTER(S) "a, b, c ETC." DENOTES DESIGNATED SWITCH ASSIGNMENT
- UNFUSED DISCONNECT SWITCH
- FUSED DISCONNECT SWITCH
- JUNCTION BOX
- FLOOR BOX WITH RECEPTACLE OR AS NOTED
- FLOOR BOX WITH RECEPTACLE AND TEL/DATA VERIFY EXACT DEVICE REQUIREMENTS
- TELEPHONE OUTLET
- COMBINATION TELEPHONE & DATA OUTLET
- 2 GANG COMBINATION TELEPHONE & DATA OUTLET WITH 2 DATA JACKS
- DATA/COMMUNICATION OUTLET WITH ONE JACK
- DATA/COMMUNICATION OUTLET WITH TWO JACKS – MAX. 4 JACKS IN 2 GANG BOX WITH 1 COVER PLATE
- TELEVISION /VIDEO OUTLET–VERIFY WITH OWNER/VENDOR
- SP MUZAK SPEAKER AT CEILING
- PA PUBLIC ADDRESS SPEAKER AT CEILING
- B BUZZER AND/OR CONTACT LOCATION

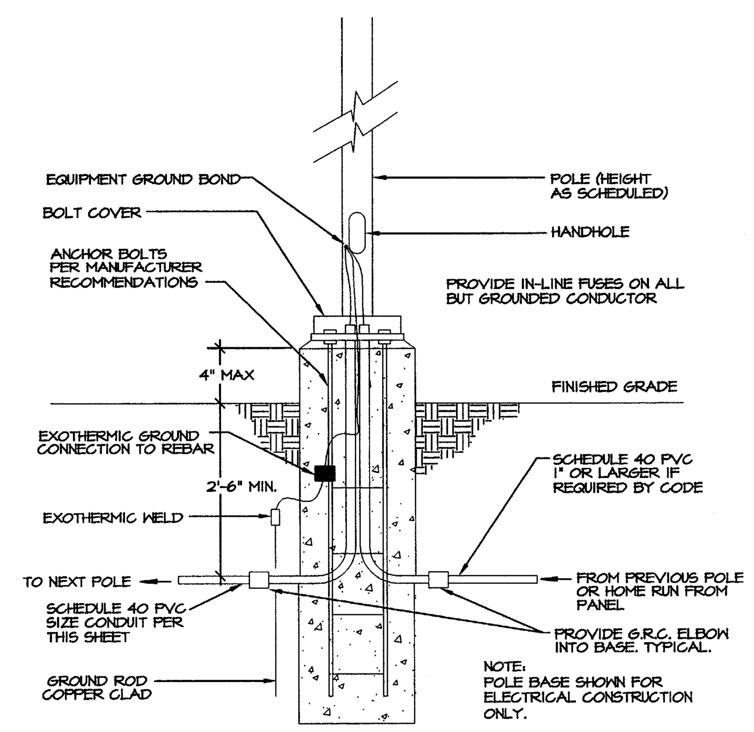

5 pavilion plan
NO SCALE

LOUIS POULSEN:
NYP–MAX–459(WHITE)–100W.M.H.–12" CORD WITH MOUNTING KIT FOR WET LOCATION

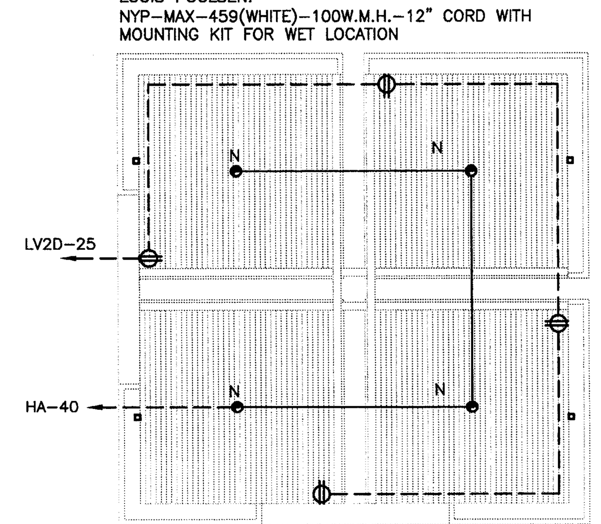

4 pavilion plan (alternate #4)
1/8"=1'-0"

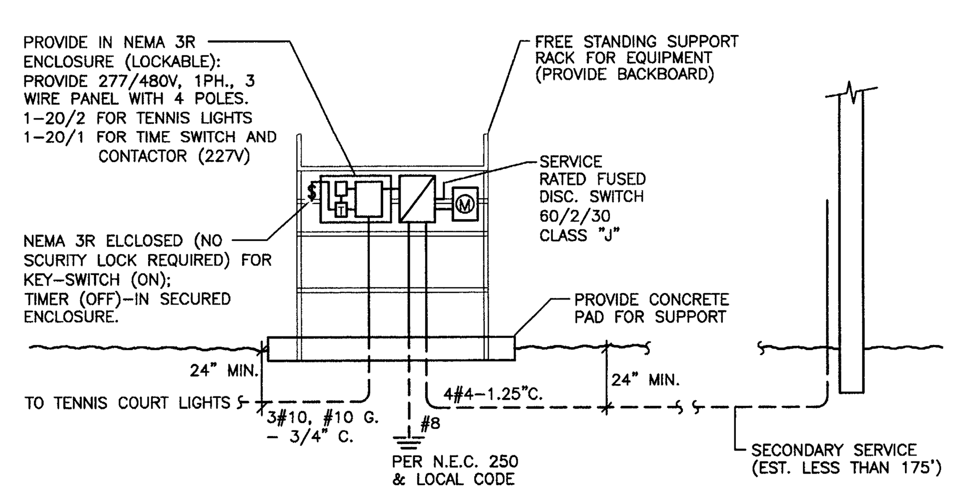

3 teninis court electrical service
1"=30'-0"

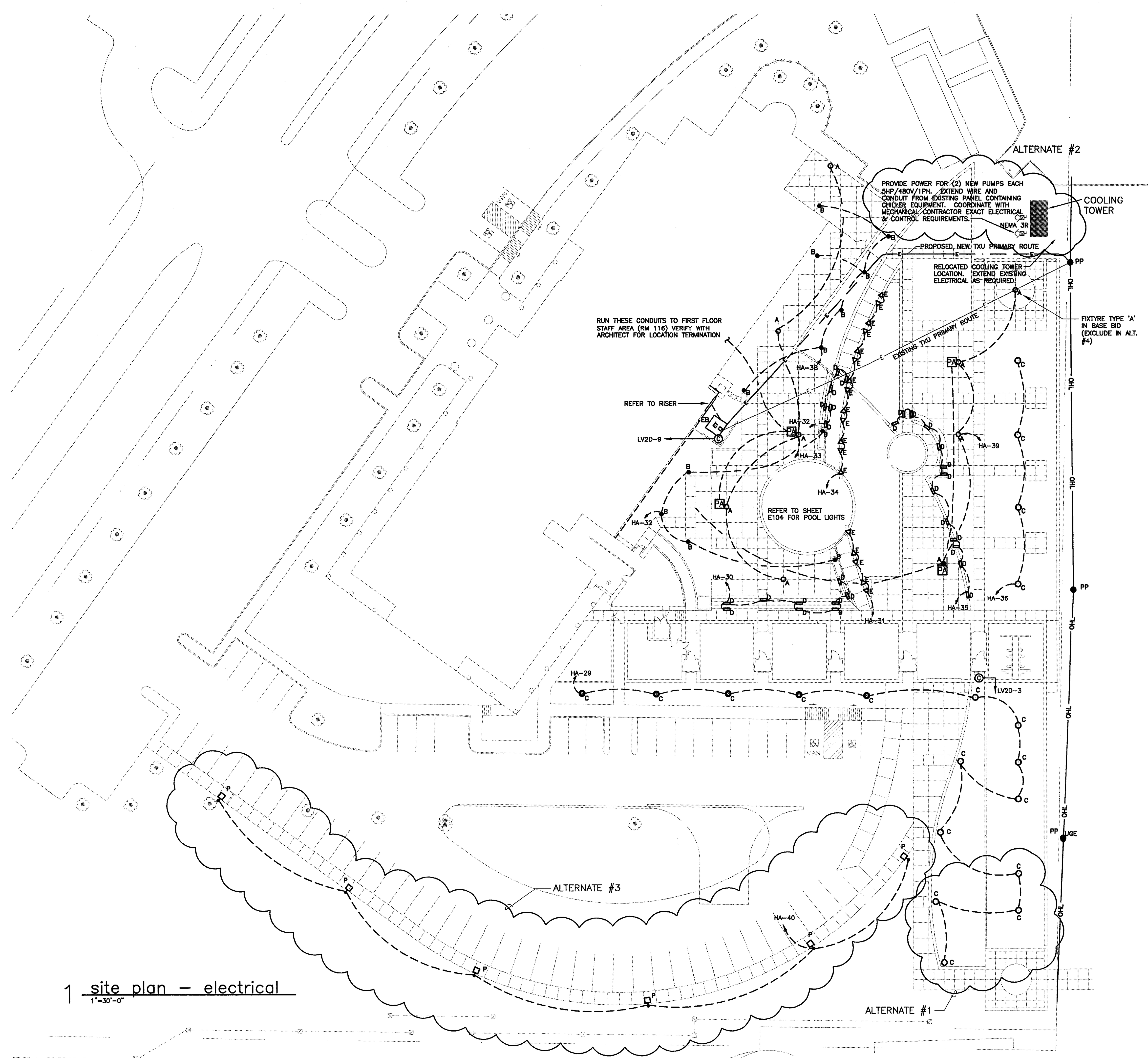

1 site plan – electrical
1"=30'-0"

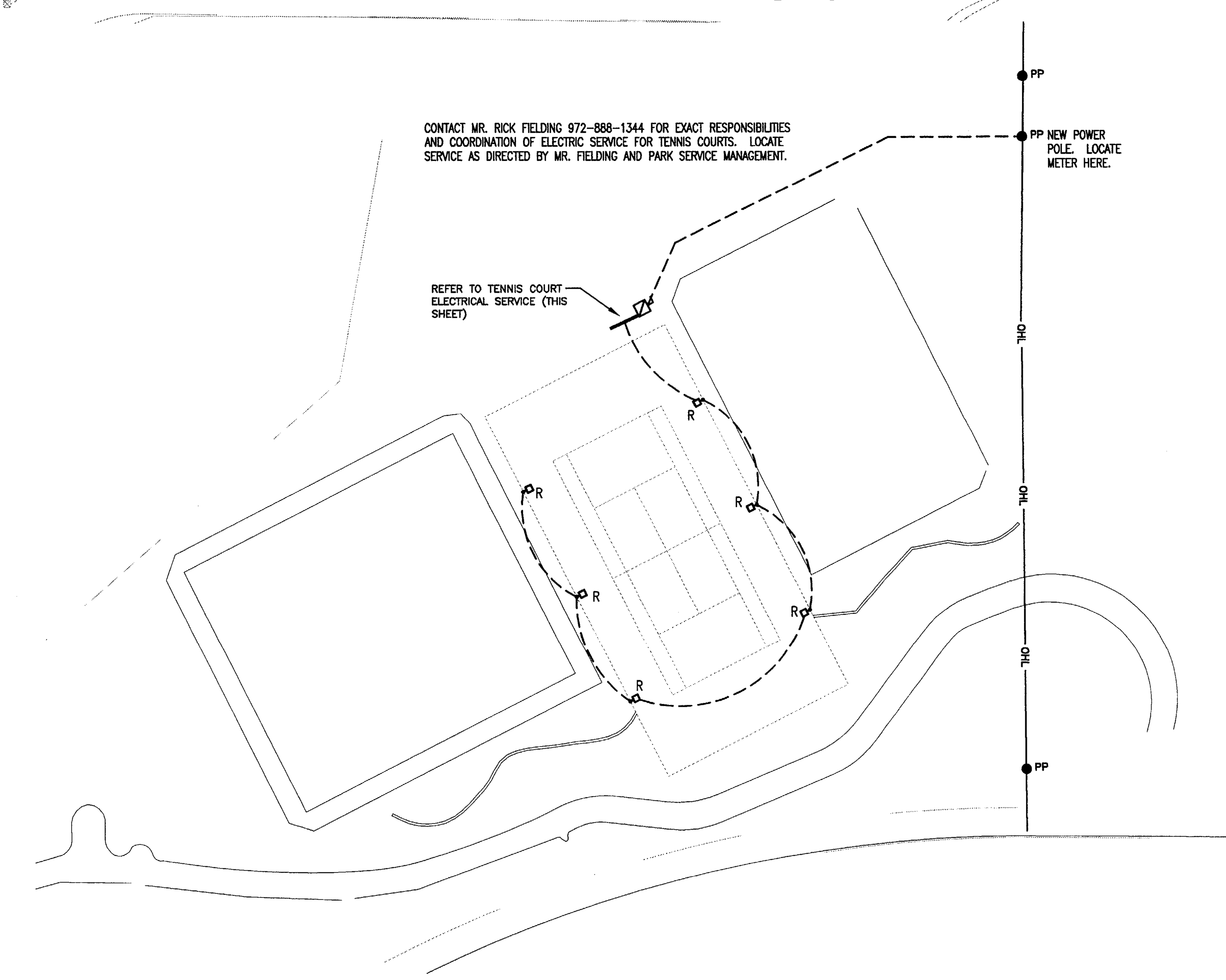

2 court plan – electrical (alternate #5)
1"=30'-0"

ISSUE DATE
FEB. 20, 2002

REVISIONS

ADDISON ATHLETIC CLUB EXPANSION AND LEISURE POOL
ADDISON, TEXAS

RON HOBBS ARCHITECTS
614 W. MAIN ST. SUITE #200 GARLAND, TEXAS 75040
(972) 494-0174 FAX (972) 494-0722

Halff Associates, Inc.
ENGINEERS • SCIENTISTS • SURVEYORS
8616 NORTHWEST PLAZA DRIVE
DALLAS TEXAS 75225
(214) 346-6200
AVO# 19468

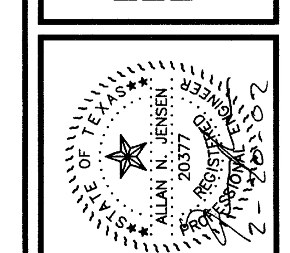

JOB NUMBER
0012

SHEET NAME
ELECTRICAL SITE PLAN

SHEET NUMBER
E100

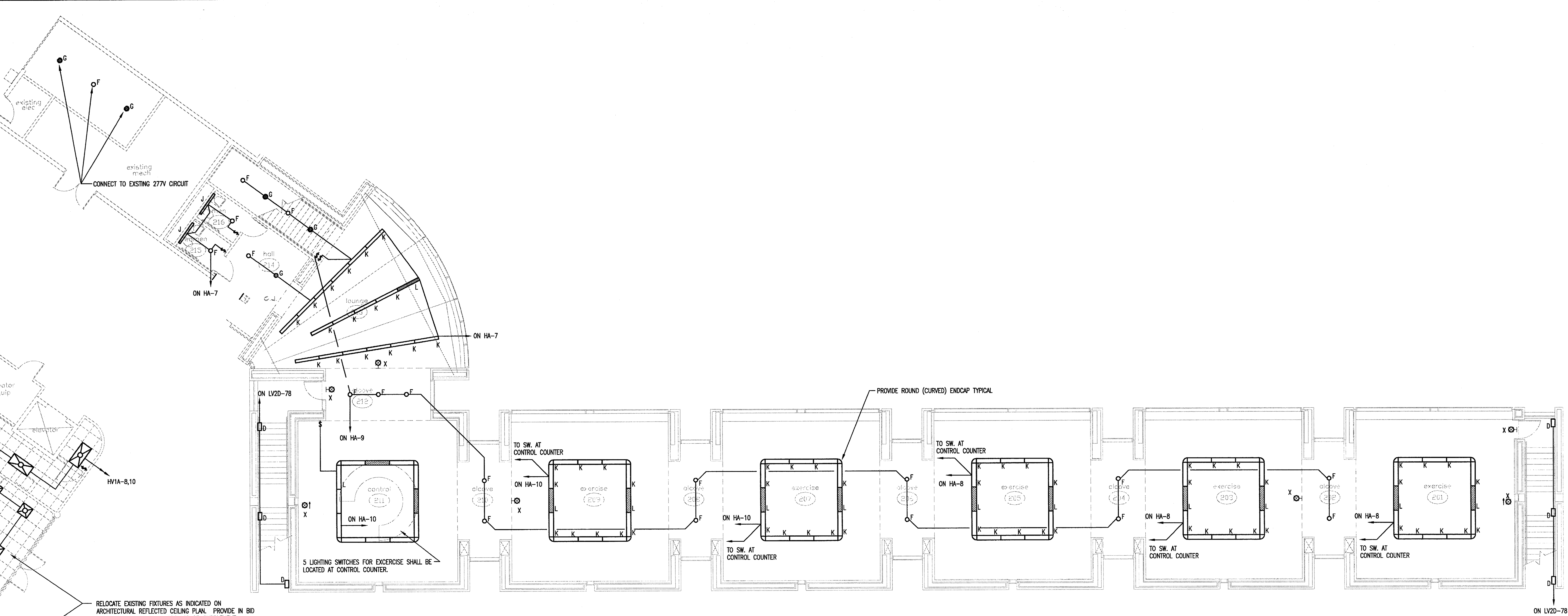

2 upper floor – lighting
SCALE: 1/8" = 1'-0"

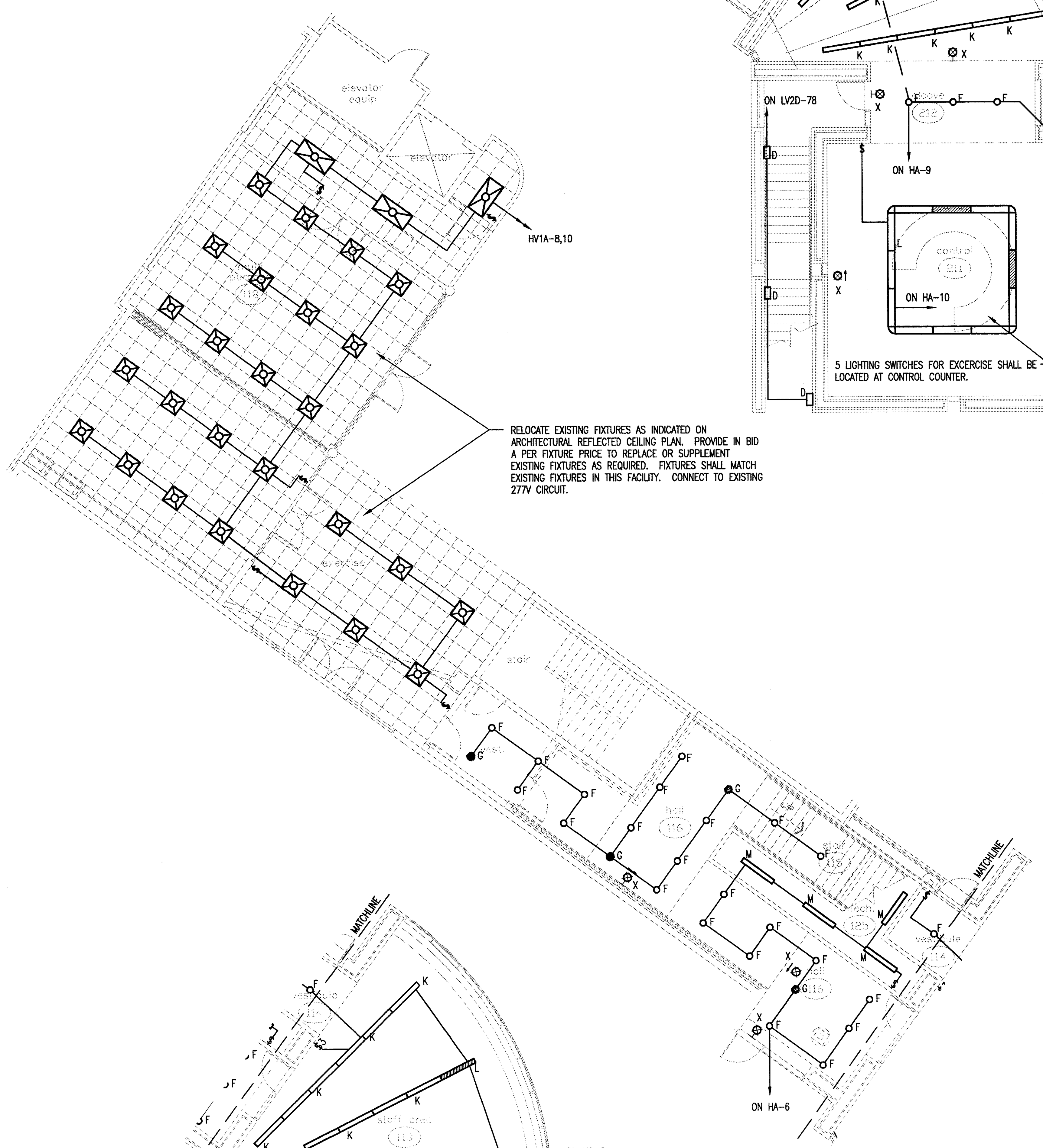

LIGHT FIXTURE SCHEDULE

TYPE	MANUFACTURER	LAMP TYPE	WATTS	VOLTS	MOUNTING	DESCRIPTION
A	LOUIS POULSEN NYP-471-WHITE/TRI-NYP-12-2-WHT	100MH	130	277	POLE	SITE LIGHTING
B	HYDRELL 9100-MH175/SPOT-XLT	175MH	175	277	GROUND	TREE UPLIGHT CAST IN CONCRETE, COLLAR – WHITE
C	LOUIS POULSEN NYHAVN, NYB-247-WHITE	100MH	100	277	BOLLARD	BOLLARD
D	BELFER 3435-WH-S8FL-13	13TT/35	130	277	RECESSED	STEP LIGHT WITH BATTERY BACK-UP
E	BK HP-TR-7-B2P-12-11-CPC-SE	100W	100	277	RECESSED	AQUADUCT LIGHT
F	EDISON PRICE TRP-42/8-120-COL-WF	42TT/35	50	277	RECESSED	DOWNLIGHT
G	EDISON PRICE TRP-42/8-120-COL-WF-EM	42TT/35	50	277	RECESSED	SAME WITH EMERGENCY BATTERY
H	KIRLIN RR80929-58	32TT/35	80	277	RECESSED	CONCRETE POUR DOWNLIGHT
I	LUMINAIRE LVP-524-232-OCT-LA-277	F32T8/35	70	277	SURFACE	VANDAL RESISTANT WALL
J	LUMINAIRE LVP-524-232-OCT-LA-EMB-277	F32T8/35	70	277	SURFACE	SAME WITH EMERGENCY BATTERY
K	FINELITE S5-XX-2T8-SC-91W-277-ACXXFE	F32T8/35	70	277	PENDANT	INDIRECT/DIRECT FLUORESCENT
L	FINELITE S5-XX-2T8-SC-91W-277-ACXXFE		70	277	PENDANT	SAME WITH BATTERY BACK-UP
M	HE WILLIAM 76-4-232-E277	F32T8/35	70	277	SURFACE	FLUORESCENT STRIP
N	LOUIS POULSEN NYP-MAX-459-100WMH.	100MH	130	277	PENDANT	PAVILLION (ALT #4)
P	STERNER ARS-RT-19-250MH-3-MT-BK-HS STERNER POLE SSS-20-4-11-10-BK	250HPS	310	277	POLE	SITE LIGHTING POLE FIXTURE (ALT #3)
Q	KIRLIN RR80929-45-FT	32TT/35	80	277	RECESSED	SHOWER (IN CONCRETE)
R	HUBBELL EVR-3-100MH-MT-GR-A/EVR4181GR	1000MH	130	277	POLE	TENNIS COURT POLES/FIXTURES (ALT #5)
S	HYDREL 818-362-9465	PAR 56	500	120	RECESSED	UNDER WATER
X	HUBBELL X3B SERIES (RED)					EXIT SIGN (POWERLESS)

NOTE: CROSS HATCHED FIXTURES DENOTE EMERGENCY LIGHTS. PROVIDE FIXTURE WITH 90-MINUTE BATTERY BACK-UP.

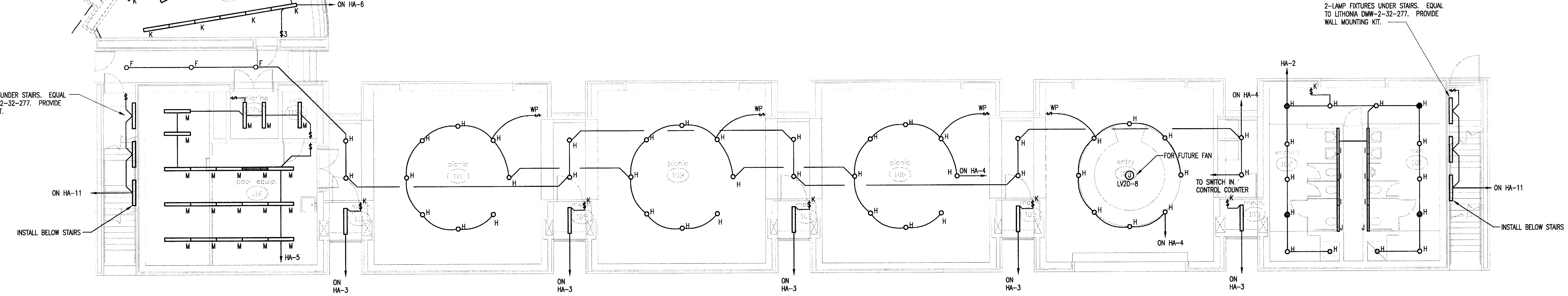

1 lower floor – lighting
SCALE: 1/8" = 1'-0"

ISSUE DATE
FEB. 20, 2002
REVISIONS

ADDISON ATHLETIC CLUB EXPANSION AND LEISURE POOL
ADDISON, TEXAS

RON HOBBS ARCHITECTS
614 W. MAIN ST. SUITE #200 GARLAND, TEXAS 75040
(972) 494-0174 FAX (972) 494-0722

Halff Associates, Inc.
ENGINEERS • SCIENTISTS • SURVEYORS

JOB NUMBER
0012

SHEET NAME
LIGHTING PLAN

SHEET NUMBER
E101

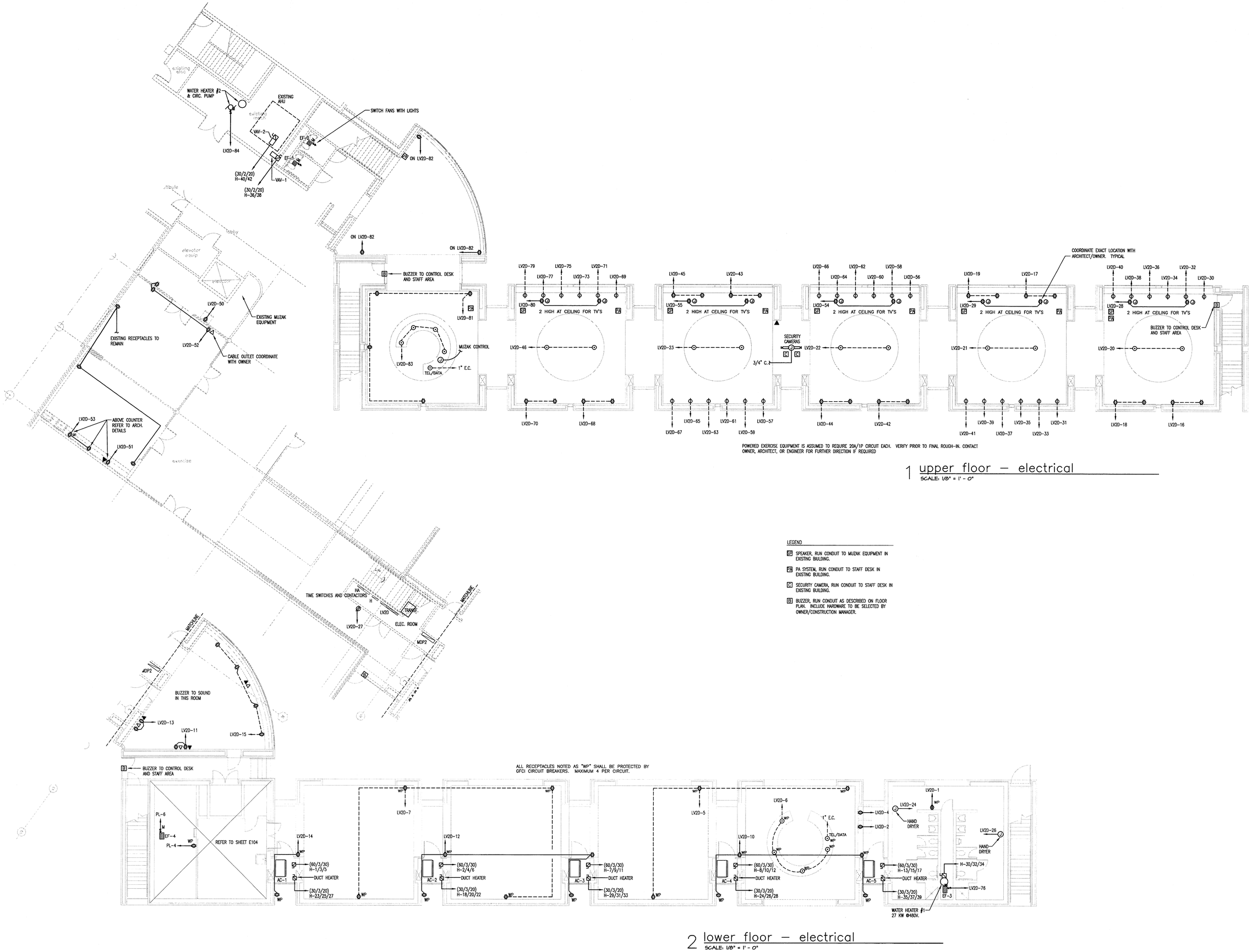

1 upper floor – electrical
SCALE: 1/8" = 1' - 0"

2 lower floor – electrical
SCALE: 1/8" = 1' - 0"

LEGEND

SP SPEAKER, RUN CONDUIT TO MUZAK EQUIPMENT IN EXISTING BUILDING.

PA PA SYSTEM, RUN CONDUIT TO STAFF DESK IN EXISTING BUILDING.

C SECURITY CAMERA, RUN CONDUIT TO STAFF DESK IN EXISTING BUILDING.

B BUZZER, RUN CONDUIT AS DESCRIBED ON FLOOR PLAN. INCLUDE HARDWARE TO BE SELECTED BY OWNER/CONSTRUCTION MANAGER.

ISSUE DATE
FEB. 20, 2002

REVISIONS

ADDISON ATHLETIC CLUB EXPANSION AND LEISURE POOL
ADDISON, TEXAS

RON HOBBS ARCHITECTS
614 W. MAIN ST. SUITE #200 GARLAND, TEXAS 75040
(972) 494-0174 FAX (972) 494-0722

Hall Associates, Inc.
ENGINEERS • SCIENTISTS • SURVEYORS
6060 NORTH CENTRAL EXPRESSWAY
DALLAS, TEXAS 75206
(214) 363-5200
FAX (214) 363-5660

JOB NUMBER
0012

SHEET NAME
ELECTRICAL PLAN

SHEET NUMBER
E102

PANELBOARD 'HA'

AVO#: 19468 | DATE: 01/01/02 | PROJECT: ADDISON ATHLETIC CENTER | LOCATION: ADDISON, TX

NOTES	DESCRIPTION	POLES & AMPS	LOAD VA LTG	LOAD VA RECEPT	LOAD VA OTHER	CKT	PH	CKT	LOAD VA LTG	LOAD VA RECEPT	LOAD VA OTHER	POLES & AMPS	DESCRIPTION	NOTES
LOCK-ON	NIGHT/EMER LIGHTING	1 - 20				1	A	2	1680			1 - 20	RESTROOM LTG	
	MECHANICAL RM LTG	1 - 20	500			3	B	4	3600			1 - 20	ENTRY/PICNIC LTG	
	POOL EQUIP. LTG	1 - 20	1400			5	C	6	2400			1 - 20	STAFF AREA/HALLWAY LTG	
	LOUNGE/HALL LTG	1 - 20	2380		200	7	A	8	2520			1 - 20	EXERCISE LTG	
	SPARE	1 - 20				9	B	10	2520			1 - 20	EXERCISE LTG	
	STAIR LIGHTS	1 - 20	780			11	C	12				1 - 20	SPARE	
	SPARE	1- 20				13	A	14				1 - 20	SPARE	
	SPARE	1- 20				15	B	16				1 - 20	SPARE	
	SPARE	1- 20				17	C	18				1 - 20	SPARE	
	SPARE	1 - 20				19	A	20				1 - 20	SPARE	
	SPARE	1 - 20				21	B	22				1 - 20	SPARE	
	SPACE	1 - 20				23	C	24				1 - 20	SPACE	
	SPACE	1 - 20				25	A	26				1 - 20	SPACE	
	SPACE	1 - 20				27	B	28				1 - 20	SPACE	
	BOLLARD LIGHTS	1 - 20	500			29	C	30	1125			1 - 20	WALL LIGHT	
	DOWNLIGHTS	1 - 20	625			31	A	32	1100			1 - 20	TREE UPLIGHT	
	POLE LIGHT	1 - 20	1320			33	B	34	1510			1 - 20	DOWNLIGHTS	
	WALL LIGHT	1 - 20	1625			35	C	36	400			1 - 20	BOLLARD LIGHT	
	WALL LIGHT	1 - 20	750			37	A	38	1570			1 - 20	PARKING LIGHTING	
	POLE LIGHT	1 - 20	880			39	B	40	500			1 - 20	PAVILION	
	SPARE	1 - 20				41	C	42	154			1 - 20	TREE UPLIGHT	

LOAD SUMMARY	CONN KVA	CONN AMPS	N.E.C. DIVERSITY	DIV. KVA	DIV. AMPS
1. LIGHTING	29.8	35.9	1.25	37.3	44.9
2. RECEPTACLES			#220-13		
3. MOTORS			1.00		
4			1.00		
5. WATER HEATING			1.00		
6. OTHER			1.00		
TOTALS	29.8	35.9	1.00	37.3	44.9

NOTES: (CONDUCTORS ARE NOTE #1 U.N.O.)
1. 2#10, #10 G.- 3/4" C.
2. 3#6, #8 G. 1" C.
3.
4.
5.

POLES	42	BUSS	COPPER	PANEL AMPS (DIV.)	45
SIZE	100 AMP	BRKR TYPE	BOLT-IN	CONNECTED LOAD PER PHASE (KVA):	
MAINS	MLO	MOUNTING	SURFACE		
VOLTS/PHASE	277/480VOLTS			PHASE A	10.8
PHASE/WIRE	3 PHASE / 4 WIRE			PHASE B	10.8
A.I.C.	65KAIC			PHASE C	8.4

PANELBOARD 'LV2D'

AVO#: 19468 | DATE: 01/01/02 | PROJECT: ADDISON ATHLETIC CENTER | LOCATION: ADDISON, TX

NOTES	DESCRIPTION	POLES & AMPS	LOAD VA LTG	LOAD VA RECEPT	LOAD VA OTHER	CKT	PH	CKT	LOAD VA LTG	LOAD VA RECEPT	LOAD VA OTHER	POLES & AMPS	DESCRIPTION	NOTES
LOCK-ON	RESTROOM RECEPT	1 - 20		180		1	A	2		1200		1 - 20	VENDING MACHINE	
	IRRIGATION CONTRL	1 - 20		180		3	B	4		1200		1 - 20	VENDING MACHINE	
	RECEPTACLES	1 - 20		540		5	C	6		1600		1 - 20	COUNTER RECEPT	
	RECEPTACLES	1 - 20		720		7	A	8		180		1 - 20	FUTURE FAN	
	IRRIGATION CONTRL	1 - 20		180		9	B	10		720		1 - 20	MECHANICAL RM RECEPT	
	RECEPTACLES	1 - 20		800		11	C	12		720		1 - 20	MECHANICAL RM RECEPT	
	RECEPTACLES	1 - 20		800		13	A	14		360		1 - 20	MECHANICAL RM RECEPT	
	RECEPTACLES	1 - 20		720		15	B	16		1600		1 - 20	EXERCISE EQUIP. RECEPT	
	EXERCISE EQUIP. RECEPT	1 - 20		1600		17	C	18		1600		1 - 20	EXERCISE EQUIP. RECEPT	
	EXERCISE EQUIP. RECEPT	1 - 20		1600		19	A	20		1600		1 - 20	EXERCISE EQUIP. RECEPT	
	EXERCISE EQUIP. RECEPT	1 - 20		1600		21	B	22		1600		1 - 20	EXERCISE EQUIP. RECEPT	
	EXERCISE EQUIP. RECEPT	1 - 20		1600		23	C	24		1600		1 - 20	HAND DRYER	
	PAVILION RECEPTACLES	1 - 20		720		25	A	26		1600		1 - 20	HAND DRYER	
	RECEPTACLES	1 - 20		180		27	B	28		360		1 - 20	TV	
	TV	1 - 20		360		29	C	30		1200		1 - 20	EXERCISE EQUIP. RECEPT	
	EXERCISE EQUIP. RECEPT	1 - 20		1200		31	A	32		1200		1 - 20	EXERCISE EQUIP. RECEPT	
	EXERCISE EQUIP. RECEPT	1 - 20		1200		33	B	34		1200		1 - 20	EXERCISE EQUIP. RECEPT	
	EXERCISE EQUIP. RECEPT	1 - 20		1200		35	C	36		1200		1 - 20	EXERCISE EQUIP. RECEPT	
	EXERCISE EQUIP. RECEPT	1 - 20		1200		37	A	38		1200		1 - 20	EXERCISE EQUIP. RECEPT	
	EXERCISE EQUIP. RECEPT	1 - 20		1200		39	B	40		1200		1 - 20	EXERCISE EQUIP. RECEPT	
	EXERCISE EQUIP. RECEPT	1 - 20		1200		41	C	42		1600		1 - 20	EXERCISE EQUIP. RECEPT	
	EXERCISE EQUIP. RECEPT	1 - 20		1600		43	A	44		1600		1 - 20	EXERCISE EQUIP. RECEPT	
	EXERCISE EQUIP. RECEPT	1 - 20		1600		45	B	46		1600		1 - 20	EXERCISE EQUIP. RECEPT	
	EXERCISE EQUIP. RECEPT	1 - 20		1600		47	C	48		1600		1 - 20	EXERCISE EQUIP. RECEPT	
	EXERCISE EQUIP. RECEPT	1 - 20		1600		49	A	50			1000	1 - 20	REFRIGERATOR	
	COFFEE MAKER	1 - 20			1200	51	B	52		540		1 - 20	RECEPTACLES	
	RECEPTACLES	1 - 20		360		53	C	54		540		1 - 20	TV	
	TV	1 - 20		540		55	A	56		1200		1 - 20	EXERCISE EQUIP. RECEPT	
	EXERCISE EQUIP. RECEPT	1 - 20		1200		57	B	58		1200		1 - 20	EXERCISE EQUIP. RECEPT	
	EXERCISE EQUIP. RECEPT	1 - 20		1200		59	C	60		1200		1 - 20	EXERCISE EQUIP. RECEPT	
	EXERCISE EQUIP. RECEPT	1 - 20		1200		61	A	62		1200		1 - 20	EXERCISE EQUIP. RECEPT	
	EXERCISE EQUIP. RECEPT	1 - 20		1200		63	B	64		1200		1 - 20	EXERCISE EQUIP. RECEPT	
	EXERCISE EQUIP. RECEPT	1 - 20		1200		65	C	66		1200		1 - 20	EXERCISE EQUIP. RECEPT	
	EXERCISE EQUIP. RECEPT	1 - 20		1200		67	A	68		1600		1 - 20	EXERCISE EQUIP. RECEPT	
	EXERCISE EQUIP. RECEPT	1 - 20		1200		69	B	70		1600		1 - 20	EXERCISE EQUIP. RECEPT	
	EXERCISE EQUIP. RECEPT	1 - 20		1200		71	C	72		1600		1 - 20	EXERCISE EQUIP. RECEPT	
	EXERCISE EQUIP. RECEPT	1 - 20		1200		73	A	74		1600		1 - 20	EXERCISE EQUIP. RECEPT	
	EXERCISE EQUIP. RECEPT	1 - 20		1200		75	B	76			1180	1 - 20	EF-3	
	EXERCISE EQUIP. RECEPT	1 - 20		1200		77	C	78	90			1 - 20	STEP LIGHTS	
	EXERCISE EQUIP. RECEPT	1 - 20		1200		79	A	80		360		1 - 20	TV	
	RECEPTACLES	1 - 20		720		81	B	82		540		1 - 20	RECEPTACLES	
	COUNTER RECEPT	1 - 20		720		83	C	84			50	1 - 20	WATER HEATER PUMP	

LOAD SUMMARY	CONN KVA	CONN AMPS	N.E.C. DIVERSITY	DIV. KVA	DIV. AMPS
1. LIGHTING	0.1	0.3	1.25		
2. RECEPTACLES	87.2	242.3	#220-13	79.5	220.9
3. MOTORS	3.4	9.5	1.00		
4			1.00		
5. WATER HEATING			1.00		
6. OTHER			1.00		
TOTALS	90.8	252.1	1.00	79.5	220.9

NOTES: (CONDUCTORS ARE NOTE #1 U.N.O.)
1. 2#12, #12 G.- 1/2" C.
2. 2#10, #10 G. - 3/4" C.
3.
4.
5.

POLES	126	BUSS	COPPER	PANEL AMPS (DIV.)	382
SIZE	400 AMP	BRKR TYPE	BOLT-IN	CONNECTED LOAD PER PHASE (KVA):	
MAINS	400 AMP MCB	MOUNTING	SURFACE		
VOLTS/PHASE	120/208VOLTS			PHASE A	30.9
PHASE/WIRE	3 PHASE / 4 WIRE			PHASE B	29.3
A.I.C.	10KAIC			PHASE C	30.6

THIRD SECTION NOT SHOWN
NO ACTIVE BREAKERS
(12 SPARE AND 30 SPACES)

PANELBOARD 'H'

AVO#: 19468 | DATE: 01/01/02 | PROJECT: ADDISON ATHLETIC CENTER | LOCATION: ADDISON, TX

NOTES	DESCRIPTION	POLES & AMPS	LOAD VA LTG	LOAD VA EL. HEAT	LOAD VA OTHER	CKT	PH	CKT	LOAD VA LTG	LOAD VA EL. HEAT	LOAD VA OTHER	POLES & AMPS	DESCRIPTION	NOTES
		3			5817	1	A	2			5817	3		
2	AC-1				5817	3	B	4			5817		AC-2	2
		30			5817	5	C	6			5817	30		
		3			5817	7	A	8			5817	3		
2	AC-3				5817	9	B	10			5817		AC-4	2
		30			5817	11	C	12			5817	30		
		3			5817	13	A	14				1 - 20	SPARE	
2	AC-5				5817	15	B	16				1 - 20	SPARE	
		30			5817	17	C	18		4800		3		
	SPARE	1 - 20				19	A	20		4800			AC-2 DUCT HTR	
	SPARE	1 - 20				21	B	22		4800		20		
		3		4800		23	C	24		4800		3		
	AC-1 DUCT HTR			4800		25	A	26		4800			AC-4 DUCT HTR	
		20		4800		27	B	28		4800		20		
		3		4800		29	C	30			11250	3		
	AC-3 DUCT HTR			4800		31	A	32			11250		WATER HEATER	3
		20		4800		33	B	34			11250	50		
		3		4800		35	C	36		4155		2	VAV-1 ELEC. HT	
	AC-5 DUCT HTR			4800		37	A	38		4155		20		
		20		4800		39	B	40		4155		2	VAV-2 ELEC. HT	
	SPARE	1 - 20				41	C	42		4155		20		

LOAD SUMMARY	CONN KVA	CONN AMPS	N.E.C. DIVERSITY	DIV. KVA	DIV. AMPS
1. LIGHTING			1.25		
2. ELECTRIC HEAT	88.6	106.6	1.00	88.6	106.6
3. MOTORS	87.3	105.0	1.00	87.3	105.0
4. OTHER			1.00		
5. WATER HEATERS	33.8	40.6	1.00	33.8	40.6
6			1.00		
TOTALS	122.4	147.3	1.00	122.4	147.3

NOTES: (CONDUCTORS ARE NOTE #1 U.N.O.)
1. 3#12, #12 G.- 1/2" C.
2. 3#10, #10 G. 3/4" C.
3. 3#8, #10 G. 3/4" C.
4.
5.

POLES	42	BUSS	COPPER	PANEL AMPS (DIV.)	147
SIZE	200 AMP	BRKR TYPE	BOLT-IN	CONNECTED LOAD PER PHASE (KVA):	
MAINS	MLO	MOUNTING	SURFACE		
VOLTS/PHASE	277/480VOLTS			PHASE A	68.5
PHASE/WIRE	3 PHASE / 4 WIRE			PHASE B	68.5
A.I.C.	65KAIC			PHASE C	72.6

PANELBOARD 'PL'

AVO#: 19468 | DATE: 01/01/02 | PROJECT: ADDISON ATHLETIC CENTER | LOCATION: ADDISON, TX

NOTES	DESCRIPTION	POLES & AMPS	LOAD VA LTG	LOAD VA RECEPT	LOAD VA OTHER	CKT	PH	CKT	LOAD VA LTG	LOAD VA RECEPT	LOAD VA OTHER	POLES & AMPS	DESCRIPTION	NOTES
	POOL LIGHTS	1 - 20	1500			1	A	2	1700			1 - 20	POOL EQUIP RM LTG	
	POOL LIGHTS	1 - 20	1500			3	C	4		540		1 - 20	RECEPTACLE	
	PP8 - PUMP .75HP	1 - 20			1590	5	A	6			1180	1 - 20	EF-4	
	PP9 - PUMP .75HP	1 - 20			1590	7	C	8				1 - 20	SPARE	
	CHEMICAL CONTROLLER	1 - 20		180		9	A	10				1 - 20	SPARE	
	WATER CONTROLLER	1 - 20		180		11	C	12				1 - 20	SPARE	
	SPARE	1 - 20				13	A	14				1 - 20	SPARE	
	SPARE	1 - 20				15	C	16				1 - 20	SPARE	
	SPARE	1 - 20				17	A	18				1 - 20	SPARE	

LOAD SUMMARY	CONN KVA	CONN AMPS	N.E.C. DIVERSITY	DIV. KVA	DIV. AMPS
1. LIGHTING	4.7	22.6	1.25	5.9	28.2
2. RECEPTACLES	0.9	4.3	#220-13	0.9	4.3
3. MOTORS	4.4	21.0	1.00	4.4	21.0
4			1.00		
5. WATER HEATING			1.00		
6. OTHER			1.00		
TOTALS	10.0	47.9	1.00	11.1	53.5

NOTES: (CONDUCTORS ARE NOTE #1 U.N.O.)
1. 2#10, #10 G.- 3/4" C.
2.
3.
4.
5.

POLES	18	BUSS	COPPER	PANEL AMPS (DIV.)	13
SIZE	100 AMP	BRKR TYPE	BOLT-IN	CONNECTED LOAD PER PHASE (KVA):	
MAINS	MCB	MOUNTING	SURFACE		
VOLTS/PHASE	120/208VOLTS			PHASE A	4.8
PHASE/WIRE	1 PHASE / 3 WIRE				
A.I.C.	10KAIC			PHASE C	2.2

Motor Control Center 'MCC'

DESIGNATION & DESCRIPTION	CIRCUIT NO.	SERVES	HP OR KVA	FULL LOAD AMPS	CIRCUIT FRAME POLES/TRIP	STARTER SIZE	STARTER TYPE	WIRE & CONDUIT
	1	PP1-RECIRC. PUMP	20HP	27	60/3/50	2	FVNR	3#8, #10G. -3/4" C.
'MCC'	2	PP2-VORTEX PUMP	10HP	14	30/3/30	1	FVNR	3#10, #10G. -3/4" C.
	3	PP3-WTR FALL PUMP	15HP	21	60/3/40	2	FVNR	3#8, #10G. -3/4" C.
277/480V	4	PP4-HYDROTHERAPY PUMP	3HP	4.8	30/3/15	0	FVNR	3#12, #12 G. - 1/2" C.
3 PH, 4 W	5	PP5-WTR FEATURE PUMP	15HP	21	60/3/40	2	FVNR	3#8, #10G. -3/4" C.
	6	PP6-RECIRC. PUMP	7.5HP	11	30/3/30	1	FVNR	3#10, #10 G. -3/4" C.
	7	PP7-AIR BLOWER	3HP	4.8	30/3/15	0	FVNR	3#12, #12 G. - 1/2" C.
400 A	8	SPARE						
MLO	9	SPARE						
	10	PP10-BYPASS PUMP	5HP	7.6	30/3/15	0	FVNR	3#12, #12 G. - 1/2" C.
	11	TRANSF. T-PL	15KVA	31.3	60/2/40	--	–	3#8, #10G. -3/4" C.
	12							
	13							
	14							
65KAIC			TOTAL:	171	AMPS			

1. VERIFY HP PRIOR TO ORDER; PROVIDE EACH WITH H-O-A SWITCHES AND AMMETERS, AND REMOTE EQUIP. WITH PILOT LIGHTS
2. STARTER TYPES:
   1. FULL VOLTAGE, NON-REVERSING
   2. REDUCED VOLTAGE, WYE DELTA (FURNISHED WITH EQUIPMENT)
   3. REDUCED VOLTAGE, WYE DELTA
3. PROVIDE TWO SETS OF AUXILARY CONTACTS: 1-N.C. AND 1-N.O.

SUMMARY @480 VOLTS

	LIGHTING	RECEPTACLE	OTHER	POOL MOTORS	HVAC COOLING	WATER HEATING
TOTAL CONNECTED	39.3	88.7	15.8	111.3	91.6	33.8
N.E.C. DIVERSITY	1.00 #220-11	#220-13	1.00 + .25 L.M.	1.00	1.00	#220-32 (c) (3)
TOTAL DEMAND	39.3	80.8	15.8	111.3	91.6	33.8
DEMAND AMPS @ 277/480V, 3PH	47.3	97.2	19.0	133.9	110.2	40.6
SERVICES AMPS @ 277/480 VOLTS, 3 PHASE =	448.4	*SUMMARY REFLECTS LARGEST SEASONAL LOAD*				

LOAD SUMMARY PER N. E. C. 220-35
(ESTIMATED FOR DD DOCUMENTS)

$\frac{245\ (\text{KW Demand})}{.8\ (\text{Power Factor})} \times 1.25 = 341$ Exist. KVA

$\frac{341\ (\text{Exist.}) + 373\ (\text{KVA0})}{831\ (\text{Voltage})} = 860$ Amps

1. WIRE AND CONDUIT SIZES BASED ON 75 C RATED
2. WIRE AND CONNECTIONS AND TYPE 'THWN' WIRE.
3. TIME CLOCKS 24-HOUR/7-DAY – EQUAL TO INTERMATIC
4. AUTOMATIC TIME SWITCHES – EQUAL TO INTERMATIC
5. CONTACTORS EQUAL TO SQUARE D OR ALLEN BRADLEY

AVAILABLE FAULT CURRENT ESTIMATE:

Addison Athletic Center
Addison, Texas

Assumed Power Co. Transformer Size = 1500 KVA
Assumed Transformer Impedance = 3.0 %
(Verify with power company prior to ordering equipment)

Transformer Full Load Amps = 1804.2 Amps
Transformer Let-thru S.C. Current = F.L. Amps / Impedance
60141 Short Circuit Amps (@ xfmr)

Main Distribution @ Gutter:

$f = \frac{(\sqrt{3})*(15\ \text{feet})*(60141\ \text{SCA})}{5\ (\text{Cond./PH})*(20565\ \text{'C'})*(480\ \text{Volts L-L})} = 0.032$

$M = 1/(1+f) = 0.969$

Panel S.C. Current = SCA @ xfmr * M = 58295 A

Estimated A.F.C. at 800-amp F.D.S. = 58295 SCA (@ S.E.)
Fuse RMS let-thru (class "L" Time Delay) = 30000 SCA (@ S.E.)

Panel 'MDP2':

$f = \frac{(\sqrt{3})*(100\ \text{feet})*(30000\ \text{SCA})}{2\ (\text{Cond./PH})*(22185\ \text{'C'})*(480\ \text{Volts L-L})} = 0.244$

$M = 1/(1+f) = 0.804$

Estimated A.F.C. at Panel = **24116** SCA

Panel 'MCC':

$f = \frac{(\sqrt{3})*(50\ \text{feet})*(24116\ \text{SCA})}{1\ (\text{Cond./PH})*(22185\ \text{'C'})*(480\ \text{Volts L-L})} = 0.196$

$M = 1/(1+f) = 0.836$

Estimated A.F.C. at Panel = **20162** SCA

Panel 'H':

$f = \frac{(\sqrt{3})*(15\ \text{feet})*(20162\ \text{SCA})}{1\ (\text{Cond./PH})*(22185\ \text{'C'})*(480\ \text{Volts L-L})} = 0.049$

$M = 1/(1+f) = 0.953$

Estimated A.F.C. at Panel = **28593** SCA

Panel 'HA':

$f = \frac{(\sqrt{3})*(15\ \text{feet})*(28593\ \text{SCA})}{1\ (\text{Cond./PH})*(4760\ \text{'C'})*(480\ \text{Volts L-L})} = 0.325$

$M = 1/(1+f) = 0.755$

Estimated A.F.C. at Panel = **22639** SCA

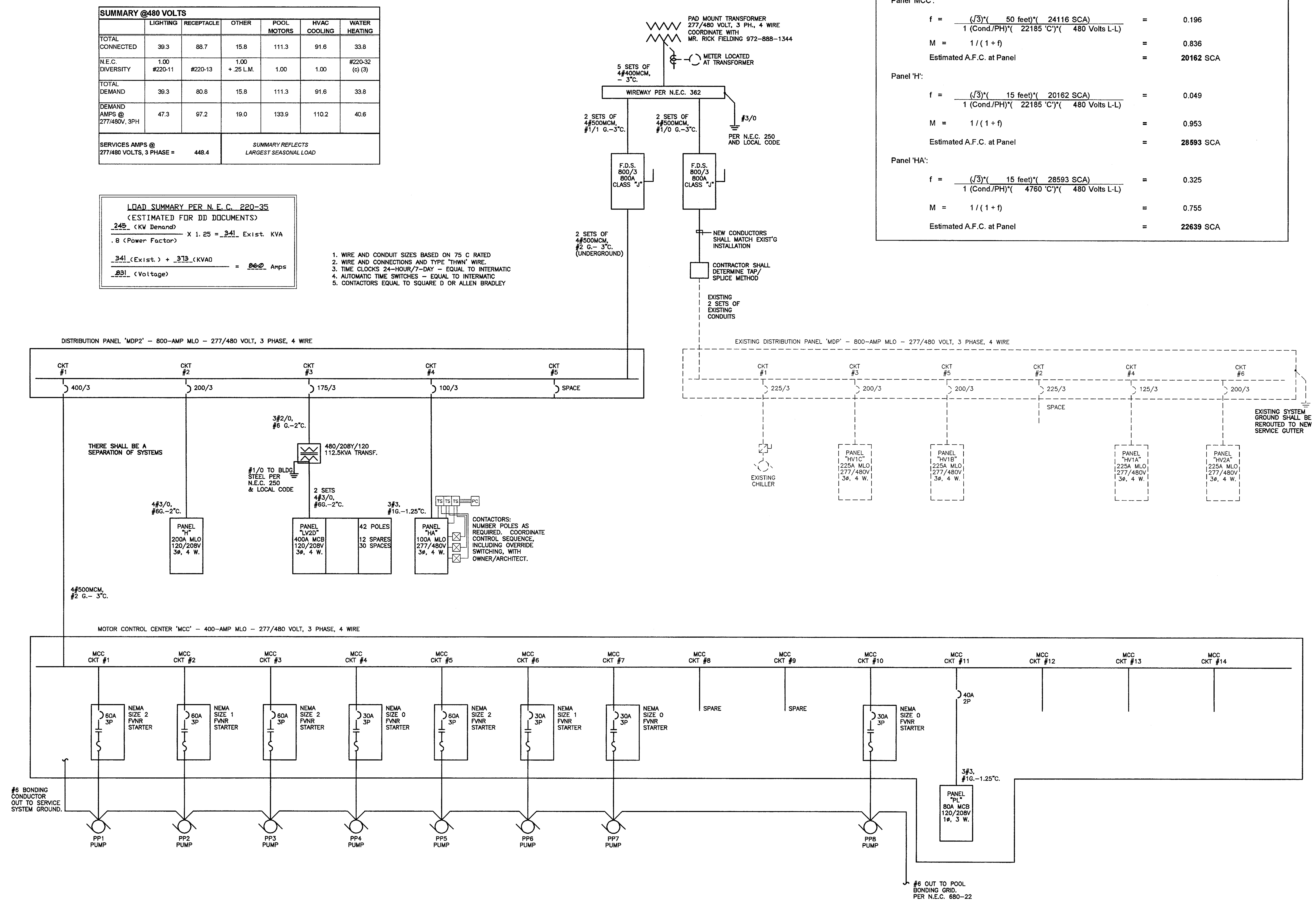

1 electrical one line diagram
NO SCALE

ISSUE DATE
FEB. 20, 2002

REVISIONS

ADDISON ATHLETIC CLUB EXPANSION AND LEISURE POOL
ADDISON, TEXAS

RON HOBBS ARCHITECTS
614 W. MAIN ST. SUITE #200 GARLAND, TEXAS 75040
(972) 494-0174 FAX (972) 494-0722

Halff Associates, Inc.
ENGINEERS • SCIENTISTS • SURVEYORS
8616 NORTHWEST PLAZA DRIVE
DALLAS TEXAS 75225
(214) 346-6200
AVO# 19468

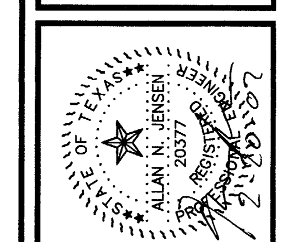

JOB NUMBER
0012

SHEET NAME
ELECTRICAL PANELS

SHEET NUMBER
E103

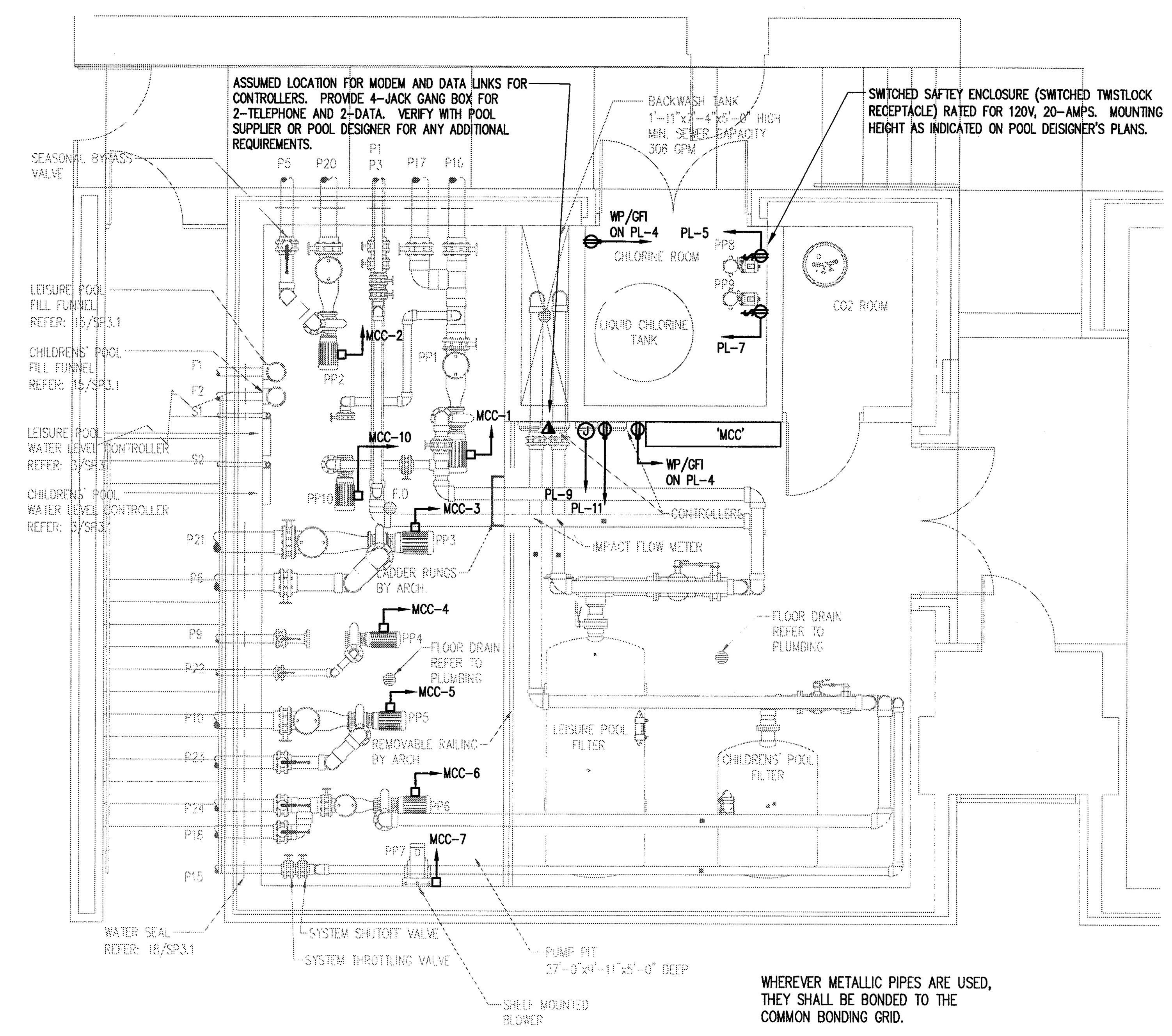

1 FILTER ROOM LAYOUT
SCALE: 1/4" = 1' - 0"

PUMP SCHEDULE				
		SPECIFICATIONS		
ID	DESCRIPTION	GPM	TDH	HP
PP1	LEISURE POOL RECIRCULATION PUMP	790	60	20
PP2	VORTEX PUMP	500	40	10
PP3	WATER FALL PUMP	750	40	15
PP4	LEISURE POOL HYDROTHERAPY PUMP	190	40	3
PP5	WATER FEATURE PUMP	1000	40	15
PP6	CHILDRENS POOL RECIRCULATION PUMP	250	60	7.5
PP7	AIR BLOWER	70 SCFM @ 75" H20		3
PP8	STENNER CHEMICAL PUMP	–	–	–
PP9	STENNER CHEMICAL PUMP	–	–	
PP10	SEASONAL RECIRCULATION BYPASS PUMP	200	60	5

NOTES:

1. REMOTE START/STOP FOR LEISURE POOL FEATURE PUMPS LOCATED IN NATATORIUM OFFICE.
2. PROVIDE RELAYS BETWEEN WATER FEATURE PUMPS AND LIFE GUARD ROOM. PROVIDE RELAY FOR AIR BLOWER IN LIFEGUARD ROOM. VERIFY TYPE OF RELAY(S) REQUIRED BY POOL DESIGNER.
3. PROVIDE GFCI PROTECTED CIRCUIT AND DUPLEX RECEPTACLE FOR WATER LEVEL CONTROLLER. REFER TO POOL DESIGNER'S DRAWINGS FOR EXACT LOCATIONS (TYPICAL OF TWO).
4. PROVIDE DEDICATED CIRCUIT FOR CHEMICAL CONTROL UNIT. REFER TO POOL DESIGNER'S DRAWINGS FOR EXACT LOCATIONS (TYPICAL OF TWO).
5. PH BALANCE ROOM: PROVIDE ROUGH–IN CONDUIT AND J–BOX(ES) WITH PULL CORD FOR FUTURE PUMPS. REFER TO POOL DESIGNER'S DRAWINGS FOR FUTURE PUMP LOCATIONS.
6. THE CHEMICAL CONTROLLER UNIT(S) WILL HAVE MODEM CAPABILITIES. COORDINATE PHONE LINE(S) WITH OWNER.
7. PROVIDE ALLOWANCE FOR 6 GFCI OUTLETS FOR VACUUM CLEANER. LOCATIONS OF OUTLETS SHALL BE COORDINATED WITH OWNER AND POOL DESIGNER. LOCATIONS SHALL COMPLY WITH N.E.C. 680–5; 680–6.
8. E.C. SHALL OBTAIN FROM POOL DESIGNER A COMPLETE LIST OF EQUIPMENT NOTING HP/FLA VOLTAGE REQUIREMENTS. LIST SHALL INCLUDE ALL PERTINENT ITEMS REQUIRING ELECTRICAL CONNECTION OR ROUGH–IN TO PROVIDE A COMPLETE AND FULLY FUNCTIONAL SYSTEM.
9. POOL EQUIPMENT LIGHTING, AND NON–RELATED EQUIPMENT WITHIN 20FT. OF POOL SHALL BE INSTALLED IN STRICT ACCORDANCE WITH N.E.C. 680, SECTIONS A AND B. AND LOCAL CODE. CONTACT ENGINEER WITH ANY QUESTIONS.

   A. ALL METAL PARTS AND EQUIPMENT ASSOCIATED WITH THE POOLS AND AQUEDUCT ARE TO BE BONDED TOGETHER AS REQUIRED BY ARTICLE 680–22 OF THE N.E.C.

   B. BOND POOLS TOGETHER BY REINFORCING BAR GRIDS AND #6 COPPER.

   C. PROVIDE GFCI PROTECTION FOR ALL POOL LIGHTING AND POOL EQUIPMENT CIRCUITS AND FOR ANY GENERAL RECEPTACLES WITHIN 20 FT. OF POOL OR AQUEDUCT WALLS.

   D. LIGHT FIXTURES SHALL BE LOCATED 18" BELOW WATER LEVEL, OR SHALL BE LISTED FOR HIGHER LOCATIONS.

   E. CONDUIT TO WET–NICHE FIXTURES SHALL BE BRASS OR CORROSION RESISTANT MATERIAL. NON–METALLIC CONDUIT SHALL INCLUDE #8 INSULATED CU GROUND WIRE.

   F. WIRING METHODS SHALL BE LISTED FOR SPECIFIC USE AND APPROVED BY LOCAL AUTHORITIES.

   G. GFCI – PROTECTED CONDUCTORS SHALL NOT SHARE CONDUIT WITH NON–GFCI PROTECTED CONDUCTORS.

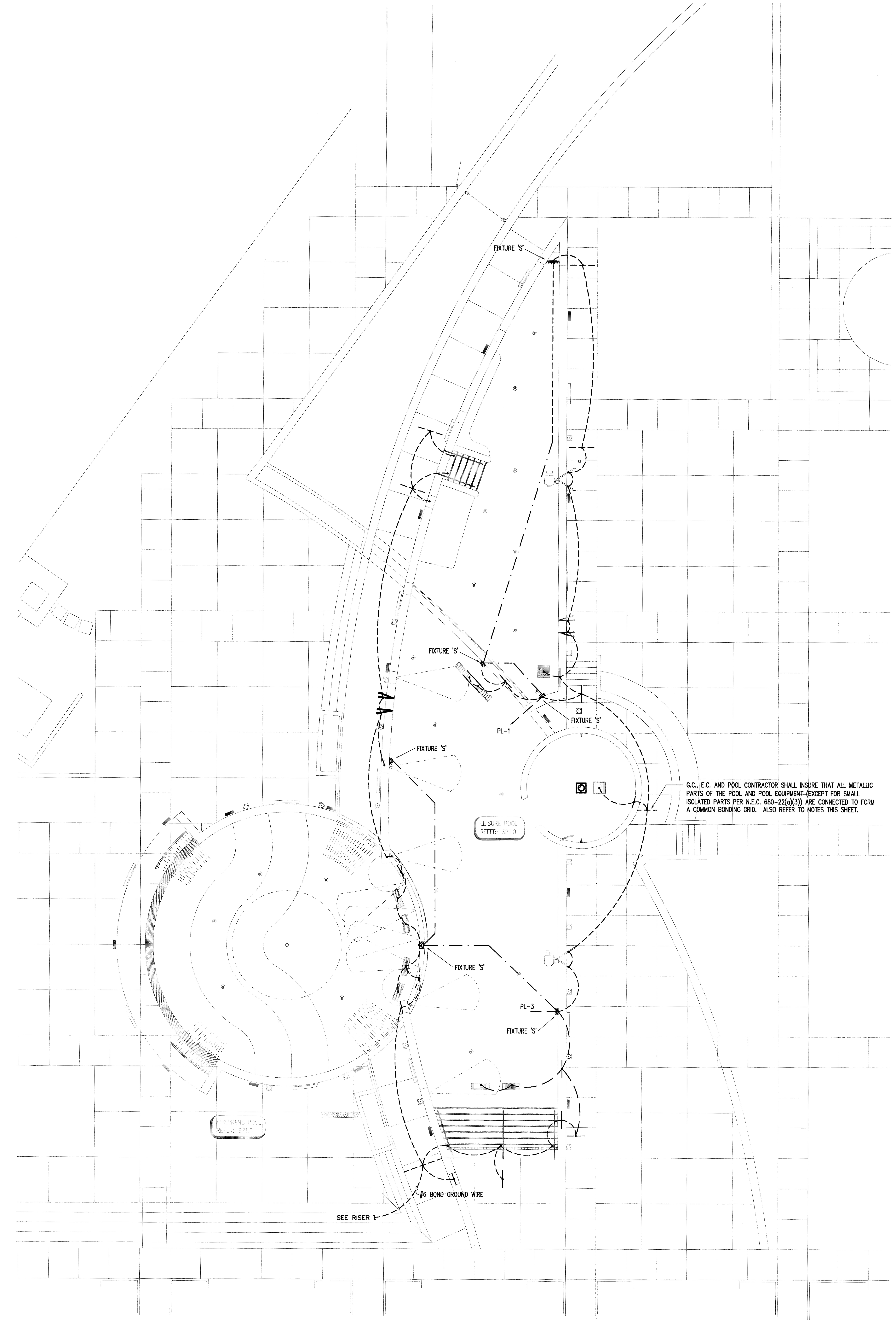

2 POOL GROUNDING GRID
SCALE: 1/8" = 1' - 0"

ISSUE DATE
FEB. 20, 2002
REVISIONS

ADDISON ATHLETIC CLUB EXPANSION
AND
LEISURE POOL
ADDISON, TEXAS

RON HOBBS ARCHITECTS
614 W. MAIN ST. SUITE #200 GARLAND, TEXAS 75040
(972) 494-0174 FAX (972) 494-0722

Halff Associates, Inc.
ENGINEERS • SCIENTISTS • SURVEYORS
8616 NORTHWEST PLAZA DRIVE
DALLAS TEXAS 75225
(214) 346-6200
AVO# 19488

STATE OF TEXAS
ALLAN N. JENSEN
20377
REGISTERED PROFESSIONAL ENGINEER

JOB NUMBER
0012

SHEET NAME
ELECTRICAL POOL PLAN
SHEET NUMBER
E104

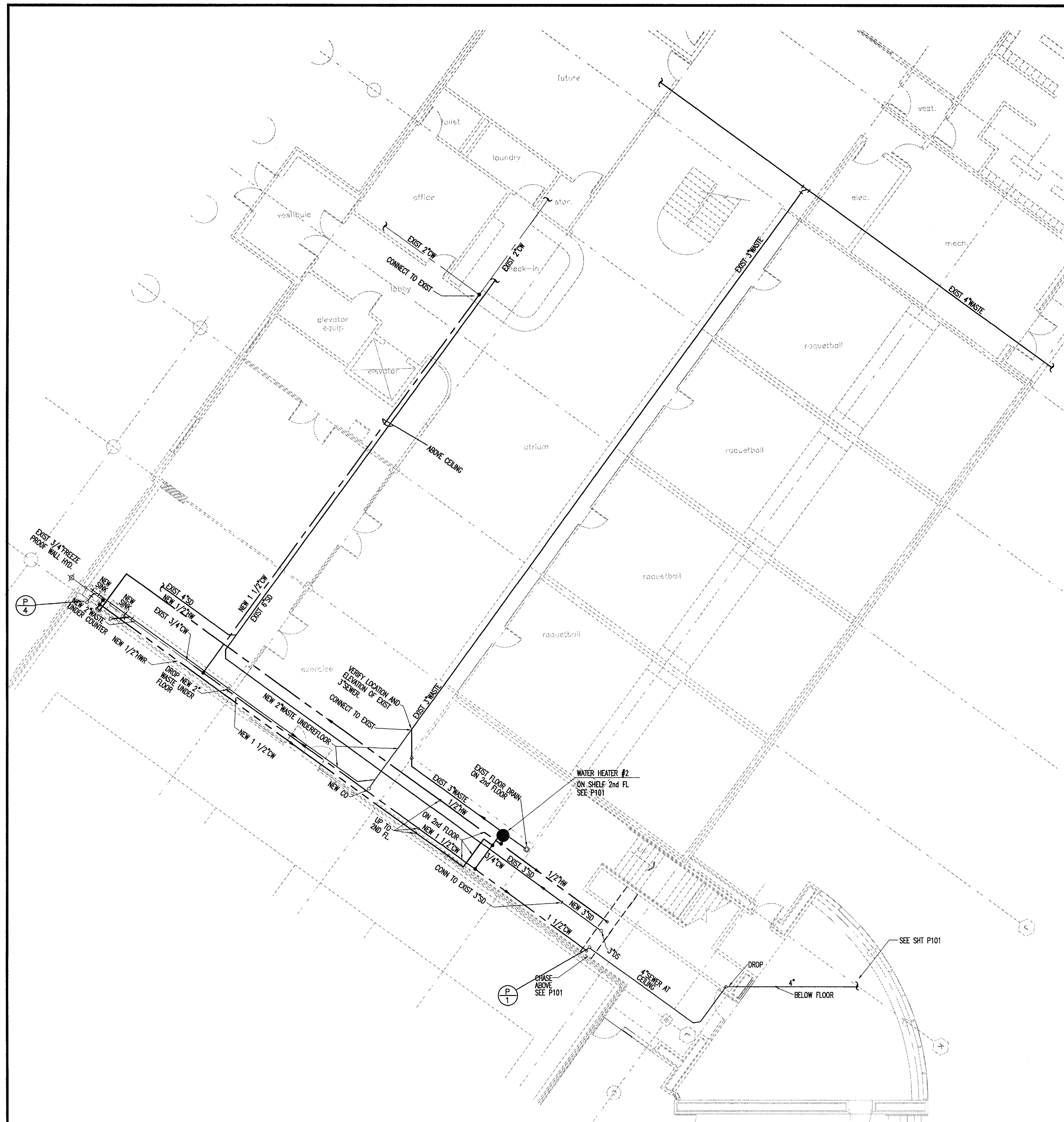

1 lower level floor plan exist building
1/8"=1'-0"

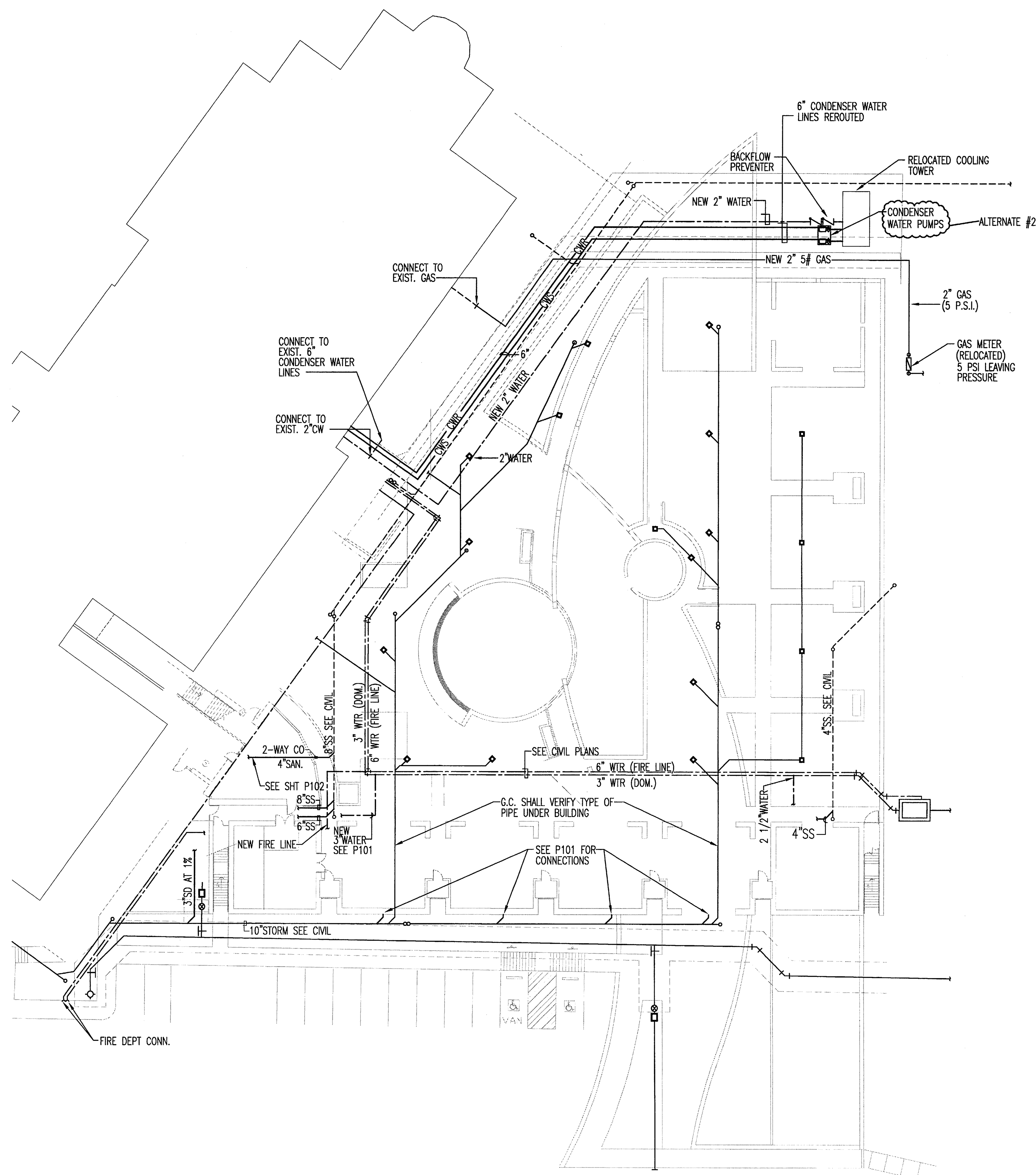

2 site plan – ground level
1"=20'-0"

PLUMBING SYMBOLS LEGEND

Symbol	Abbreviation	Description
	S OR W	SANITARY OR WASTE PIPING ABOVE SLAB
	S OR W	SANITARY OR WASTE PIPING BELOW SLAB
	SV	SANITARY VENT PIPING
G	G	GAS PIPING
	CW	COLD WATER PIPING
	HW	HOT WATER PIPING
	HWR	HOT WATER RETURN
	SD	STORM DRAIN
	DS	DOWNSPOUT
	RD	ROOF DRAIN
	BV	BALL VALVE
	GV	GATE VALVE
	CH. V	CHECK VALVE
	RV	RELIEF VALVE
	HB	HOSE BIBB
S		SHOCK ABSORBER
		STRAINER
	CO	WALL CLEANOUT
	FCO	FLOOR CLEANOUT
	FS	FLOOR SINK
	FD	FLOOR DRAIN
	FFD	FUNNEL DRAIN
M	WM	WATER METER
		CONNECT TO EXISTING

ISSUE DATE
FEB. 20, 2002

REVISIONS

ADDISON ATHLETIC CLUB EXPANSION AND LEISURE POOL
ADDISON, TEXAS

RON HOBBS ARCHITECTS
614 W. MAIN ST. SUITE #200 GARLAND, TEXAS 75040
(972) 494-0174 FAX (972) 494-0722

Halff Associates, Inc.
ENGINEERS SCIENTISTS SURVEYORS
8616 NORTHWEST PLAZA DRIVE
DALLAS TEXAS 75225
(214) 346-6200
AVO# 19468

STATE OF TEXAS
ALAN N. JENSEN
20377
REGISTERED PROFESSIONAL ENGINEER

JOB NUMBER
0012

SHEET NAME
PLUMBING SITE PLAN AND EXISTING BUILDING

SHEET NUMBER
P100

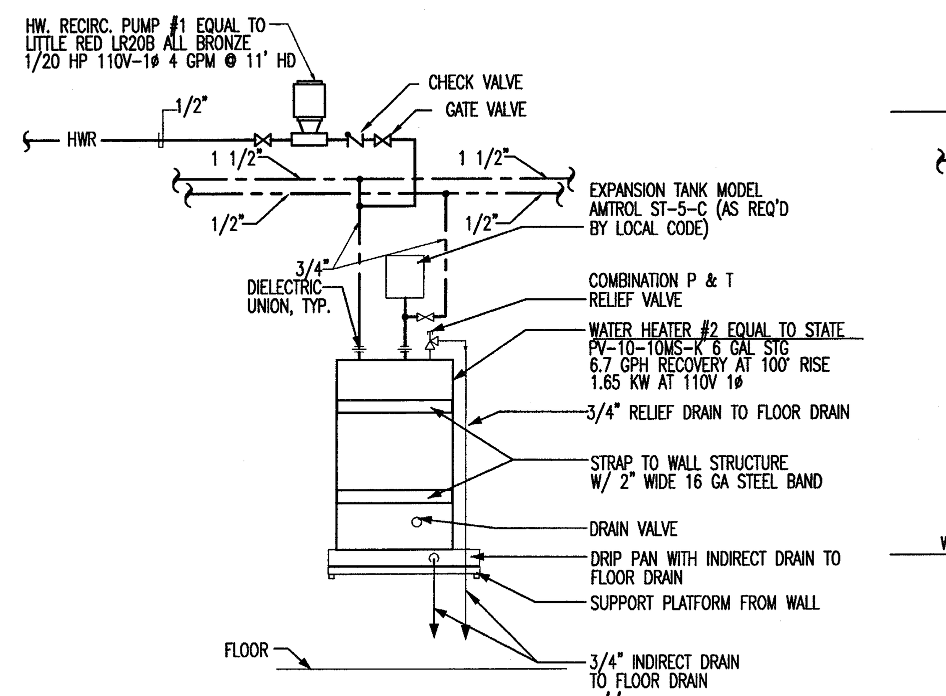

4 water heater #2 diagram
none

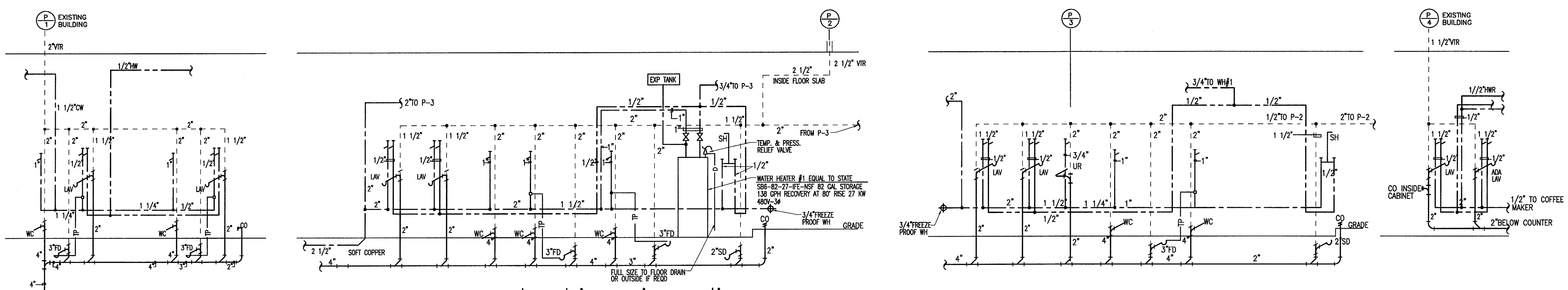

3 plumbing riser diagrams
none

PLUMBING SYMBOLS LEGEND

S OR W	SANITARY OR WASTE PIPING ABOVE SLAB
S OR W	SANITARY OR WASTE PIPING BELOW SLAB
SV	SANITARY VENT PIPING
G	GAS PIPING
CW	COLD WATER PIPING
HW	HOT WATER PIPING
HWR	HOT WATER RETURN
SD	STORM DRAIN
DS	DOWNSPOUT
RD	ROOF DRAIN
BV	BALL VALVE
GV	GATE VALVE
CH. V	CHECK VALVE
RV	RELIEF VALVE
HB	HOSE BIBB
	SHOCK ABSORBER
	STRAINER
CO	WALL CLEANOUT
FCO	FLOOR CLEANOUT
FS	FLOOR SINK
FD	FLOOR DRAIN
FFD	FUNNEL DRAIN
WM	WATER METER
	CONNECT TO EXISTING

PLUMBING FIXTURES

Water Closet A:
1. Fixture: American Standard "Afwall Aquameter" No. 2257.103, wall hung with carrier, 1.6 GPF, siphon jet, white vitreous china. Centoco No. 500cc white solid plastic seat, open front without cover, and stainless steel check spring.
   a. Fittings: Sloan Royal No. 111 exposed flush valve (1.6 GPF), with vacuum breaker, and stop, bolts, nuts, washers and caps.

Water Closet B (Handicap):
1. Fixture: Same as WC–A except mounted 17" high to top of seat.
   a. Fittings: Same as for WC–A. Install valve handle on wide side of stall.

Lavatory – Wall Hung:
1. Fixture: American Standard No. 0321.075 (4" centers), 19x17 Declyn, white vitreous china, wall hung, with concealed arms and carrier.
   a. Fittings: No. 5402.142H chrome–plated faucet (1.5 GPM) with metal lever handles, perforated drain, chrome–plated 3/8"x1/2" supplies with stops, risers, and escutcheons, adjustable, cast brass, chrome–plated 1–1/4" P–trap with cleanout. Insulate exposed hot water piping and drain piping under the lavatory. Use insulation kit equal to Handi Lav–Guard by Truebro.

Urinal:
1. Fixture: American Standard No. 6541.132 Allbrook wall hung with carrier, 1.0 gpf, white vitreous china, siphon jet type, with flushing rim, top spud and 2" threaded inside connection mounted 17" high to rim.
   a. Fittings: Sloan Royal No. 186–1 flush valve (1.0 gallon per flush), with stop, vacuum breaker, flush connection.

Shower:
1. Fixture: Shower cabinet not in Plumbing contract. Fittings and drain in Plumbing contract, as follows.
   a. Fittings: Symmons No. S–96–300–B24–X pressure balancing shower fitting and wall/hand type shower head – 2.5 GPM – with vertical wall track and flexible metal hose not less than 60" long, integral stops, and 2" floor drain, with nickle bronze strainer. Mixing valve shall be mounted, between 38" and 48" above floor, as per architectural drawings.

Emergency Eye Wash:
1. Fixture: Bradley Model S19–210X, hand/foot operated eye wash with stainless steel bowl, and all other appurtenances to make a complete installation. Or equal by Guardian.

Service Sink:
1. Fixture: Fiat Model MSB–2424 molded stone constructed mop service basin with white and black accents, factory installed stainless steel drain for lead caulk connection.
   a. Fittings: No. 830–AA chrome–plated service faucet with vacuum breaker, integral stops, adjustable wall brace, pail hook, 3/4" rubber hose 5' long, No. 832–AA 30" long stainless steel bracket, No. 889–CC stainless steel mop hanger, No. 833–AA silicone sealant, and 2" drain with dome strainer.

Sink in Multipurpose Room:
1. Fixture: Elkay No. LRAD–2521–60, self–rimming, 18 gauge type 302 stainless steel, with 21"x15–3/4"x6" bowl, TAS approved.
   a. Fittings: No. 2442 aerated swing–spout faucet with blade handles, No. LK–18 perforated drain with 1–1/2" tailpiece, chrome–plated 1–1/2" P–trap with cleanout, 3/8" angle stops.

Two required, see architectural for elevations.

Outdoor Drinking Fountain (shall meet TAS requirements):
1. Haws Model 3380, free standing, stainless steel fountain, with push button controls.

Two required, one at standard, one at TAS height, 36" to spout.
Drain both to gravel pit, of volume 2 to 3 cubic feet.

FIXTURES SHALL BE MOUNTED AT HEIGHTS SHOWN ON ARCHITECT'S DRAWINGS

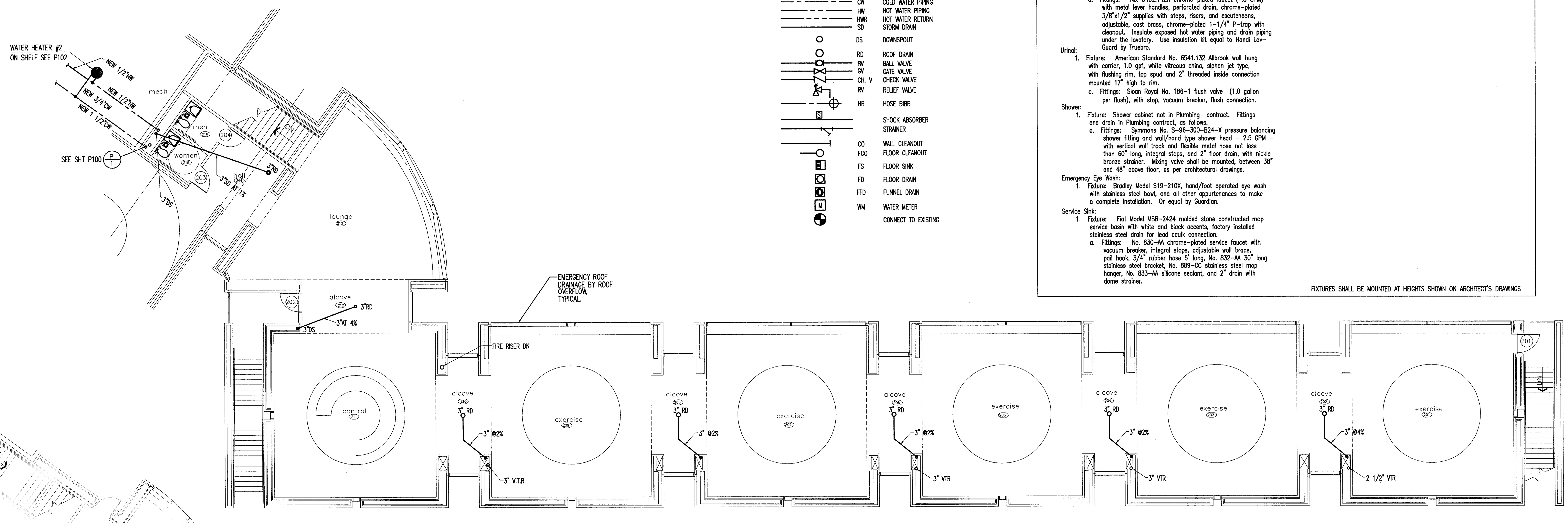

2 upper level floor plan
1/8"=1'-0"

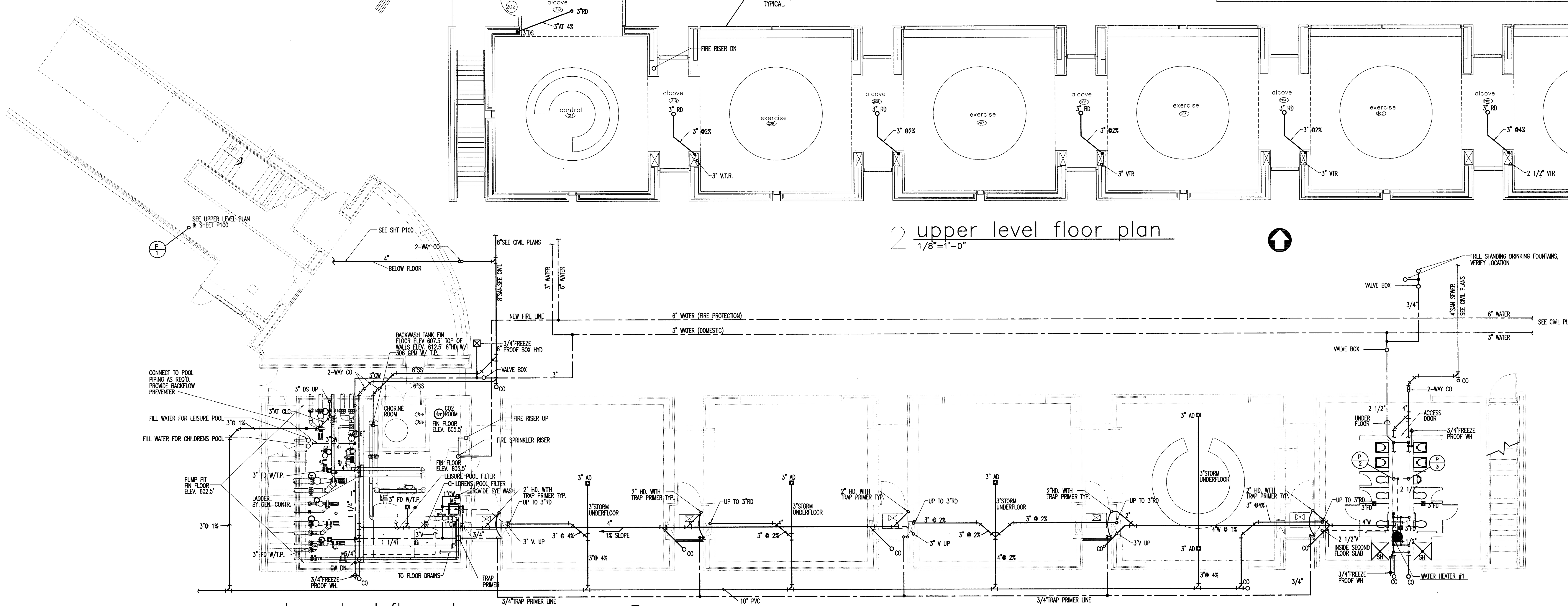

1 lower level floor plan
1/8"=1'-0"

ISSUE DATE
FEB. 20, 2002
REVISIONS

ADDISON ATHLETIC CLUB EXPANSION AND LEISURE POOL
ADDISON, TEXAS

RON HOBBS ARCHITECTS
614 W. MAIN ST. SUITE #200 GARLAND, TEXAS 75040
(972) 494-0174 FAX (972) 494-0722

Halff Associates, Inc.
ENGINEERS SCIENTISTS SURVEYORS
8616 NORTHWEST PLAZA DRIVE
DALLAS TEXAS 75225
(214) 346-6200
AVO# 19468

STATE OF TEXAS
ALLAN N. JENSEN
20377
REGISTERED PROFESSIONAL ENGINEER

JOB NUMBER
0012

SHEET NAME
PLUMBING PLAN

SHEET NUMBER
P101