legend
CJ = CONTROL JOINT

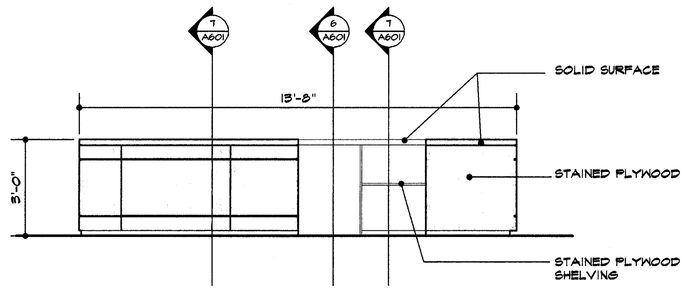

7 desk elevation – rm. #211
3/8"=1'-0"

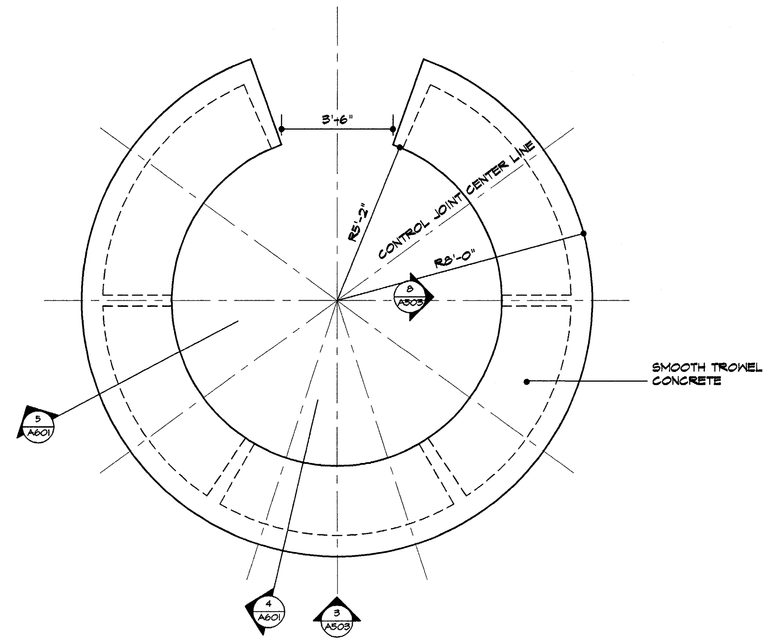

5 desk floor plan – rm. #105
3/8"=1'-0"

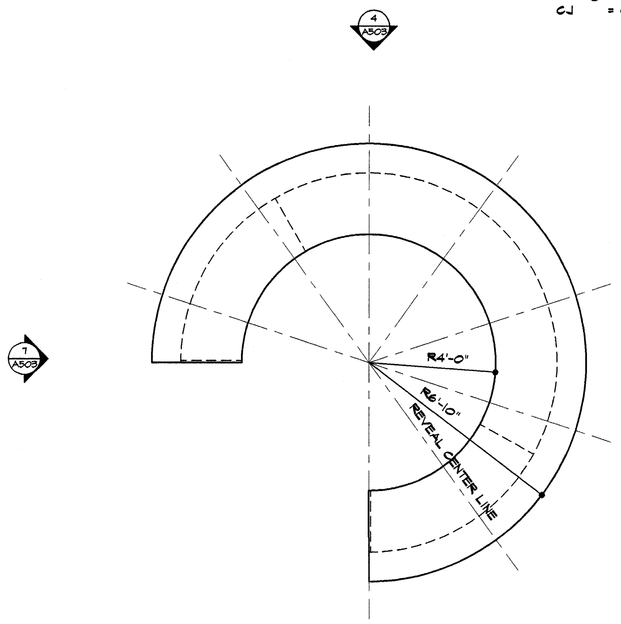

6 desk floor plan – rm. #211
3/8"=1'-0"

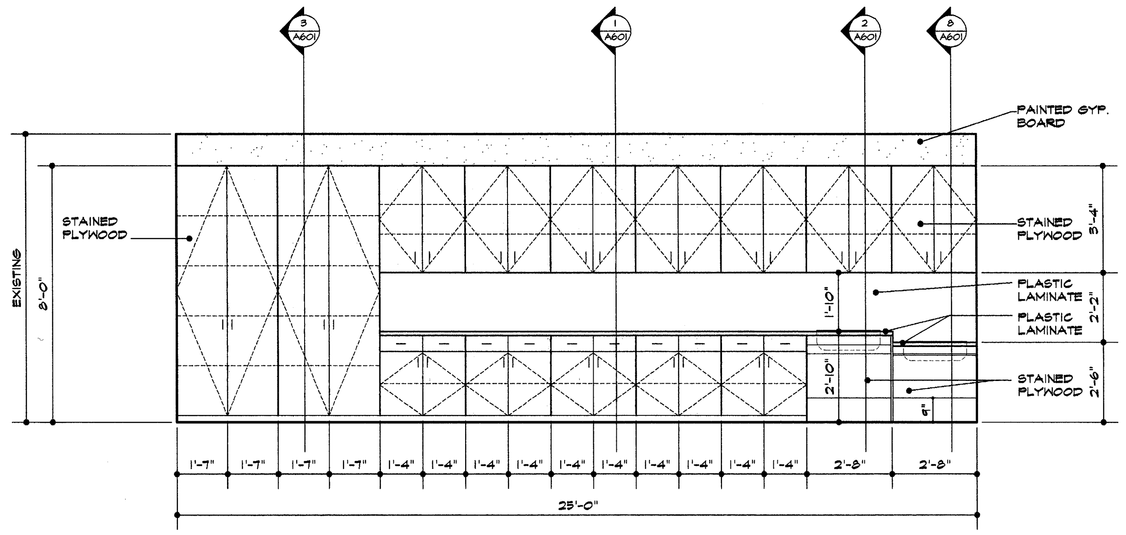

2 interior elevation – rm. #121
3/8"=1'-0"

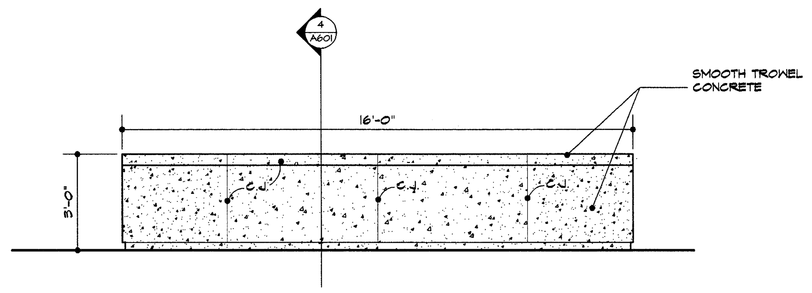

3 desk elevation – rm. #105
3/8"=1'-0"

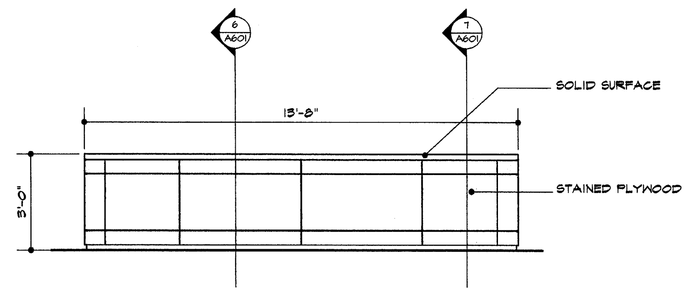

4 desk elevation – rm. #211
3/8"=1'-0"

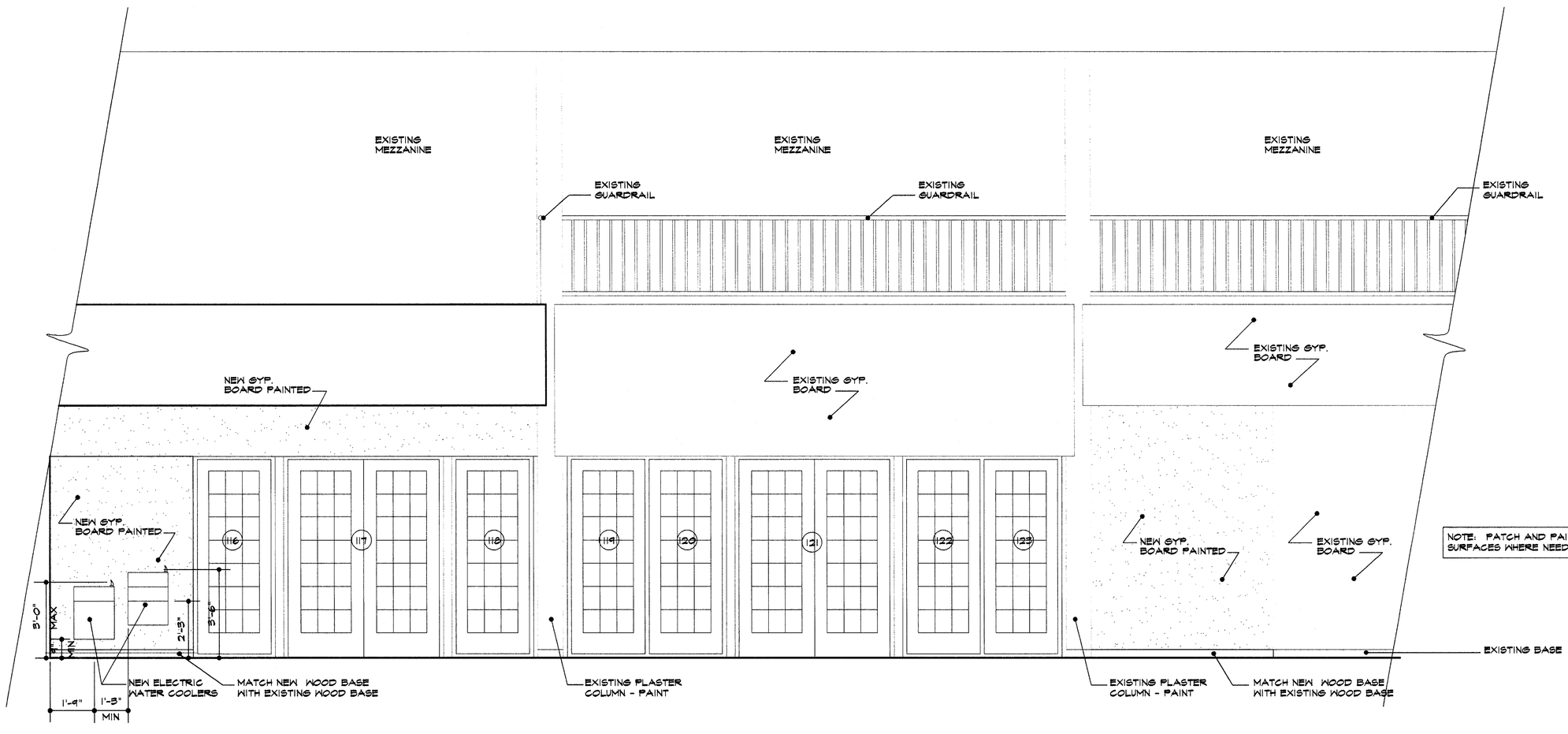

NOTE: PATCH AND PAINT EXISTING SURFACES WHERE NEEDED TO MATCH NEW.

1 interior elevation –existing exercise
3/8"=1'-0"

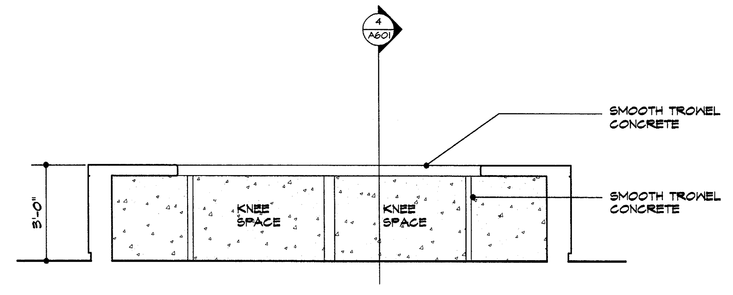

8 desk elevation – rm. #105
3/8"=1'-0"

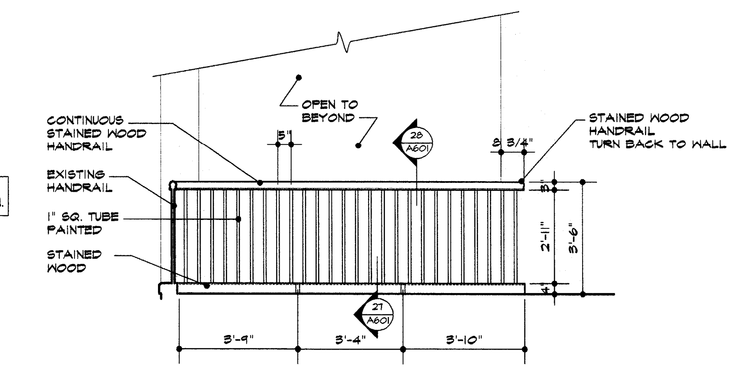

9 interior elevation
3/8"=1'-0"

ISSUE DATE
FEB. 20, 2002
REVISIONS

ADDISON ATHLETIC CLUB EXPANSION
AND
LEISURE POOL
ADDISON, TEXAS

RON HOBBS ARCHITECTS
614 W. MAIN ST. SUITE #200 GARLAND, TEXAS 75040
(972) 494-0174 FAX (972) 494-0722

JOB NUMBER
0012

SHEET NAME
INTERIOR ELEVATIONS
SHEET NUMBER
A503