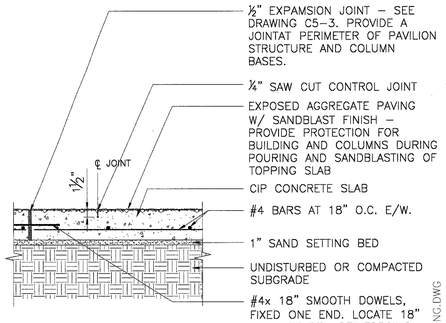

13 PAVING AT PAVILION
SCALE: 1" = 1'-0"

S-TOPPING.DWG

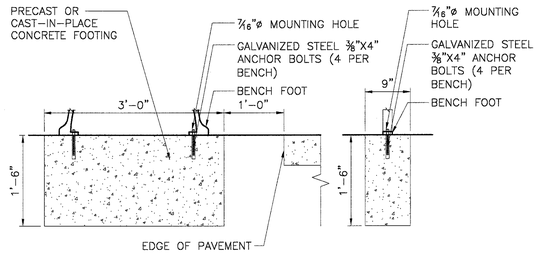

10 BENCH FOOTING
SCALE: 1" = 1'-0"

S-BNCH-FTG.DWG

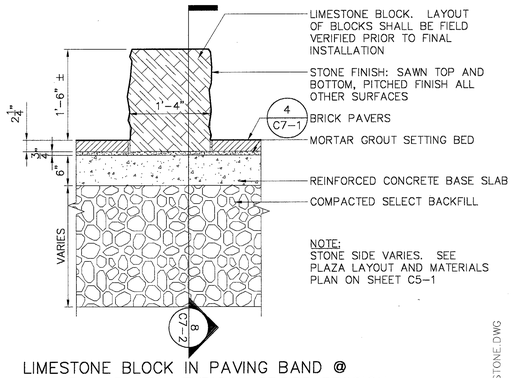

7 LIMESTONE BLOCK IN PAVING BAND @ FOUNTAIN PLAZA, TYPICAL CROSS SECTION
SCALE: 1" = 1'-0"

S-STONE.DWG

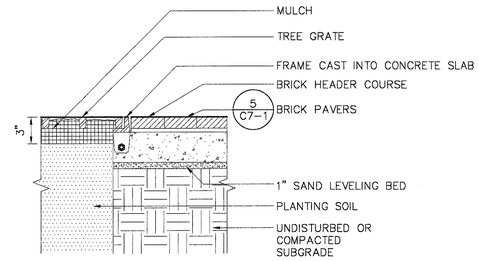

4 TREE GRATE AND FRAME SECTION
SCALE: NONE

S-TREE-GRATE.DWG

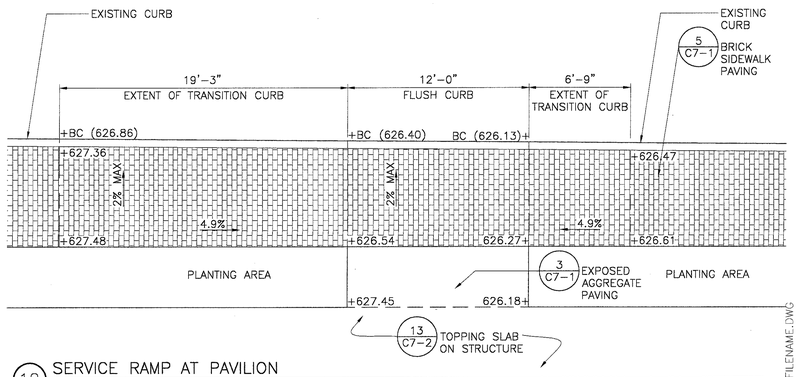

12 SERVICE RAMP AT PAVILION
SCALE: 1/4" = 1'-0"

FILENAME.DWG

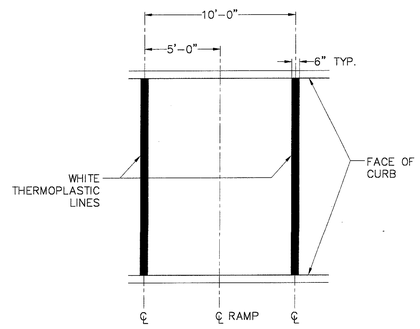

6 PAINTED CROSSWALK
SCALE: 1/4"=1'-0"

P-CRSWLK.DWG

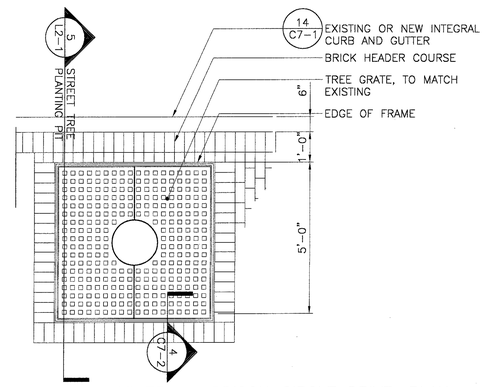

3 TREE GRATE IN ADDISON CIRCLE DRIVE: PLAN
SCALE: 1/2" = 1'-0"

P-TREE-GRATE.DWG

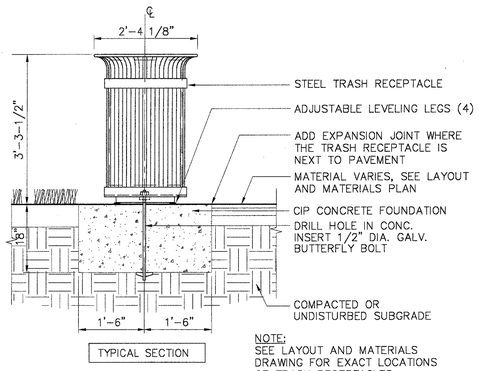

NOTE:
SEE LAYOUT AND MATERIALS DRAWING FOR EXACT LOCATIONS OF TRASH RECEPTACLES.

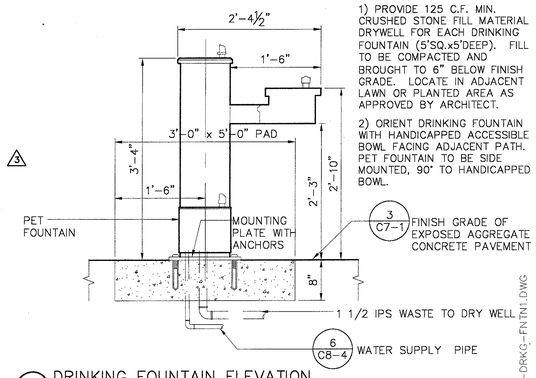

NOTE:
1) PROVIDE 125 C.F. MIN. CRUSHED STONE FILL MATERIAL DRYWELL FOR EACH DRINKING FOUNTAIN (5'SQ.x5'DEEP). FILL TO BE COMPACTED AND BROUGHT TO 6" BELOW FINISH GRADE. LOCATE IN ADJACENT LAWN OR PLANTED AREA AS APPROVED BY ARCHITECT.
2) ORIENT DRINKING FOUNTAIN WITH HANDICAPPED ACCESSIBLE BOWL FACING ADJACENT PATH. PET FOUNTAIN TO BE SIDE MOUNTED, 90° TO HANDICAPPED BOWL.

9 DRINKING FOUNTAIN ELEVATION
SCALE: 1"=1'-0"

S-DRKG-FNTN1.DWG

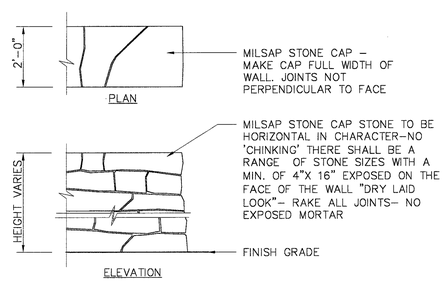

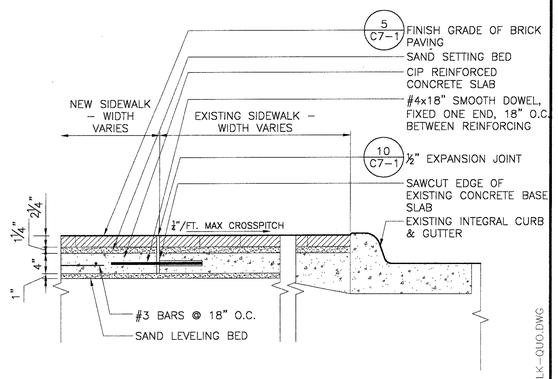

2 BRICK SIDEWALK EXTENSION AT QUORUM DRIVE
SCALE: 1" = 1'-0"

S-WALK-QUO.DWG

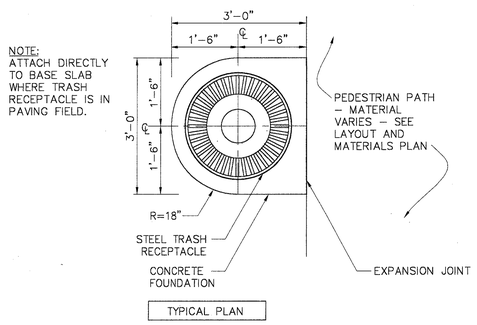

NOTE:
ATTACH DIRECTLY TO BASE SLAB WHERE TRASH RECEPTACLE IS IN PAVING FIELD.

11 TRASH RECEPTACLE MOUNTING BASE: SECTION/PLAN
SCALE: 3/4"=1'-0"

TRASH.DWG

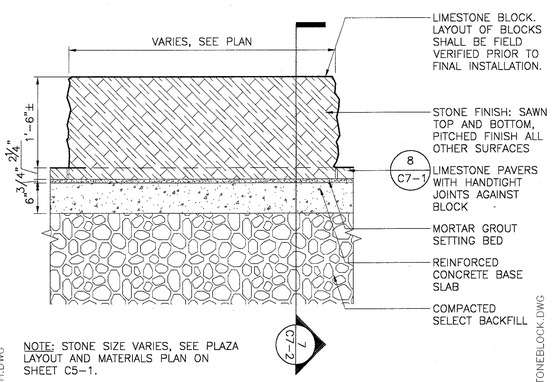

NOTE: STONE SIZE VARIES, SEE PLAZA LAYOUT AND MATERIALS PLAN ON SHEET C5-1.

8 LIMESTONE BLOCK IN PLAZA, TYPICAL LONG. SECTION
SCALE: NTS

S-STONEBLOCK.DWG

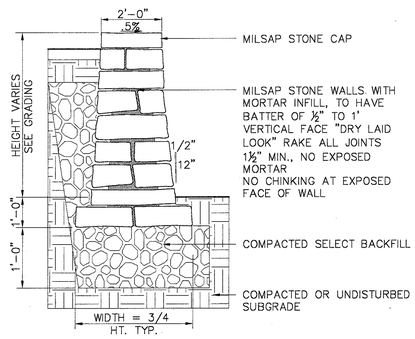

5 MILSAP STONE RETAINING WALL
SCALE: 1/2" = 1'-0"

FLDSTWALL.DWG

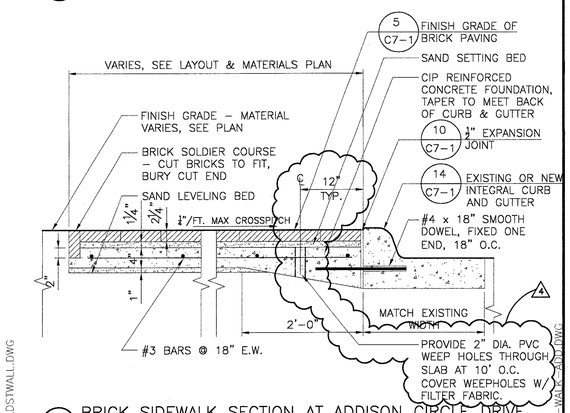

1 BRICK SIDEWALK SECTION AT ADDISON CIRCLE DRIVE
SCALE: 1" = 1'-0"

S-WALK-ADD.DWG

SASAKI
Interdisciplinary Design
64 Pleasant Street, Watertown, Massachusetts 02472 USA
t 617 926 3300 f 617 924 2748 w www.sasaki.com

No.	Description	Date
4	BULLETIN #4	04-14-03
3	BULLETIN #2	03-10-03
	ISSUED FOR CONSTRUCTION	11-26-02
1	ADDENDUM #2	10-21-02
	ISSUED FOR CONSTRUCTION	09-30-02

DWG ISSUE & REVISION HISTORY

Stamp

STATE OF TEXAS
STEPHEN E. HAMWEY
57411
LICENSED
PROFESSIONAL ENGINEER

Project Title:

ADDISON ARTS & EVENTS DISTRICT
ADDISON, TEXAS

Drawing Title:

SITE DETAILS

Project No. 14516.00 Scale: AS NOTED
Drawn By: CB
Checked By: DC
Approved By: SEH
Date: September 30, 2002

Drawing No.

C7-2