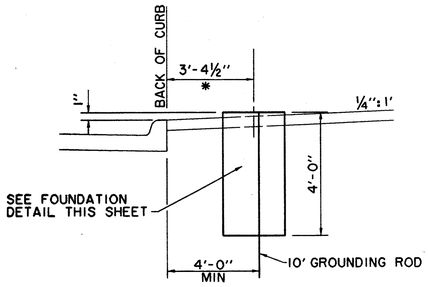

* UNLESS OTHERWISE NOTED IN PLANS
* SOUTH SIDE McENTIRE - LIGHT BASE 2'-6" OFF B.C. (JUST SOUTH SIDE)

LIGHT FIXTURE PLACEMENT DETAIL

N.T.S.

USE CAUTION WHEN SETTING ANCHOR BOLTS. BOLTS MUST BE VERTICALLY STRAIGHT AND CENTERED ON DIMENSIONS SHOWN.

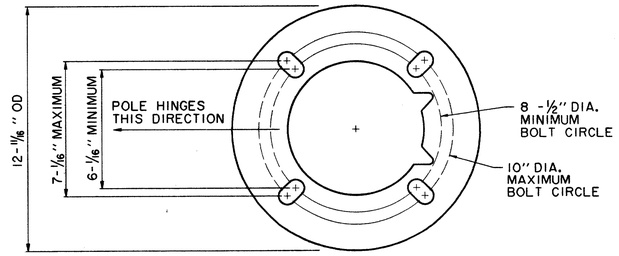

ROUND BOTTOM HINGE BASE ANCHOR BOLT TEMPLATE

N.T.S.

NOTE:

ADEQUATE DRAINAGE MUST BE PROVIDED IN CONCRETE FOUNDATION OR GROUT.

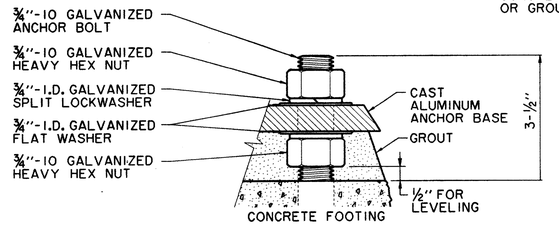

BOLT PROJECTION DETAIL

N.T.S.

STREET LIGHTING NOTES

1. THE STREET LIGHTING FOR THIS PROJECT WILL CONSIST OF INSTALLATION OF 2" PVC CONDUIT, LIGHT POLE BASES, PULL BOXES (HANDHOLES) LIGHT POLES, LUMINAIRES, WIRING AND CONNECTION TO TO POWER SOURCE AS A COMPLETE SYSTEM PER DETAILED SPECIFICATIONS.

2. ALL STREET LIGHTING CONDUIT IS TO BE INSTALLED WITH A MINIMUM OF 24 INCHES OF COVER TO THE TOP OF THE PIPE FROM FINISHED PAVEMENT TO AVOID CONFLICT WITH IRRIGATION LINES WHICH WILL BE AT 12" AND 18" DEPTH. CONDUIT SHOULD BE NO DEEPER THAN 36" TO AVOID CONFLICT WITH OTHER UTILITIES.

3. FOR THE PURPOSES OF COORDINATION, PEDESTRIAN LIGHTS TO BE INSTALLED PER THE STREETSCAPE PLANS FOR THIS PROJECT WILL BE THE FOLLOWING:

   SEE SHEET E21 FOR POLE TYPES.

   THIS POLE WILL BE INSTALLED WITH A 175 WATT METAL HALIDE BEGA 9801 ED-17MH/120V FIXTURE AND LUMINAIRE.

   POLES WILL BE PRIMED AND PAINTED AT THE FACTORY.

4. LOCATIONS OF ANY STREET LIGHTS MAY NOT BE ALTERED WITHOUT PERMISSION FROM THE ENGINEER.

5. THE LETTER "C" SHALL BE STAMPED OR CHISELED ON CURB AT ALL LOCATIONS OF CONDUIT UNDER DRIVES AND INTERSECTIONS.

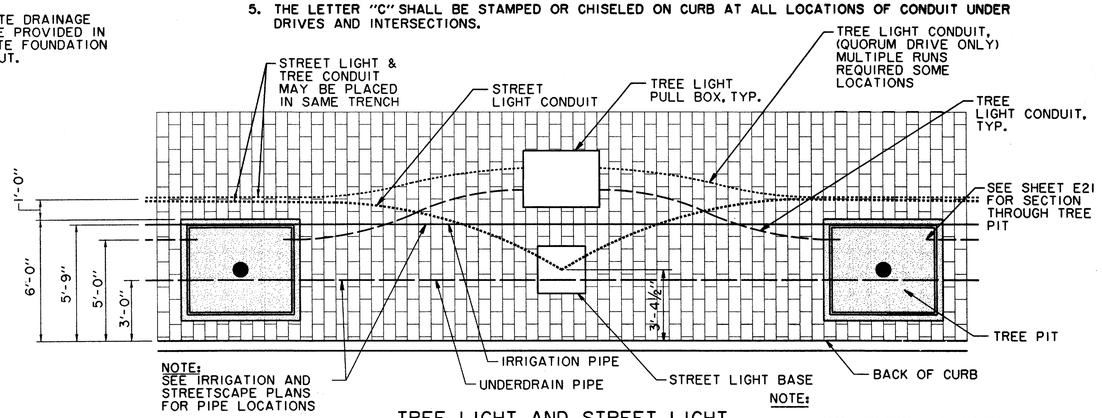

NOTE:
SEE IRRIGATION AND STREETSCAPE PLANS FOR PIPE LOCATIONS

TREE LIGHT AND STREET LIGHT CONDUIT DETAIL

CONDUIT SHALL BE DEFLECTED AROUND TREE PIT LOCATIONS - TYPICAL

N.T.S.

NOTE:

TREE LIGHT CONDUITS BETWEEN TREE PITS SHALL BE DEFLECTED AROUND STREET LIGHT BASE AS REQUIRED.

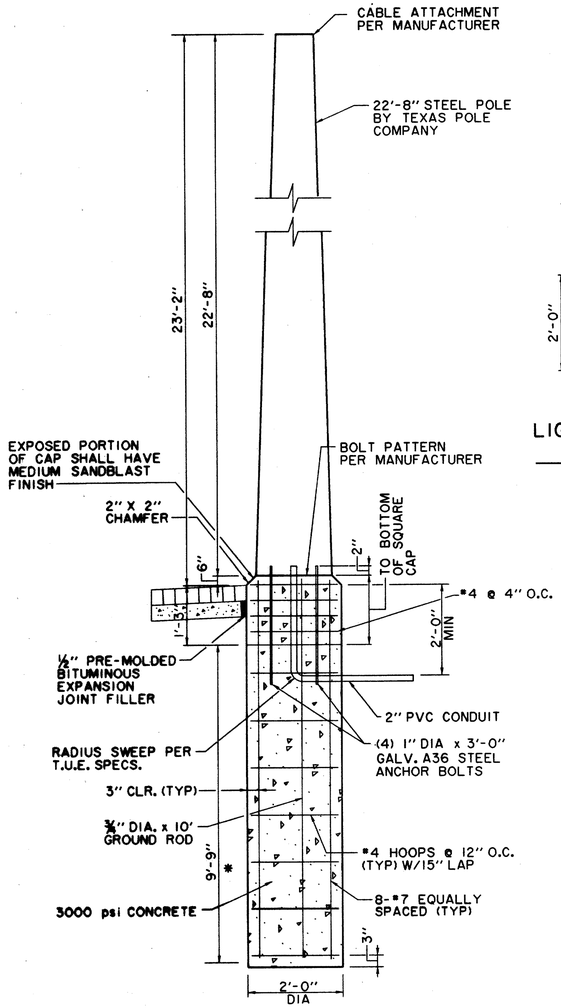

HANGING LIGHTS POLE SUPPORT FOUNDATION 1 2

N.T.S.

* IF GRAY LIME STONE IS ENCOUNTERED THEN MINIMUM DEPTH SHALL BE ONE DIAMETER (2 FEET) INTO GRAY LIME STONE. IN NO CASE SHALL THIS DIMENSION BE LESS THAN 3'-9".

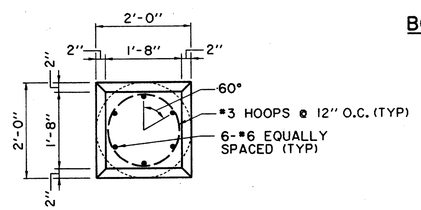

LIGHT FIXTURE FOUNDATION AND CAP PLAN

N.T.S.

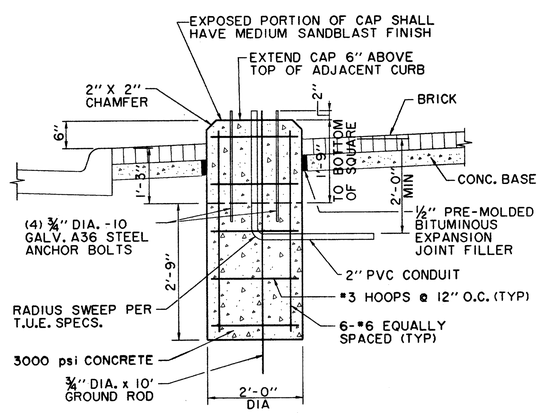

LIGHT FIXTURE FOUNDATION AND CAP SECTION

N.T.S.

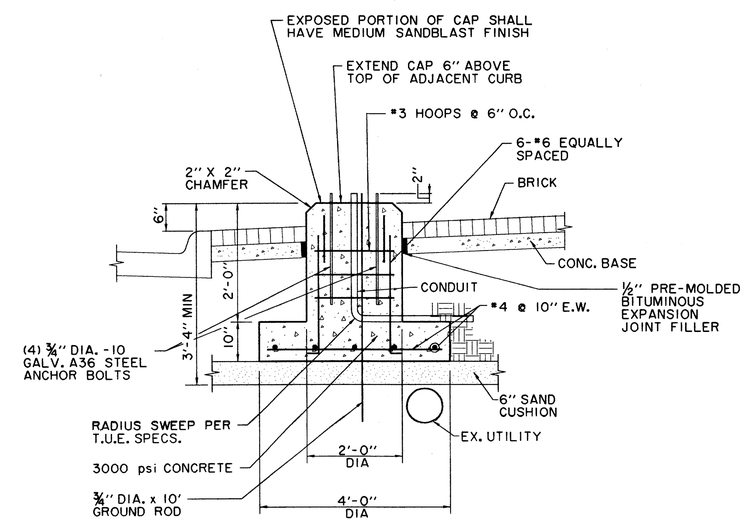

ALTERNATE LIGHT FIXTURE FOOTING AT UTILITY CONFLICT

N.T.S.

(NOT TO BE USED FOR HANGING LIGHT FOUNDATION)

THE SEAL APPEARING ON THIS DOCUMENT WAS AUTHORIZED BY DAVID E. MEYERS, P.E. 81512

STATE OF TEXAS — DAVID E. MEYERS — 81512 — REGISTERED PROFESSIONAL ENGINEER

12/18/98

RECORD DRAWING

DATE	DESCRIPTION	REF NO.
5/2/98	REVISED HANGING LIGHT POLE FOUNDATION	2
2/13/98	ADDED HANGING LIGHT POLE FOUNDATION	1
10/3/97	ISSUED FOR CONSTRUCTION	N/A
7/14/97	ISSUED FOR BID	N/A

LIGHTING DETAILS

ADDISON CIRCLE

PHASE II PUBLIC INFRASTRUCTURE

TOWN OF ADDISON, TEXAS

Huitt-Zollars, Inc./Engineering/Architecture
Dallas, Fort Worth, Houston, El Paso, Phoenix, Tustin, Ontario

DESIGN	DRAWN	APPR.	SCALE	DATE	PROJECT NO.	NO.
HZI	HZI	DEM	N.T.S.	OCT. 97	01-1822-21	ST13

hz \proj\01182221\dgn\AUC2TY04.DGN