CIVIL AND LANDSCAPE PLANS FOR CONSTRUCTION OF
PAVING, STREETSCAPE AND UTILITY IMPROVEMENTS

ADDISON CIRCLE
PUBLIC INFRASTRUCTURE
PHASE II-B

TOWN OF
ADDISON

SHEET NO.	INDEX OF DRAWINGS
	COVER SHEET
P1	LEGEND & ABBREVIATIONS
P2	HORIZONTAL CONTROL PLAN
P3	PAVING TYPICAL SECTIONS & RECOMMENDED UTILITY LOCATIONS
P4	DEMOLITION PLAN
P5	PAVING & STREETSCAPE SITE PLAN
P6	SIGNAGE & STRIPING PLAN
P7-P11	PAVING PLANS & PROFILES
GR1-GR2	SIDEWALK GRADING PLANS
P12	SLEEVING PLAN
P13-P14	PAVING DETAILS
ST1-ST2	STREETSCAPE PLANS
ST3-ST6	STREETSCAPE, LIGHT & SUBDRAIN DETAILS
SW1	DRAINAGE AREA MAP
SW2-SW3	STORM WATER CALCULATIONS
SW4	STORM WATER SITE PLAN
SW5-SW7	STORM WATER PLANS & PROFILES
SW8-SW9	STORM WATER DETAILS
W1	WATER & WASTEWATER SITE PLAN
W2-W5	WATER PLANS & PROFILES
W6-W7	WATER DETAILS
WW1	WASTEWATER PLAN & PROFILE
WW2-WW3	WASTEWATER DETAILS
PC1	POLLUTION CONTROL PLAN
PC2	POLLUTION CONTROL DETAILS
E1	ELECTRICAL DUCT BANK SITE PLAN
E2-E4	ELECTRICAL DUCT BANK PLANS & PROFILES
E5-E13	ELECTRICAL DUCT BANK DETAILS
E14-E15	STREET LIGHT POWER PLANS & DETAILS
PF1-PF2	PLANTING & FURNITURE PLANS
PF3	PLANTING DETAILS
IR1-IR2	IRRIGATION PLANS
IR3	IRRIGATION DETAILS

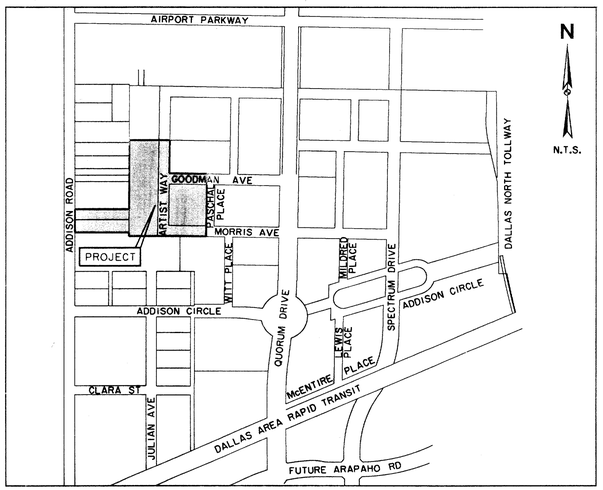

LOCATION MAP

RECORD DRAWINGS 11/17/00

THIS SET OF DRAWINGS HAS BEEN MODIFIED FROM THE ORIGINAL DESIGN DRAWINGS TO REFLECT THE FIELD CHANGES THAT OCCURRED DURING CONSTRUCTION WHICH WERE DOCUMENTED AND FINISHED TO THE ENGINEER BY THE CONTRACTOR. BASED ON THIS INFORMATION AND THE ENGINEER'S OBSERVATION OF CERTAIN CONSTRUCTION ACTIVITIES, TO THE BEST OF THE ENGINEER'S KNOWLEDGE AND BELIEF, THE PROJECT IS CONSTRUCTED IN CONFORMANCE WITH THE PLANS AND SPECIFICATIONS AND WILL FUNCTION AS DESIGNED.

OWNER:

TOWN OF ADDISON
DEPARTMENT OF PUBLIC WORKS
16801 WESTGROVE
P.O. BOX 9010
ADDISON, TEXAS 75001
(972) 450-2871 FAX (972) 450-2837

ENGINEER & LANDSCAPE ARCHITECT:

HUITT-ZOLLARS, INC.
3131 McKINNEY AVE., SUITE 600
DALLAS, TEXAS 75204
(214) 871-3311 FAX (214) 871-0757
DAVID E. MEYERS, P.E.
TX. REG. NO. 81512
KAREN W. KOERTH, L.A.
TX. REG. NO. 1594

RECORD DRAWING

THE SEAL APPEARING ON THIS DOCUMENT WAS AUTHORIZED BY DAVID E. MEYERS, P.E. 81512 ON

STATE OF TEXAS
DAVID E. MEYERS
81512
REGISTERED
PROFESSIONAL ENGINEER
12/19/00

ISSUED FOR CONSTRUCTION 6/23/99

FF-20

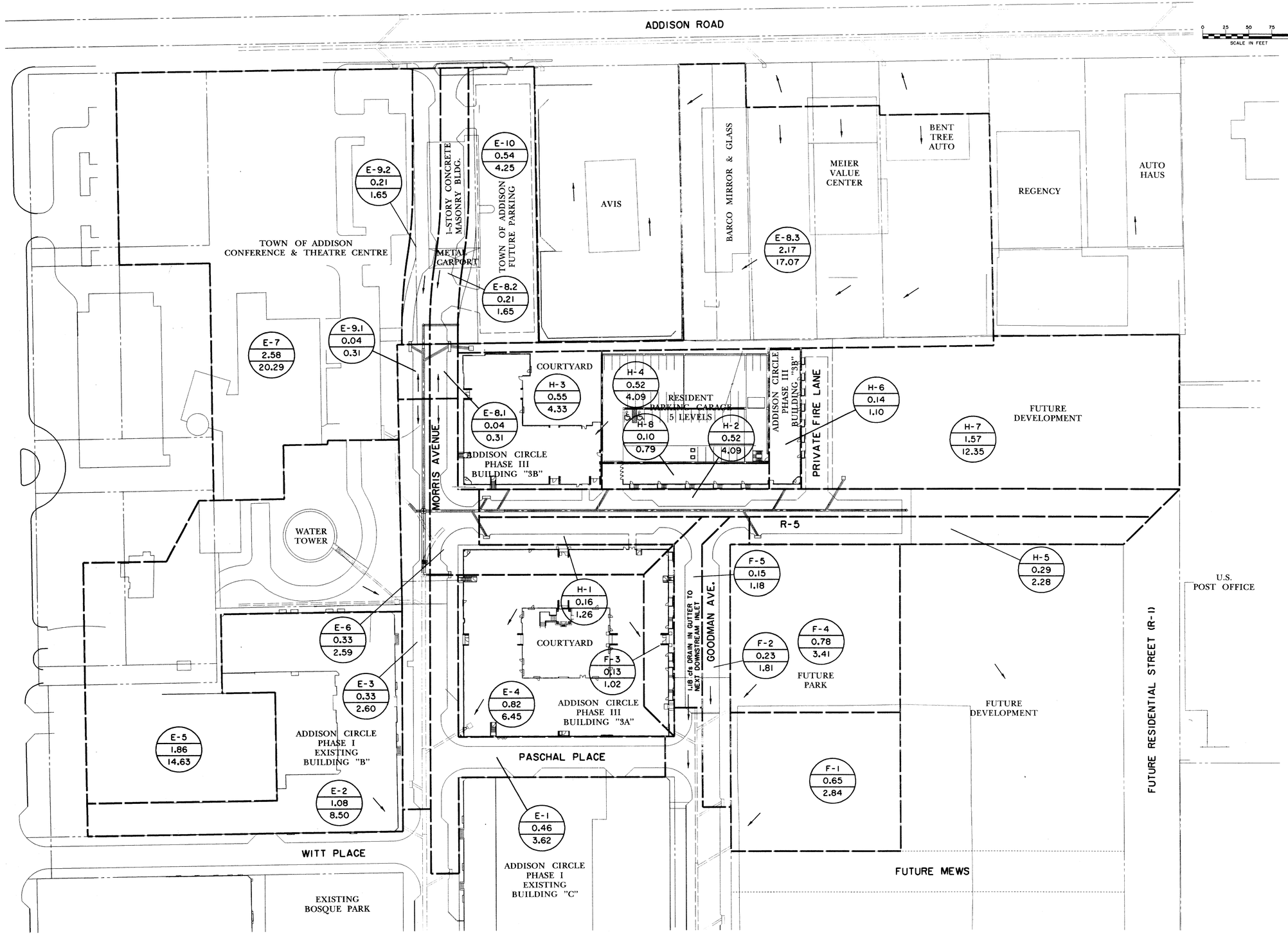

NOTES:

1. FOR ADDITIONAL INFORMATION REGARDING OUTFALL CAPACITY, OFFSITE FLOWS AND OTHER DETAILS THAT MAY BE RELEVANT TO THIS DRAINAGE SYSTEM, SEE "MASTER INFRASTRUCTURE REPORT FOR ADDISON CIRCLE" DATED DECEMBER 18, 1995, PREPARED BY HUITT-ZOLLARS, INC.
2. THIS PLAN ILLUSTRATES THE PROBABLE DRAINAGE DIVIDES FOR THE ULTIMATE BUILDOUT CONDITION WITHIN AND UPSTREAM OF ADDISON CIRCLE PHASE III. THE PERMANENT DRAINAGE SYSTEM HAS BEEN DESIGNED BASED ON FULLY DEVELOPED CONDITIONS.
3. FOR RUNOFF AND INLET CALCULATIONS, SEE SHEETS SW2 THRU SW3.
4. EXISTING STORM SEWER LOCATIONS AND SIZES WERE OBTAINED FROM RECORD DRAWINGS FROM THE TOWN OF ADDISON. ACTUAL LOCATION IN THE FIELD MAY VARY FROM THE PLANS.

——— DRAINAGE AREA DIVIDE

←——— DIRECTION OF SURFACE FLOW

RUNOFF CRITERIA

C=0.50 FOR AREAS F1 & F4
C=0.90 FOR REMAINING AREAS
MINIMUM t_c=10.00 MINUTES
I_{100}=8.74 in/hr

A-1 — DRAINAGE AREA DESIGNATION
0.32 — TOTAL DRAINAGE AREA (ACRES) AT POINT OF CONCENTRATION
2.52 — Q100 (cfs)

RECORD DRAWING

THE SEAL APPEARING ON THIS DOCUMENT WAS AUTHORIZED BY DAVID E. MEYERS, P.E. 81512

STATE OF TEXAS — DAVID E. MEYERS 81512 — REGISTERED PROFESSIONAL ENGINEER — 12/18/00

DATE	DESCRIPTION	REF NO.
6/23/99	ISSUED FOR CONSTRUCTION	N/A
5/17/99	ISSUED FOR BID	N/A

DRAINAGE AREA MAP PROPOSED & FUTURE DEVELOPMENT

ADDISON CIRCLE

PHASE II-B PUBLIC INFRASTRUCTURE

TOWN OF ADDISON, TEXAS

Huitt - Zollars, Inc.
3131 Mckinney Ave., Suite 600, Dallas, TX 75204
Phone (214) 871-3311/Fax (214) 871-0757

DESIGN	DRAWN	APPR.	SCALE	DATE	PROJECT NO.	NO.
HZI	HZI	DEM	1"=50'	MAR. 99	01-1822-50	SWI

h:\proj\01182250\dgn\AUC3DAMI.DGN

T:\AUC3TOPO.DGN, U:\J\R\17-21-29,31-35,36,40
U:\AUC3UTIL.DGN, 41,43
T:\AUC3PAVE.DGN, 41
P:\AUC3BASE.DGN, 1-3,U:\J\R\41,43,44,62
B:\AUC3BG.DGN, 5,13,20,30,34,39-41
FMF ROTATION=0.920000
F:\TM\MILLER.TBL
h:\proj\01182250\dgn\AUC3DAMI.DGN
(\\CZDALL4.SRS\DWG\PLOTTING\400#\AUC3D
Huitt-Zollars, Inc.

INLET CALCULATIONS

INLET NO.	LOCATION	DESIGN STORM FREQ (YRS)	TIME OF CONC (MIN)	INTENSITY "I-100" (INCHES/ HOUR)	RUNOFF COEFF "C"	AREA "A" (ACRES)	"Q-100" FOR AREA (CFS)	CARRY-OVER FROM UPSTREAM (CFS)	TOTAL GUTTER FLOW (CFS)	GUTTER CAPACITY ONE DRY LANE (CFS)	GUTTER SLOPE (FT/FT)	STREET CROSS SLOPE (FT/FT)	ACTUAL GUTTER FLOW DEPTH (FT)	CAPACITY PER FOOT OF INLET (FT)	REQUIRED LENGTH OF INLET (FT)	SELECTED LENGTH OF INLET (FT)	TYPE	CARRY-OVER TO DOWNSTREAM (CFS)	COMMENTS
LINE "E" - MORRIS AVE																			
E-1	MORRIS AVE	100	10.00	8.74	0.90	0.46	3.62	0.00	3.62	NA	NA	PAR	NA	NA	6	6	REC	0.00	PHASE I DESIGN
E-2	EXIST BLDG 'B'	100	10.00	8.74	0.90	1.08	8.50	0.00	8.50	NA	NA	NA	NA	NA	NA	EX 21" STUB	REC	0.00	PHASE I DESIGN
E-3	MORRIS AVE	100	10.00	8.74	0.90	0.33	2.60	0.00	2.60	4.23	0.0100	PAR	NA	NA	5	6	MOD REC	0.00	
-4	PROP BLDG 'D'	100	10.00	8.74	0.90	0.82	6.45	0.00	6.45	NA	NA	NA	NA	NA	NA	EX 21" STUB	NA	0.00	PHASE I DESIGN
E-5	WATER TOWER SITE	100	10.00	8.74	0.90	1.86	14.63	0.00	14.63	NA	NA	NA	NA	NA	NA	EX 30" LAT	MOD REC	0.00	PHASE I DESIGN
E-6	MORRIS AVE	100	10.00	8.74	0.90	0.33	2.60	0.00	2.60	4.23	0.0100	PAR	NA	NA	4	6	MOD REC	0.00	
E-7	CONF CENTRE	100	10.00	8.74	0.90	2.58	20.29	0.00	20.29	NA	NA	NA	NA	NA	NA	EX 24" LAT	NA	0.00	PHASE I DESIGN
E-8.1,8.2	MORRIS AVE	100	10.00	8.74	0.90	0.25	1.97	0.00	1.97	4.14	0.0096	PAR	NA	NA	4	10	MOD REC	0.00	SAG MINIMUM 10 FOOT INLET
E-8.3	OFFSITE	100	10.00	8.74	0.90	2.17	17.07	0.00	17.07	NA	NA	NA	NA	NA	NA	5'X5'	"Y"	0.00	
E-9.1,9.2	MORRIS AVE	100	10.00	8.74	0.90	0.25	1.97	0.00	1.97	4.14	0.0096	PAR	NA	NA	4	10	MOD REC	0.00	SAG MINIMUM 10 FOOT INLET
E-10	FUTURE PARKING	100	10.00	8.74	0.90	0.54	4.25	0.00	4.25	NA	NA	NA	NA	NA	NA	PROP 18" LAT	NA	0.00	
LINE "F" - GOODMAN AVE																			
F-1	FUTURE PARK	100	10.00	8.74	0.50	0.65	2.84	0.00	2.84	NA	NA	NA	NA	NA	NA	EX 24" STUB	NA	0.00	PHASE I DESIGN
F-2	MORRIS AVE	100	10.00	8.74	0.90	0.23	1.81	0.00	1.81	5.67	0.0180	PAR	NA	NA	4	EX 8"	MOD REC	0.00	PHASE I DESIGN
F-3	PROP BLDG 'D'	100	10.00	8.74	0.90	0.13	1.02	0.00	1.02	NA	NA	NA	NA	NA	NA	EX 21" STUB	NA	0.00	PHASE I DESIGN
F-4	FUTURE PARK	100	10.00	8.74	0.50	0.78	3.41	0.00	3.41	NA	NA	NA	NA	NA	NA	EX 21" STUB	NA	0.00	PHASE I DESIGN
F-5	MORRIS AVE	100	10.00	8.74	0.90	0.15	1.18	0.00	1.18	5.67	0.0180	PAR	NA	NA	3	6	MOD REC	0.00	PHASE I DRAINAGE AREA F-7
LINE "H" - ARTIST WAY																			
H-1	ARTIST WAY	100	10.00	8.74	0.90	0.16	1.26	0.00	1.26	6.84	0.0262	PAR	NA	NA	3	6	MOD REC	0.00	
H-2	ARTIST WAY	100	10.00	8.74	0.90	0.52	4.09	0.00	4.09	6.84	0.0262	PAR	NA	NA	8	8	MOD REC	0.00	
H-3	BLDG 'E'	100	10.00	8.74	0.90	0.55	4.33	0.00	4.33	NA	NA	NA	NA	NA	NA	PROP 18" LAT	NA	0.00	
H-4	BLDG 'E' GARAGE	100	10.00	8.74	0.90	0.52	4.09	0.00	4.09	NA	NA	NA	NA	NA	NA	PROP 18" LAT	NA	0.00	
H-5	ARTIST WAY	100	10.00	8.74	0.90	0.29	2.28	0.00	2.28	4.55	0.0116	PAR	NA	NA	5	6	MOD REC	0.00	
H-6	BLDG 'E'	100	10.00	8.74	0.90	0.14	1.10	0.00	1.10	NA	NA	NA	NA	NA	NA	PROP 18" LAT	NA	0.00	
H-7	FUTURE DEVELOPMENT	100	10.00	8.74	0.90	1.57	12.35	0.00	12.35	NA	NA	NA	NA	NA	NA	PROP 21" LAT	NA	0.00	
H-8	BLDG 'E'	100	10.00	8.74	0.90	0.10	0.79	0.00	0.79	NA	NA	NA	NA	NA	NA	PROP 18" LAT	NA	0.00	

STORM WATER RUNOFF CALCULATIONS

AREA NO.	Tc (MIN.)	INTENSITY "I-100" (IN./HR)	RUNOFF COEFF. "C"	AREA "A" (ACRES)	STORM RUNOFF "Q-100"
E-1	10.00	8.74	0.90	0.46	3.62
E-2	10.00	8.74	0.90	1.08	8.50
E-3	10.00	8.74	0.90	0.33	2.60
E-4	10.00	8.74	0.90	0.82	6.45
E-5	10.00	8.74	0.90	1.86	14.63
E-6	10.00	8.74	0.90	0.33	2.60
E-7	10.00	8.74	0.90	2.58	20.29
E-8.1	10.00	8.74	0.90	0.04	0.31
E-8.2	10.00	8.74	0.90	0.21	1.65
E-8.3	10.00	8.74	0.90	2.17	17.07
E-9.1	10.00	8.74	0.90	0.04	0.31
E-9.2	10.00	8.74	0.90	0.21	1.65
E-10	10.00	8.74	0.90	0.54	4.25
F-1	10.00	8.74	0.50	0.65	2.84
F-2	10.00	8.74	0.90	0.23	1.81
F-3	10.00	8.74	0.90	0.13	1.02
F-4	10.00	8.74	0.50	0.78	3.41
F-5	10.00	8.74	0.90	0.15	1.18
H-1	10.00	8.74	0.90	0.16	1.26
H-2	10.00	8.74	0.90	0.52	4.09
H-3	10.00	8.74	0.90	0.55	4.33
H-4	10.00	8.74	0.90	0.52	4.09
H-5	10.00	8.74	0.90	0.29	2.28
H-6	10.00	8.74	0.90	0.14	1.10
H-7	10.00	8.74	0.90	1.57	12.35
H-8	10.00	8.74	0.90	0.10	0.79

RECORD DRAWING

THE SEAL APPEARING ON THIS DOCUMENT WAS AUTHORIZED BY DAVID E. MEYERS, P.E. 81512

STATE OF TEXAS · DAVID E. MEYERS · 81512 · REGISTERED PROFESSIONAL ENGINEER · 12/18/00

DATE	DESCRIPTION	REF NO.
6/23/99	ISSUED FOR CONSTRUCTION	N/A
5/17/99	ISSUED FOR BID	N/A

STORM WATER CALCULATIONS
INLET & RUNOFF CALCULATIONS

ADDISON CIRCLE

PHASE II-B PUBLIC INFRASTRUCTURE

TOWN OF ADDISON, TEXAS

Huitt - Zollars, Inc.
3131 Mckinney Ave., Suite 600, Dallas, TX 75204
Phone (214) 871-3311/Fax (214) 871-0757

DESIGN	DRAWN	APPR.	SCALE	DATE	PROJECT NO.	NO.
HZI	HZI	DEM	N.T.S.	MAR. 99	01-1822-50	SW2

h:\proj\01182250\dgn\AUC3DG04.DGN

h:\proj\01182250\dgn\AUC3D04.DGN
Fri Dec 8 14:44:27 2000
\\Vol1\Data\MSOFFICE\EXCEL\MOVED\AUC3D04.PRF
Huitt-Zollars, Inc.

PRF FILE(NONE)=0000000
F:\SYM\MILLER.TBL

R:\AUC3D\DGN\ 3-5,8,13,20,23-25,32-34,37-39,45-52,55-61
no ref logical, *no ref name*, *no ref levels*

HYDRAULIC CALCULATIONS

COLLECTION POINT INLETS OR MANHOLES		DISTANCE BETWEEN COLLECTION POINTS	INCREMENTAL DRAINAGE AREA					TIME @ UPSTREAM STATION (MIN.)	INTENSITY "I-100" (IN./HR.)	100 YR. STORM RUNOFF "Q"	SLOPE OF HYDRAULIC GRADIENT (FT./FT.)	STORM SEWER SIZE	VELOCITY "V" (F.P.S.)	FLOW TIME IN SEWER (MIN.)	TIME @ DOWNSTREAM STATION (MIN.)	VELOCITY HEAD (FEET)	HYDRAULIC GRADE AT UPSTREAM STATION	HYDRAULIC GRADE AT DOWNSTREAM STATION	HYDRAULIC GRADE AT INLETS	COMMENTS
UPSTREAM STATION	UPSTREAM STATION		INCREM. AREA NO.	AREA "A" (AC.)	RUNOFF COEFF. "C"	INCREM. "CA"	ACCUM. "CA"													
LINE 'E'																				
875.00	844.96	30.04	E-10	0.54	0.90	0.49	0.49	10.00	8.74	4.2	0.0007	21	1.77	0.28	10.28	0.05	631.05	631.03		
844.96	836.87	8.09	"E-9.1,9.2"	0.25	0.90	0.23	0.71	10.28	8.67	6.2	0.0004	27	1.55	0.09	10.37	0.04	631.04	631.03		
836.87	671.50	165.37	"E-8.1,8.2,8.3"	2.42	0.90	2.18	2.89	10.37	8.65	25.0	0.0065	27	6.28	0.44	10.81	0.61	630.46	629.38		
671.50	601.50	70.00	LN. H & E-7	6.43	0.90	5.79	8.68	11.19	8.44	73.3	0.0079	39	8.83	0.13	11.32	1.21	628.32	627.77		
601.50	567.12	34.38	E-6	0.33	0.90	0.30	8.97	11.32	8.41	75.5	0.0084	39	9.10	0.06	11.39	1.29	626.79	625.02		
567.12	406.54	160.58	E-5	1.86	0.90	1.67	10.65	11.39	8.40	89.4	0.0117	39	10.78	0.25	11.63	1.80	624.50	622.62		
406.54	365.35	41.19	E-4	0.82	0.90	0.74	11.39	11.63	8.34	94.9	0.0089	42	9.87	0.07	11.70	1.51	622.77	622.40		
365.35	311.78	53.57	E-3	0.33	0.90	0.30	11.68	11.70	8.32	97.2	0.0093	42	10.11	0.09	11.79	1.59	622.33	621.83		
311.78	258.78	53.00	E-2	1.08	0.90	0.97	12.65	11.79	8.30	105.1	0.0075	45	9.51	0.09	11.88	1.41	621.92	621.52		
258.78	53.60	205.18	E-1	0.46	0.90	0.41	13.07	11.88	8.28	108.2	0.0080	45	9.80	0.35	12.23	1.49	621.43	619.79		
53.60	44.73	8.87	EXIST. OFFSITE	0.53	0.90	0.48	13.55	12.23	8.21	111.1	0.0084	45	10.06	0.01	12.25	1.57	619.71	619.63		
44.73	0.00	44.73	EXIST. OFFSITE	0.21	0.90	0.19	13.73	12.25	8.20	112.6	0.0087	45	10.20	0.07	12.32	1.62	619.59	619.20		
LAT. 'E-1'																				
31.47	0.00	31.47	E-1	0.46	0.90	0.41	0.41	10.00	8.74	3.6	0.0012	18	2.05	0.26	10.26	0.07	622.89	622.86	622.98	
LAT. 'E-2'																				
26.89	0.00	26.89	E-2	1.08	0.90	0.97	0.97	10.00	8.74	8.5	0.0029	21	3.53	0.13	10.13	0.19	623.21	623.13	623.45	
LAT. 'E-3'																				
14.88	0.00	14.88	E-3	0.33	0.90	0.30	0.30	10.00	8.74	2.6	0.0006	18	1.47	0.17	10.17	0.03	623.89	623.88		
LAT. 'E-4'																				
44.00	0.00	44.00	E-4	0.82	0.90	0.74	0.74	10.00	8.74	6.5	0.0017	21	2.68	0.27	10.27	0.11	624.24	624.17	624.38	
LAT. 'E-5'																				
30.44	0.00	30.44	E-5	1.86	0.50	0.93	0.93	10.00	8.74	8.1	0.0004	30	1.66	0.31	10.31	0.04	626.28	626.27	626.33	
LAT. 'E-6'																				
27.50	0.00	27.50	E-6	0.33	0.90	0.30	0.30	10.00	8.74	2.6	0.0006	18	1.47	0.31	10.31	0.03	628.06	628.04	628.10	
LAT. 'E-7'																				
110.00	0.00	110.00	E-7	2.58	0.90	2.32	2.32	10.00	8.74	20.3	0.0081	24	6.46	0.28	10.28	0.65	629.77	628.89	630.58	
LAT. 'E-8.1'																				
31.75	0.00	31.75	"E-8.1,8.2,8.3"	2.42	0.90	2.18	2.18	10.00	8.74	19.0	0.0144	21	7.92	0.07	10.07	0.97	630.74	630.28	631.95	
LAT. 'E-8.3'																				
5.00	0.00	5.00	E-8.3	2.17	0.90	1.95	1.95	10.00	8.74	17.1	0.0116	21	7.10	0.01	10.01	0.78				
LAT. 'E-9.1'																				
15.59	0.00	15.59	"E-9.1,9.2"	0.25	0.90	0.23	0.23	10.00	8.74	2.0	0.0004	18	1.11	0.23	10.23	0.02	631.06	631.05	631.08	
LAT. 'E-10'																				
37.50	0.00	37.50	E-10	0.54	0.90	0.49	0.49	10.00	8.74	4.2	0.0016	18	2.40	0.26	10.26	0.09	631.09	631.03		
LINE 'H'																				
537.61	480.00	57.61	H-7	1.57	0.90	1.41	1.41	10.00	8.74	12.4	0.0061	21	5.14	0.19	10.19	0.41	632.76	632.41		PARTIAL FLOW
480.00	446.62	33.38	H-6	0.14	0.90	0.13	1.54	10.19	8.69	13.4	0.0071	21	5.56	0.10	10.29	0.48	632.34	632.10		PARTIAL FLOW
446.62	287.45	159.17	H-5	0.29	0.90	0.26	1.80	10.29	8.67	15.6	0.0048	24	4.97	0.53	10.82	0.38	632.15	631.39		PARTIAL FLOW
287.45	180.00	107.45	H-4 & H-8	0.62	0.90	0.56	2.36	10.82	8.53	20.1	0.0079	24	6.40	0.28	11.10	0.64	631.14	630.29		
180.00	159.71	20.29	H-3	0.55	0.90	0.50	2.85	11.10	8.46	24.1	0.0061	27	6.07	0.06	11.16	0.57	630.32	630.20		
159.71	151.62	8.09	H-2	0.52	0.90	0.47	3.32	11.16	8.45	28.1	0.0082	27	7.06	0.02	11.18	0.77	630.00	629.93		
151.62	100.00	51.62	H-1	0.16	0.90	0.14	3.47	11.18	8.45	29.3	0.0089	27	7.36	0.12	11.29	0.84	629.86	629.40		
LAT. 'H-1'																				
31.75	0.00	31.75	H-1	0.16	0.90	0.14	0.14	10.00	8.74	1.3	0.0001	18	0.71	0.74	10.74	0.01	630.70	630.69	630.71	
LAT. 'H-2'																				
47.92	0.00	47.92	H-2	0.52	0.90	0.47	0.47	10.00	8.74	4.1	0.0015	18	2.32	0.34	10.34	0.08	630.76	630.69	630.86	
LAT. 'H-3'																				
36.35	0.00	36.35	H-3	0.55	0.90	0.50	0.50	10.00	8.74	4.3	0.0017	18	2.45	0.25	10.25	0.09	630.86	630.80		
LAT. 'H-4'																				
20.19	0.00	20.19	H-4 & H-8	0.62	0.90	0.56	0.56	10.00	8.74	4.9	0.0022	18	2.76	0.12	10.12	0.12				PARTIAL FLOW
LAT. 'H-5'																				
31.75	0.00	31.75	H-5	0.29	0.90	0.26	0.26	10.00	8.74	2.3	0.0005	18	1.29	0.41	10.41	0.03				PARTIAL FLOW
LAT. 'H-6'																				
27.14	0.00	27.14	H-6	0.14	0.90	0.13	0.13	10.00	8.74	1.1	0.0001	18	0.62	0.73	10.73	0.01				PARTIAL FLOW
LAT. 'H-7'																				
15.01	0.00	15.01	H-7	1.57	0.90	1.41	1.41	10.00	8.74	12.4	0.0061	21	5.14	0.05	10.05	0.41				PARTIAL FLOW

RECORD DRAWING

THE SEAL APPEARING ON THIS DOCUMENT WAS AUTHORIZED BY DAVID E. MEYERS, P.E. 81512

STATE OF TEXAS
DAVID E. MEYERS
81512
REGISTERED
PROFESSIONAL ENGINEER
12/16/00

DATE	DESCRIPTION	REF NO.
6/23/99	ISSUED FOR CONSTRUCTION	N/A
5/17/99	ISSUED FOR BID	N/A

STORM WATER CALCULATIONS
HYDRAULIC CALCULATIONS

ADDISON CIRCLE

PHASE II-B PUBLIC INFRASTRUCTURE

TOWN OF ADDISON, TEXAS

Huitt - Zollars, Inc.
3131 Mckinney Ave., Suite 600, Dallas, TX 75204
Phone (214) 871-3311/Fax (214) 871-0757

DESIGN	DRAWN	APPR.	SCALE	DATE	PROJECT NO.	NO.
HZI	HZI	DEM	N.T.S.	MAR. 99	01-1822-50	SW3

h:\proj\01182250\dgn\AUC30G06.DGN

B, AUC30G06, 3-5,8,13,15,20,23-29,32-34,37-39,43-52,55-61
PRF ROTATION=90.000000
Fr:\VIN\MILLER.TBL
Fr:\01182250\dgn\AUC30G06.DGN
Fr:\VIN\DALLAS\01850\PLOTTING\400MAUC30G06.PRF
Huitt-Zollars, Inc.
rog rdf logo1=, rog rdf name=, rog rdf texts=

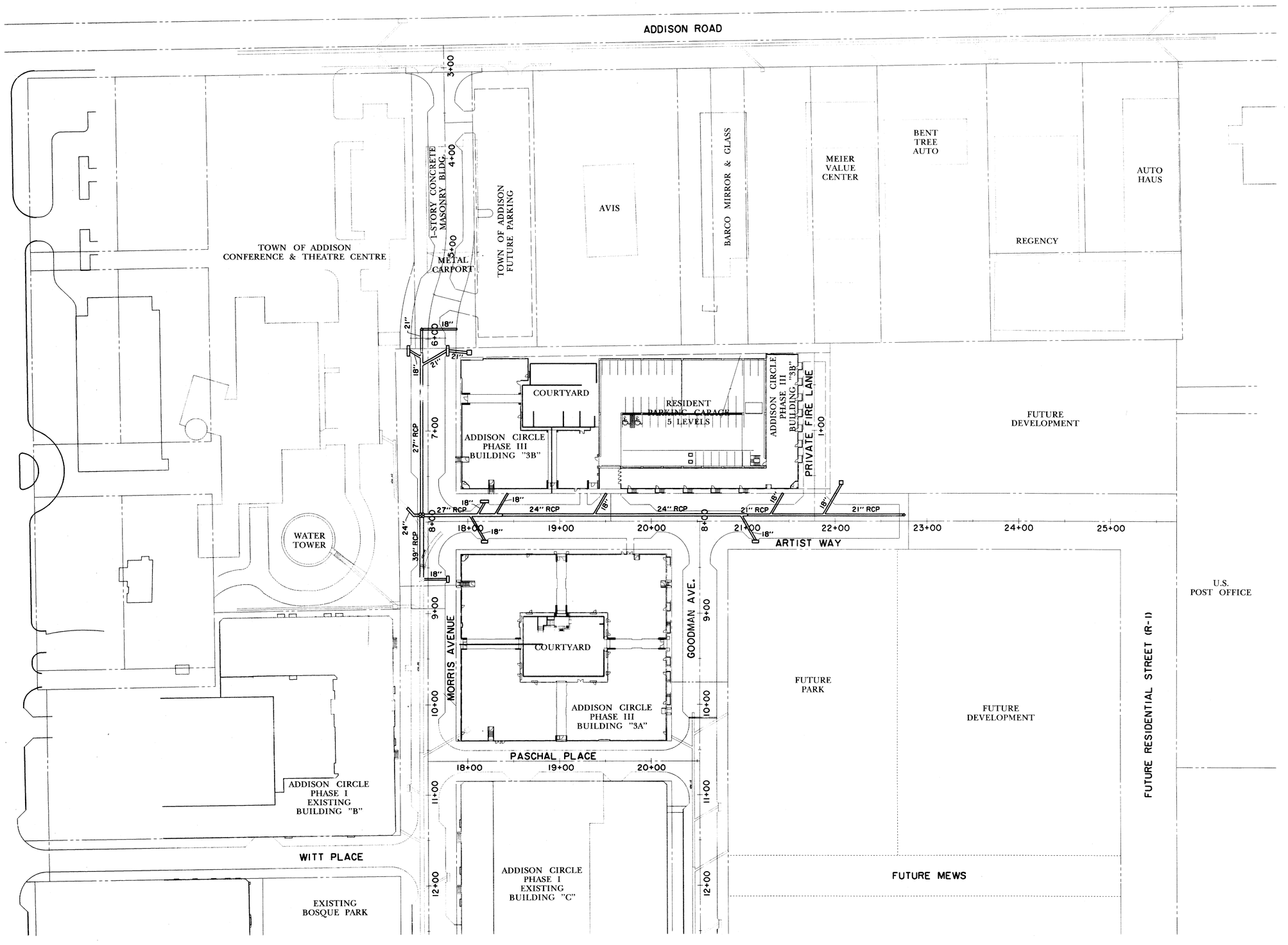

RECORD DRAWING

BENCHMARKS:

BM#5
"□" CUT ON 8' INLET ON NORTH CURB LINE OF GOODMAN AVE. ±75' EAST OF PASCHAL PLACE.
ELEV. 629.98

BM#6
"□" CUT AT ℄ OF 8' INLET AT THE SOUTHWEST CORNER OF MORRIS AVE. AND WITT PLACE.
ELEV. 627.29

BM#7
"□" CUT AT WEST CORNER OF ADDISON THEATRE CENTRE PARKING LOT, SECOND ENTRANCE NORTH OF ADDISON RD.
ELEV. 637.66

THE SEAL APPEARING ON THIS DOCUMENT WAS AUTHORIZED BY DAVID E. MEYERS, P.E. 81512

STATE OF TEXAS
DAVID E. MEYERS
81512
REGISTERED
PROFESSIONAL ENGINEER
12/13/00

DATE	DESCRIPTION	REF NO.
6/23/99	ISSUED FOR CONSTRUCTION	N/A
5/17/99	ISSUED FOR BID	N/A

STORM WATER SITE PLAN

ADDISON CIRCLE

PHASE II-B PUBLIC INFRASTRUCTURE

TOWN OF ADDISON, TEXAS

Huitt-Zollars, Inc.
3131 Mckinney Ave., Suite 600, Dallas, TX 75204
Phone (214) 871-3311/Fax (214) 871-0757

DESIGN	DRAWN	APPR.	SCALE	DATE	PROJECT NO.	NO.
HZI	HZI	DEM	1"=50'	MAR. 99	01-1822-50	SW4

h:\proj\01182250\dgn\AUC3SP04.DGN

0+19.17 LAT. 'E-8.3'
CONST. 5' X 5'
TYPE 'Y' INLET
W/CONC. APRON
TOP 635.08
LIP 634.00
F.L. 630.92

0+37.50 LAT. 'E-10' =
PAV. STA. 5+89.02, 30.50' LT.
END & PLUG

Q100=4.25 cfs

Q100=17.07 cfs

0+31.75 LAT. 'E-8.1' =
PAV. STA. 6+11.25, 20.5' LT.
℄ 10' MOD. REC. INLET (EXTRA DEPTH)
W/ BRICK TOP
T.C. 634.79
F.L. 628.79

0+31.75 LAT. 'E-8.1' =
0+00 LAT. 'E-8.3' =
PAV. STA. 6+12.50
CONN. TO BACK OF INLET

8+36.87 LINE 'E' =
0+00 LAT. 'E-8.1' =
PAV. STA. 6+27.13
60° FACTORY WYE

LAT. 'E-8.3'
21" RCP

ADDISON CIRCLE
PHASE III
BUILDING "3B"

ARTIST WAY

24" RCP

18+00 LINE 'H'

27" RCP

3B-5

0+27.50 LAT. 'E-6' =
PAV. STA. 8+62.50, 20.5' LT.
℄ 6' MOD. REC. INLET (EXTRA DEPTH)
WITH BRICK TOP
T.C. 629.96
F.L. 623.96

REMOVE EX.
24" AND
36" R.C.P.

Q100=
1.25 cfs
FROM BLDG.
PERIMETER
SUB-SURFACE
DRAINS

ADDISON CIRCLE
PHASE III
BUILDING "3A"

3A-3

Q100=6.45 cfs

REMOVE EX. INLET AND
+/- 12 L.F. 21" R.C.P.
INSTALL 21" PLUG

N

0 10 20 30 40
SCALE IN FEET

18+00

Q100=0.31 cfs

P-2

Q100=
1.65 cfs

LAT. 'E-10'
18" RCP
Q100=1.65 cfs

21" RCP

6+00

LAT. 'E-8.1'
21" RCP

7+00 MORRIS AVE.

LINE 'E'

8

7

8+00

LAT. 'E-9.1'
18" RCP

Q100=
0.31 cfs

27" RCP

Q100=1.34 cfs

LAT. 'E-6'
18" RCP

9+00

10+00

11+00

8" W

6E6

39" RCP

8" WW

Q100=3.62 cfs

Q100=2.60 cfs

8+75.00 LINE 'E' =
0+00 LAT. 'E-10' =
PAV. STA. 5+89.00
CONST. TYPE 'A' M.H.
RIM 634.73

8+49.54 LINE 'E' =
PAV. STA. 7+85.54
END 24" RCP
BEGIN 21" RCP

8+44.96 LINE 'E' =
0+00 LAT. 'E-9.1' =
PAV. STA. 6+19.04, 7' RT.
60° FACTORY WYE

Q100=20.29 cfs

0+15.59 LAT. 'E-9.1' =
PAV. STA. 6+11.25, 20.50' RT.
℄ 10' MOD. REC. INLET
WITH BRICK TOP
T.C. 634.79
F.L. 628.79

0+18 LAT. 'E-7'
CONNECT TO EX.
24" R.C.P.

0+08 LAT. 'E-7'
INSTALL 24"-45°
FACTORY BEND

6+71.50 LINE 'E' =
1+00 LINE 'H' =
0+00 LAT. 'E-7' =
PAV. STA. 7+92.50
CONST. TYPE 'B' M.H.
RIM 632.61

Q100=
14.63 cfs

6+01.50 LINE 'E' =
0+00 LAT. 'E-6' =
PAV. STA. 8+62.50, 7' RT.
CONNECT TO EX. TYPE 'B' M.H.
ADJUST EX. RIM ELEVATION
EX. RIM 629.6 +/-
PROP. RIM 629.93

Q100=8.50 cfs

WATER
TOWER

RECORD
DRAWING

BENCHMARKS:

BM#5
"□" CUT ON 8' INLET ON NORTH CURB LINE OF GOODMAN AVE. ±75' EAST OF PASCHAL PLACE.
ELEV. 629.98

BM#6
"□" CUT AT ℄ OF 8' INLET AT THE SOUTHWEST CORNER OF MORRIS AVE. AND WITT PLACE.
ELEV. 627.29

BM#7
"□" CUT AT WEST CORNER OF ADDISON THEATRE CENTRE PARKING LOT, SECOND ENTRANCE NORTH OF ADDISON RD.
ELEV. 637.66

THE SEAL APPEARING ON THIS DOCUMENT WAS AUTHORIZED BY DAVID E. MEYERS, P.E. 81512

STATE OF TEXAS
DAVID E. MEYERS
81512
REGISTERED
PROFESSIONAL ENGINEER
12/12/00

DATE	DESCRIPTION	REF NO.
6/23/99	ISSUED FOR CONSTRUCTION	N/A
5/17/99	ISSUED FOR BID	N/A

STORM WATER PLAN & PROFILE
LINE 'E' STA. 6+01.50 TO STA. 8+75.00

ADDISON CIRCLE
PHASE II-B PUBLIC INFRASTRUCTURE
TOWN OF ADDISON, TEXAS

Huitt - Zollars, Inc.
3131 Mckinney Ave., Suite 800, Dallas, TX 75204
Phone (214) 871-3311/Fax (214) 871-0757

DESIGN	DRAWN	APPR.	SCALE	DATE	PROJECT NO.	NO.
HZI	HZI	DEM	Hz 1"=20' V: 1"=6'	MAR. 99	01-1822-50	SW5

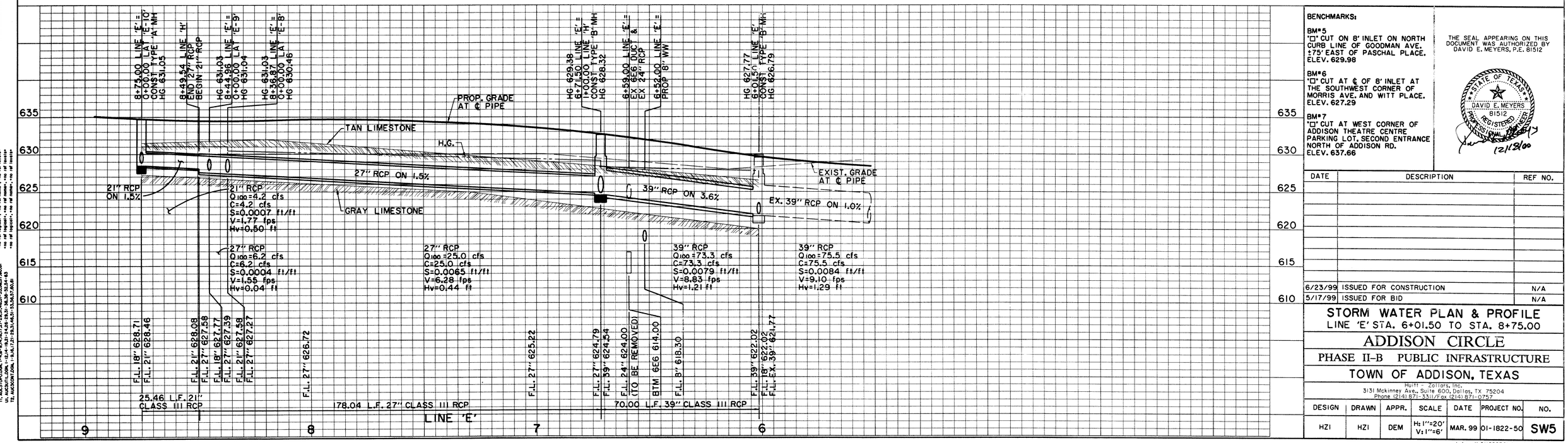

E, AUC3DBASE.DGN, I:\5\1\2\1\4\8\2\0\2\8\2\3\1\3\3\9\4\9\0\5\5\-\8\4\3
FI, AUC3DBASE.DGN, I:\4\4\3\4\1\2\8\2\0\2\8\2\3\1\3\3\9\4\9\0\5\5\-\8\4\3
TI, AUC3DTI.DGN, I:\4\4\3\4\1\2\8\2\0\2\8\2\3\1\3\3\9\4\9\0\5\5\-\8\4\3
UI, AUC3DUI.DGN, I:\4\4\3\4\1\2\8\2\0\2\8\2\3\1\3\3\9\4\9\0\5\5\-\8\4\3
TZ, AUC3DCONT.DGN, I:\9\6\1\2\1\2\8\2\0\3\1\3\3\9\4\6\5\-\5\5\6\5\7\8\0\4\3
PRF ROTATION=90.8000000
Fr \\ORL\LGN\TRL
h:\proj\01182250\dgn\AUC3D00.DGN
Mon Dec 18 17:05:05 2000
\\ORL\LGN\TRL
Huitt-Zollars, Inc.
h:\proj\01182250\dgn\AUC3D01.DGN
Mon Dec 18 17:05:05 2000
\\ORL\LGN\TRL
Huitt-Zollars, Inc.
ref texas+.rsc ref name=.rsc ref texas+
ref texas+.rsc ref name=.rsc ref texas+
ref texas+.rsc ref name=.rsc ref texas+
ref texas+.rsc ref name=.rsc ref texas+
ref texas+.rsc ref name=.rsc ref texas+
h:\proj\01182250\dgn\AUC3D01.DGN

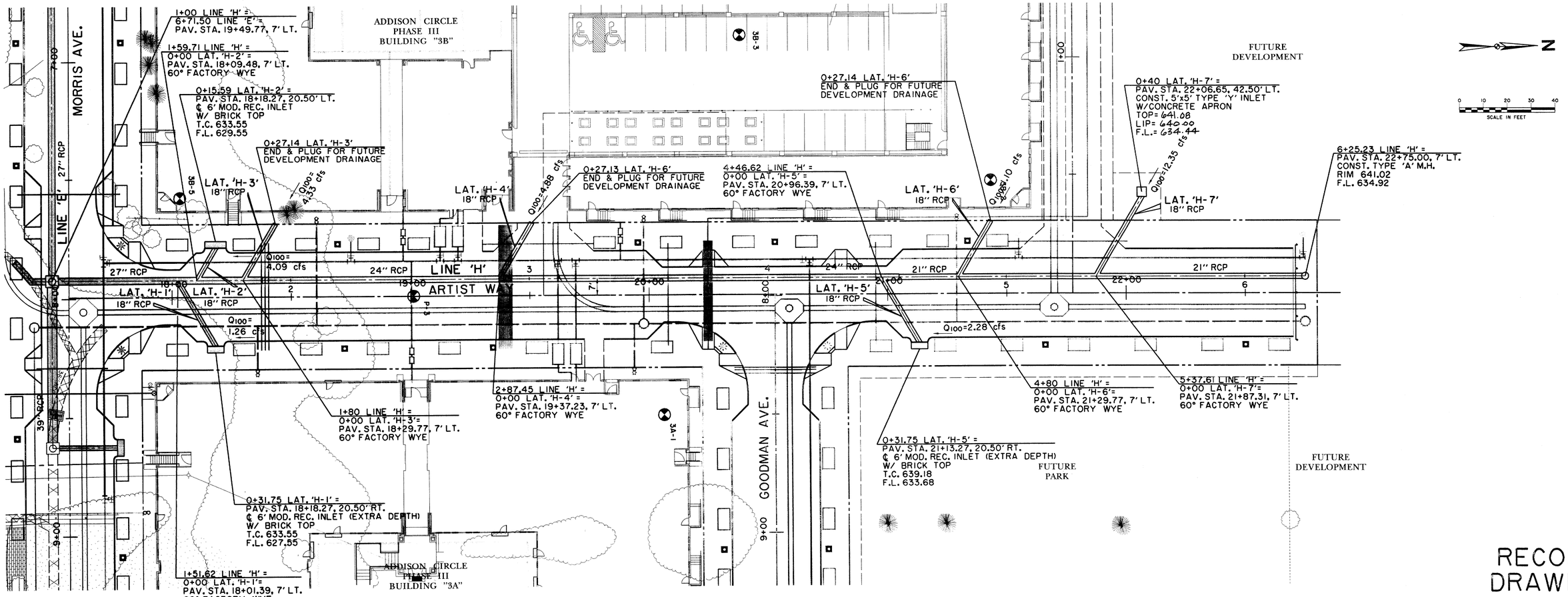

RECORD DRAWING

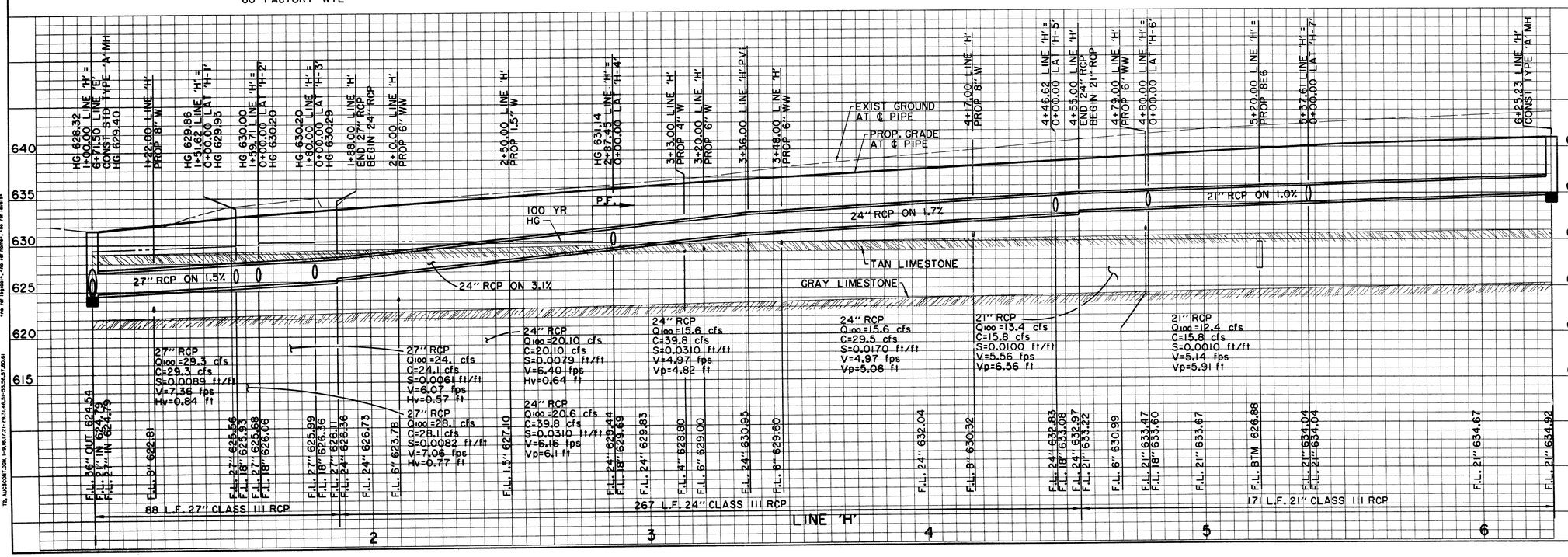

BENCHMARKS:

BM*5
"□" CUT ON 8' INLET ON NORTH CURB LINE OF GOODMAN AVE. ±75' EAST OF PASCHAL PLACE. ELEV. 629.98

BM*6
"□" CUT AT ℄ OF 8' INLET AT THE SOUTHWEST CORNER OF MORRIS AVE. AND WITT PLACE. ELEV. 627.29

BM*7
"□" CUT AT WEST CORNER OF ADDISON THEATRE CENTRE PARKING LOT, SECOND ENTRANCE NORTH OF ADDISON RD. ELEV. 637.66

THE SEAL APPEARING ON THIS DOCUMENT WAS AUTHORIZED BY DAVID E. MEYERS, P.E. 81512

STATE OF TEXAS · DAVID E. MEYERS · 81512 · REGISTERED PROFESSIONAL ENGINEER · 12/18/00

DATE	DESCRIPTION	REF NO.
6/23/99	ISSUED FOR CONSTRUCTION	N/A
5/17/99	ISSUED FOR BID	N/A

STORM WATER PLAN & PROFILE
LINE 'H' STA. 1+00.00 TO STA. 6+25.23

ADDISON CIRCLE
PHASE II-B PUBLIC INFRASTRUCTURE
TOWN OF ADDISON, TEXAS

Huitt - Zollars, Inc.
3131 Mckinney Ave., Suite 600, Dallas, TX 75204
Phone (214) 871-3311/Fax (214) 871-0757

DESIGN	DRAWN	APPR.	SCALE	DATE	PROJECT NO.	NO.
HZI	HZI	DEM	H: 1"=20' V: 1"=6'	MAR. 99	01-1822-50	SW6

h:\proj\01182250\dgn\AUC3DG02.DGN

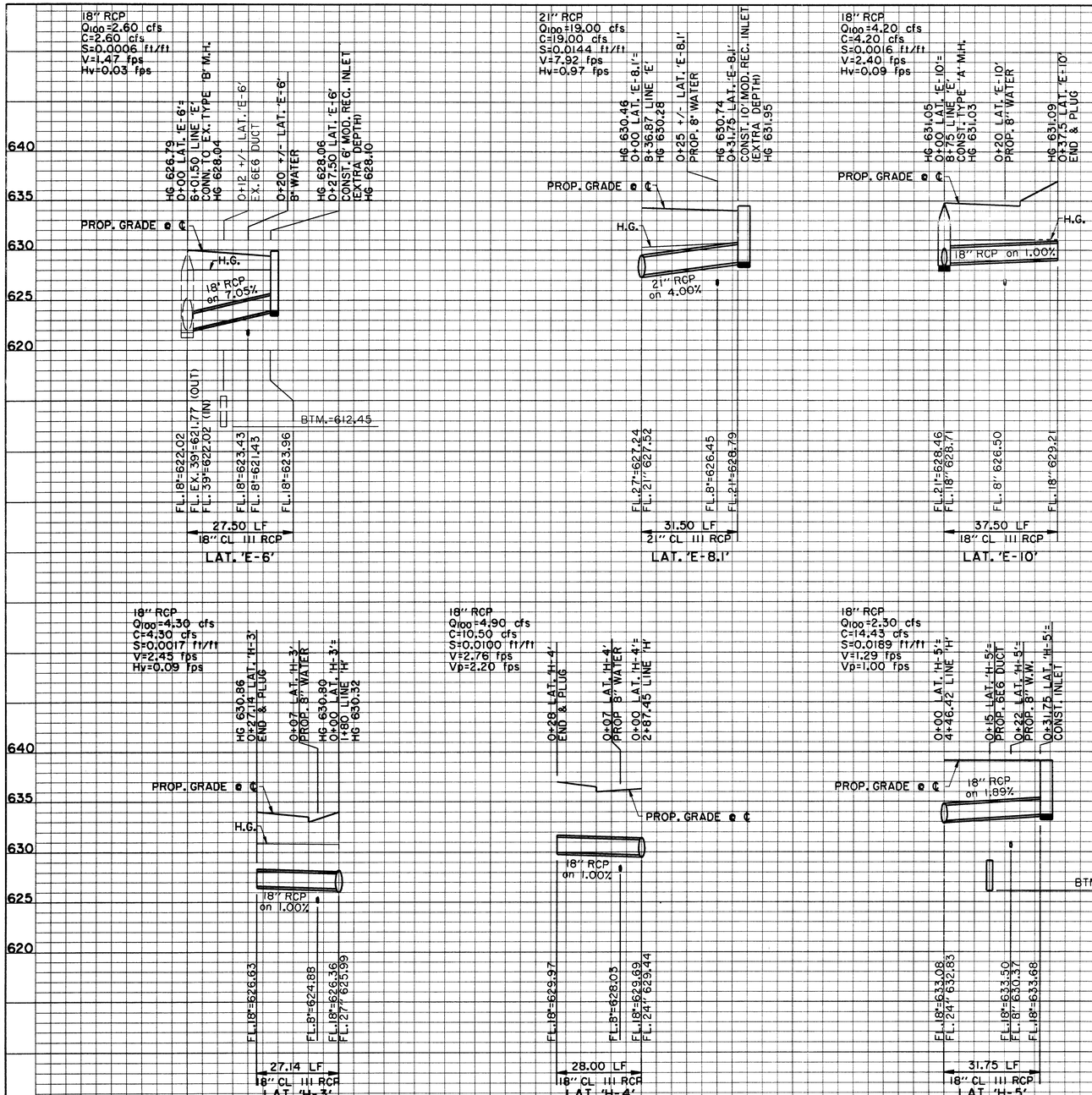

RECORD DRAWING

THE SEAL APPEARING ON THIS DOCUMENT WAS AUTHORIZED BY DAVID E. MEYERS, P.E. 81512

STATE OF TEXAS · DAVID E. MEYERS · 81512 · REGISTERED PROFESSIONAL ENGINEER · 12/18/00

DATE	DESCRIPTION	REF NO.
6/23/99	ISSUED FOR CONSTRUCTION	N/A
5/17/99	ISSUED FOR BID	N/A

STORM WATER LATERAL PROFILES
LATERALS E & H
ADDISON CIRCLE
PHASE II-B PUBLIC INFRASTRUCTURE

TOWN OF ADDISON, TEXAS

Huitt - Zollars, Inc.
3131 Mckinney Ave., Suite 600, Dallas, TX 75204
Phone (214) 871-3311/Fax (214) 871-0757

DESIGN	DRAWN	APPR.	SCALE	DATE	PROJECT NO.	NO.
HZI	HZI	DEM	N.T.S.	MAR. 99	01-1822-50	SW7

h:\proj\01182250\dgn\AUC3DG07.DGN

h:\proj\01182250\dgn\AUC3D07.DGN
\\XREFS\ARCH\PROJECTINFO\DOMAIN\AUC3D07.PRF
Huitt-Zollars, Inc.
PRF ROTATION=90.0000000
F:\tm\MILLER.TBL
B, AUC3BLOCKN, 3-5,8,13,16,20,23-29,32-34,37-40,43-55,58-61
no ref logical=, no ref name=, no ref texas

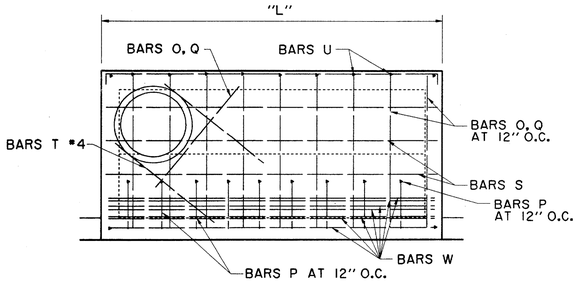

INLET PLAN
REINFORCING STEEL FOR BRICK ON INLET
N.T.S.

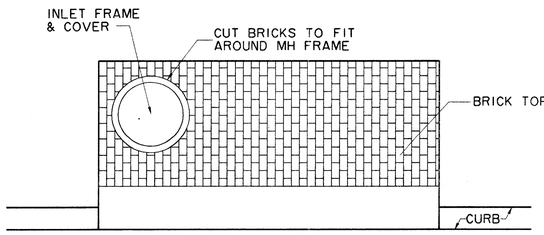

INLET PLAN
BRICK ON INLET
N.T.S.

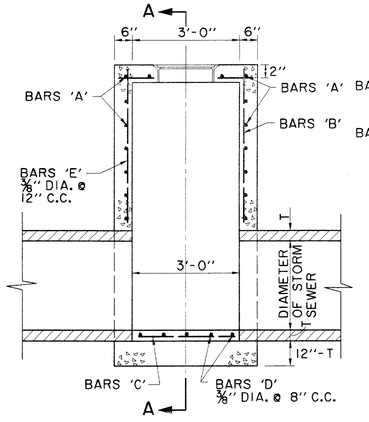

ELEVATION
N.T.S.

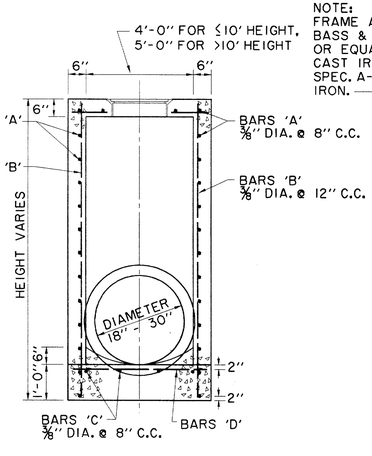

SECTION A-A
N.T.S.

NOTE:
FRAME AND COVER SHALL BE BASS & HAYS PATTERN NO. 400-24 OR EQUAL AND SHALL BE OF GRAY CAST IRON CONFORMING TO A.S.T.M. SPEC. A-48 FOR CLASS 30 CAST IRON.

PROVIDE ¾" PREMOLDED EXPANSION JOINT BETWEEN MANHOLE AND CONCRETE PAVEMENT AND SEAL WITH HOT POURED RUBBER.

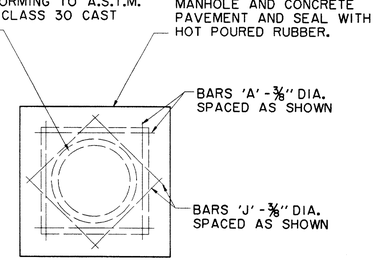

TOP PLAN
TYPE A & TYPE B
STORM SEWER MANHOLE
N.T.S.
NOTE MAXIMUM PIPE SIZE TO BE USED 78"

TYPE A STORM SEWER MANHOLE
(FOR PIPE 18" TO 30" IN DIAMETER)

NOTE: STRUCTURAL CONCRETE TO BE MINIMUM 4200 p.s.i. UNLESS NOTED OTHERWISE

NOTE: MANHOLES AND INLETS GREATER THAN 4' IN DEPTH SHALL HAVE BASS AND HAYES MODEL MA STEPS OR APPROVED EQUAL

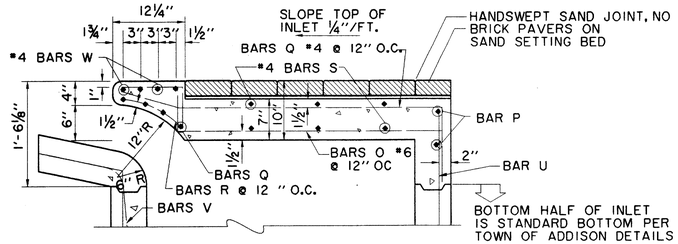

FOR EXISTING INLETS TO BE MODIFIED, BREAK OUT TOP ±20". TIE NEW STEEL TO OLD AND POUR MODIFIED TOP.

SECTION C-C - DETAIL
BRICK ON INLET
N.T.S.

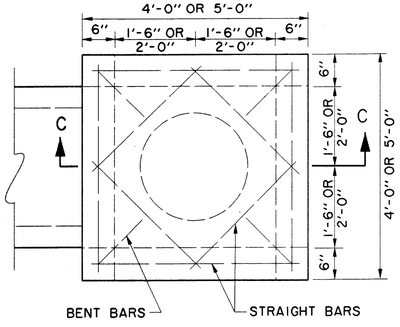

ALL REINFORCING SHALL BE NO. 5 BARS.

STANDARD TYPE "Y" INLET
N.T.S.

NOTE: ALL 'Y' INLETS TO HAVE CONCRETE APRON AROUND INLET

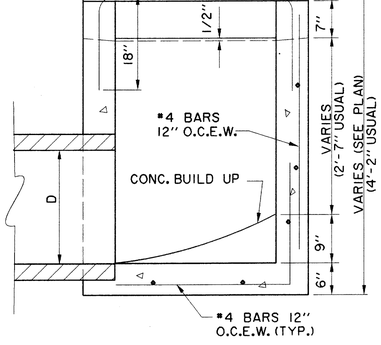

SECTION C-C
N.T.S.

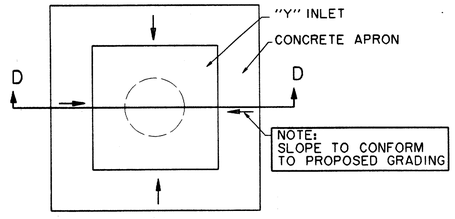

"Y" INLET CONCRETE APRON PLAN
N.T.S.

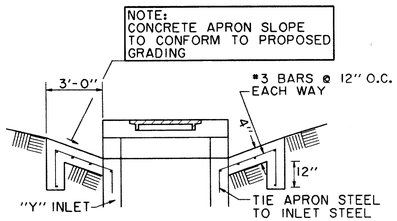

SECTION D-D
N.T.S.

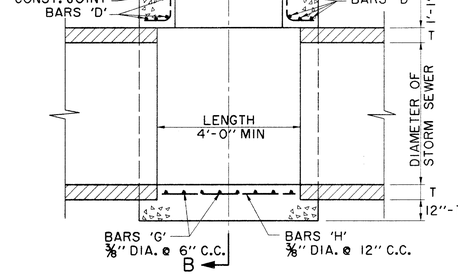

ELEVATION
N.T.S.

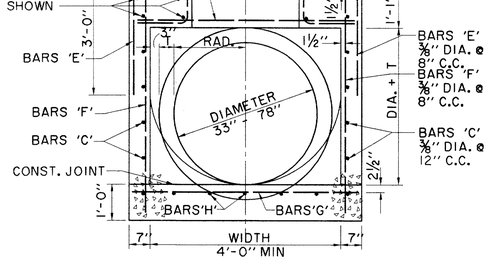

SECTION B-B
N.T.S.

TYPE B STORM SEWER MANHOLE
(FOR PIPE 33" TO 78" IN DIAMETER)

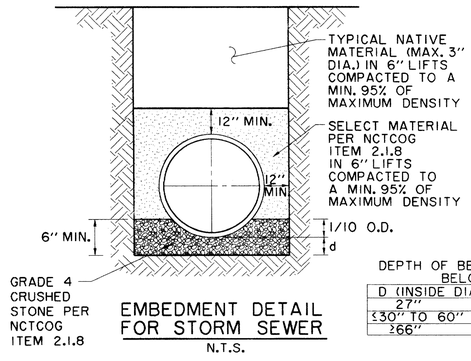

EMBEDMENT DETAIL FOR STORM SEWER
N.T.S.

DEPTH OF BEDDING MATERIAL BELOW PIPE

D (INSIDE DIAMETER)	d (MIN.)
27"	3"
≤30" TO 60"	4"
≥66"	6"

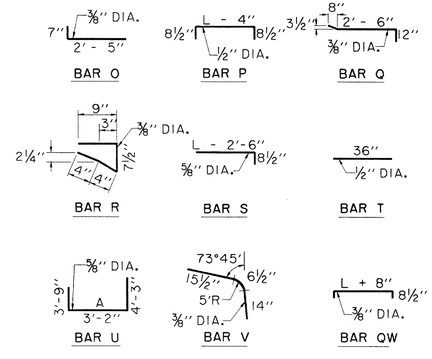

BAR DIAGRAMS (BRICK ON INLET)
N.T.S.

NOTE: BAR DESIGNATIONS AND DIMENSIONS ARE DIFFERENT FROM STEEL SCHEDULE FOR REGULAR INLETS.

RECORD DRAWING

THE SEAL APPEARING ON THIS DOCUMENT WAS AUTHORIZED BY DAVID E. MEYERS, P.E. 81512

STATE OF TEXAS
DAVID E. MEYERS
81512
REGISTERED
PROFESSIONAL ENGINEER
12/18/00

DATE	DESCRIPTION	REF NO.
6/23/99	ISSUED FOR CONSTRUCTION	N/A
5/17/99	ISSUED FOR BID	N/A

STORM WATER DETAILS

ADDISON CIRCLE

PHASE II-B PUBLIC INFRASTRUCTURE

TOWN OF ADDISON, TEXAS

Huitt - Zollars, Inc.
3131 Mckinney Ave., Suite 600, Dallas, TX 75204
Phone (214) 871-3311 Fax (214) 871-0757

DESIGN	DRAWN	APPR.	SCALE	DATE	PROJECT NO.	NO.
HZI	HZI	DEM	N.T.S.	MAR. 99	01-1822-50	SW8

h:\proj\01182250\dgn\AUC3TY09.DGN

PRF ROTATION=90.000000
F:\SS\MILLER.TBL
h:\proj\01182250\dgn\AUC3TY09.DGN
Fri Dec 8 14:45:18 2000
\\NTDALLASE1\BSKO\PLOTTING\400MAUC3TY09.PRF
Huitt-Zollars, Inc.
BL:AUC3SD.DGN; 4,5,6,7,8,9,10,20,23-28,32 34-37 39,43-52,55-61
no ref logical, *no ref name*, *no ref levels*

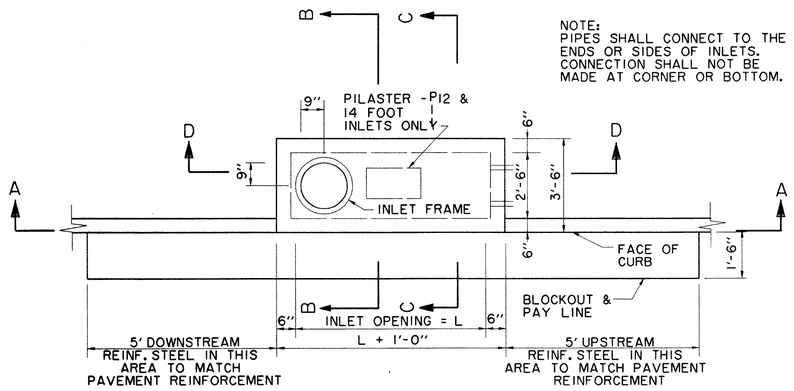

PLAN - STANDARD INLET
N.T.S.

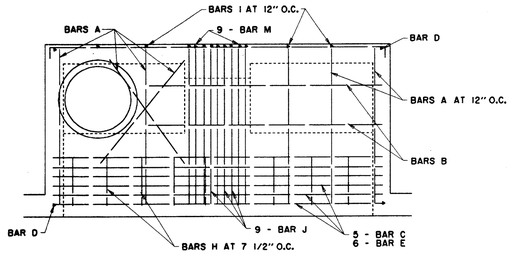

INLET PLAN
N.T.S.

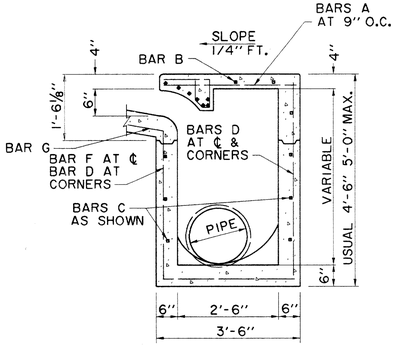

SECTION B-B
6' & 8' INLETS
N.T.S.

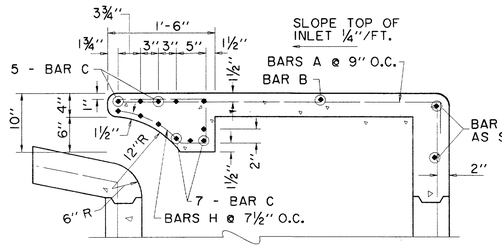

SECTION C-C - DETAIL
6' & 8' INLETS
N.T.S.

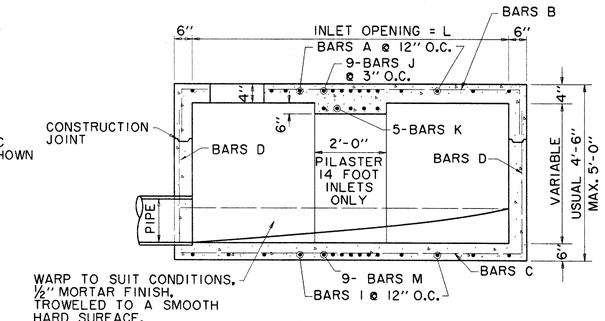

SECTION D-D
14' INLET
N.T.S.

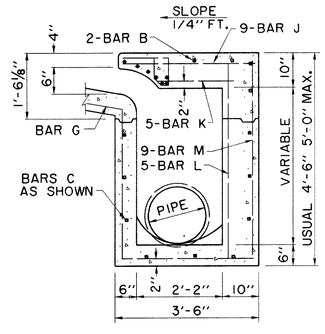

SECTION B-B
10' & 14' INLETS
N.T.S.

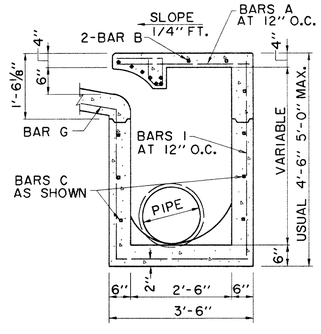

SECTION C-C
10' & 14' INLETS
N.T.S.

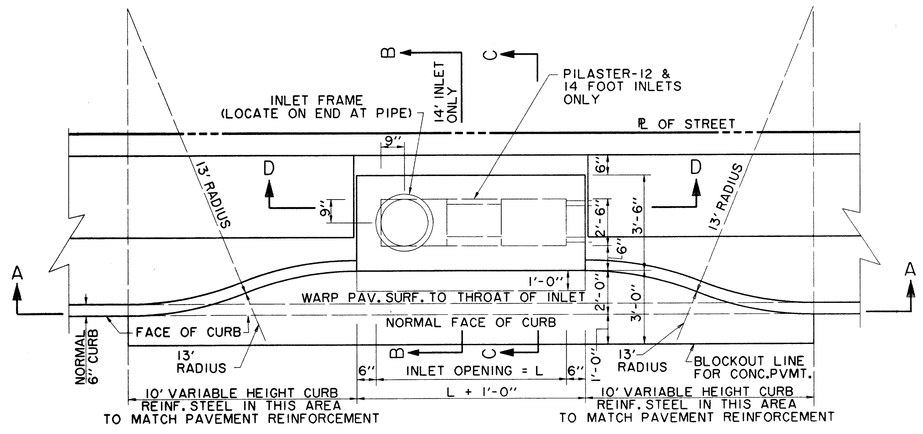

PLAN - RECESSED INLET
N.T.S.

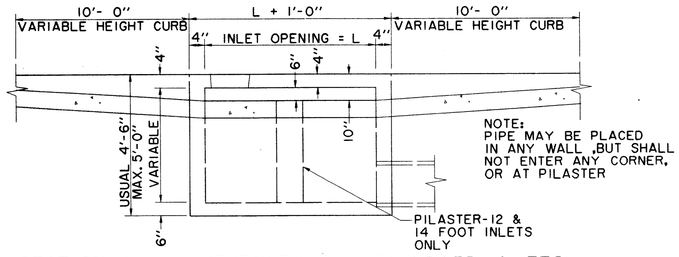

SECTION A-A - RECESSED AND STANDARD INLETS
6, 8, 10 & 14 FOOT INLETS
N.T.S.

REINFORCING STEEL SCHEDULE

DIMENSION SHOWN ARE FOR MAXIMUN SIZE INLETS

INLET LENGHT	BAR TYPE	BAR DIA. (1/8IN)	NO. REQ'D	BAR DIMENSIONS A	B	C
6	A	3	9	3'-2''	0'-3''	
	B	3	1	4'-10''		
	C	4	15	6'-8''	0'-6''	
	D	4	5	4'-8''		
	F	4	1	3'-2''		
	G	3	5	2'-0''	1'-3''	
	H	6	6	•	•	•
	N	3	3	3'-2''	3'-2''	3'-2''
8	A	3	12	3'-2''	0'-3''	
	B	3	1	6'-10''		
	C	4	15	8'-8''	0'-6''	
	D	4	5	4'-8''		
	F	4	1	3'-2''		
	G	3	5	2'-0''	1'-3''	
	H	6	8	•	•	•
	N	3	3	3'-2''	3'-2''	3'-2''
10	A	3	10	3'-2''	0'-3''	
	B	3	2	8'-10''		
	C	4	16	10'-8''	0'-6''	
	D	4	4	4'-8''		
	E	5	6	10'-8''		
	G	3	5	2'-0''	1'-3''	
	H	3	15	•	•	•
	I	4	8	4'-8''	3'-2''	3'-2''
	L	4	5	4'-3''		
12	A	3	12	3'-2''	0'-3''	
	B	3	2	10'-10''		
	C	4	16	12'-8''	0'-6''	
	D	4	4	4'-8''		
	E	5	6	12'-8''		
	G	3	5	2'-0''	1'-3''	
	H	3	18	•	•	•
	I	4	10	4'-8''	3'-2''	3'-2''
	J	5	9	3'-2''	1'-3''	
	K	4	5	2'-3''		
	L	4	5	4'-3''		
	M	5	9	4'-3''	3'-2''	3'-9''
14	A	3	14	3'-2''	0'-3''	
	B	3	2	10'-10''		
	C	4	16	14'-8''	0'-6''	
	D	4	4	4'-8''		
	E	5	6	14'-8''		
	G	3	5	2'-0''	1'-3''	
	H	3	21	•	•	•
	I	4	12	4'-8''	3'-2''	3'-2''
	J	5	9	3'-2''	1'-3''	
	K	4	5	2'-3''		
	L	4	5	4'-3''		
	M	5	9	4'-3''	3'-2''	3'-9''

• SEE DIAGRAM FOR DIMENSIONS

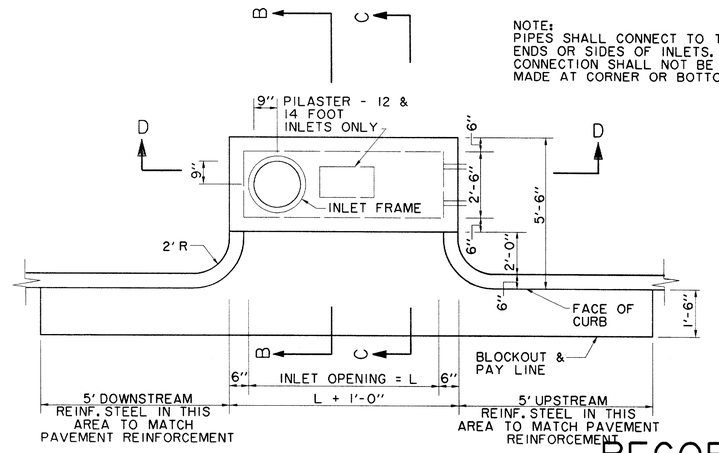

PLAN - MODIFIED RECESSED INLET
N.T.S.

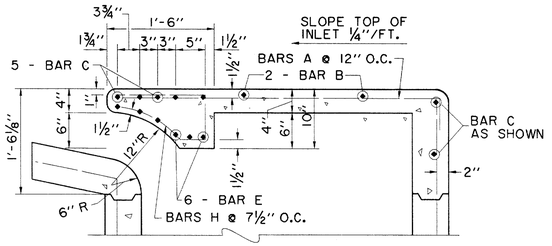

SECTION C-C - DETAIL
10' & 14' INLETS
N.T.S.

BAR DIAGRAMS

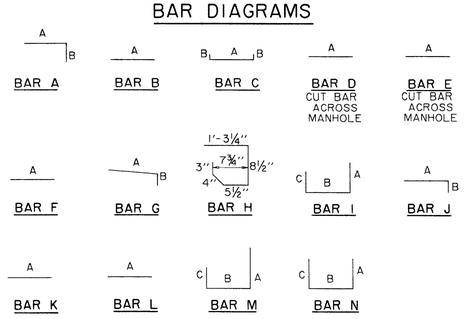

RECORD DRAWING

THE SEAL APPEARING ON THIS DOCUMENT WAS AUTHORIZED BY DAVID E. MEYERS, P.E. 81512

STATE OF TEXAS · DAVID E. MEYERS · 81512 · REGISTERED PROFESSIONAL ENGINEER · 12/18/00

DATE	DESCRIPTION	REF NO.
6/23/99	ISSUED FOR CONSTRUCTION	N/A
5/17/99	ISSUED FOR BID	N/A

STORM WATER DETAILS

ADDISON CIRCLE

PHASE II-B PUBLIC INFRASTRUCTURE

TOWN OF ADDISON, TEXAS

Huitt - Zollars, Inc.
3131 Mckinney Ave., Suite 600, Dallas, TX 75204
Phone (214) 871-3311/Fax (214) 871-0757

DESIGN	DRAWN	APPR.	SCALE	DATE	PROJECT NO.	NO.
HZI	HZI	DEM	N.T.S.	MAR. 99	01-1822-50	SW9

h:\proj\01182250\dgn\AUC3TY02.DGN

B:\AUC300\DGN\AUC3TY02.DGN
PRF ROTATION=90.000000
F:\TM\MILLER.TBL
<ref nf logo1>, <ref nf name>, <ref nf levels>
Huitt-Zollars, Inc.

LIST OF ABBREVIATIONS

@	at
A	Area
B-B	Back to Back
BM	Bench Mark
BTM.	Bottom
B.W.	Bottom of wall
C	Capacity or Runoff Coefficient
C.C.	Center to Center
C.R.	Curb Return
CATV	Cable TV
CD	Chord Distance
CL	Centerline
CLR.	Clear
Conc.	Concrete
CONST.	Construct
DIA.	Diameter
DB	Direct Bury
E	East
E.P.	Edge of Pavement
EQ.	Equal
EX.	Existing
F.F.	Finished Floor
F.L.	Flowline
FH	Fire Hydrant
GM	Gas Meter
HG	Hydraulic Gradient
HV	Velocity Head
I.R.	Iron Rod
I.R.F.	Iron Rod Found
I.R.S.	Iron Rod Set
I100	100 Year Intensity
L	Length
L.F.	Linear Feet
LAT.	Lateral
LT.	Left
m	Mid-ordinate
MAX.	Maximum
M.J.	Mechanical Joint
MH	Manhole or Metal Halide
MIN.	Minimum
MOD.	Modified
N	North
NA	Not Applicable
N.T.S.	Not to Scale
O.C.	On Center
O.C.E.W.	On Center Each Way
O.D.	Outside Diameter
PAR.	Parabolic
P.C.	Point of Curvature
P.F.	Partial Flow
P.I.	Point of Intersection
P.R.C.	Point of Reverse Curvature
PAV.	Paving
PP	Power Pole
PROP.	Proposed
P.T.	Point of Tangency
PB	Pull Box
P.V.I.	Point of Vertical Intersection
P.V.C.	Point of Vertical Curvature
P.V.R.C.	Point of Vertical Reverse Curvature
PVM'T.	Pavement
P.V.T.	Point of Vertical Tangency
Q100	100 year flow
R	Radius
REINF.	Reinforced
REC.	Recessed
RCP	Reinforced Concrete Pipe
RCCP	Reinforced Concrete Cylinder Pipe
R.O.W.	Right of Way
RR	Railroad
RT.	Right
S	Slope or South
SCH.	Schedule
SS	Sanitary Sewer
STD.	Standard
STA.	Station
STAB.	Stabilized
SW	Storm Water
SWBT	Southwestern Bell Telephone
T	Tangent
T.C.	Top of Curb
tc	Time of Concentration
T.P.	Top of Pavement
T.W.	Top of Wall
Typ.	Typical
V	Velocity
VP	Partial Flow Velocity
V.C.	Vertical Curve
W	West
W/	with
WM	Water Meter
W	Water
WW	Waste Water
Δ	Angle of Deflection

LEGEND

ELECTRIC —OHE—
- LIGHT POLE
- PP POWER POLE
- GUY WIRE

TELEPHONE —T—
- TELE MH TELEPHONE MANHOLE
- TELEPHONE PEDESTAL
- TS TELEPHONE SIGN

GAS —G—
- GM GAS METER
- GS GAS SIGN

LAND USE
- R R RAILROAD SIGN
- SIGN

SURVEY
- I.R. FOUND IRON ROD
- BENCHMARK

WASTEWATER —WW—
- WW MH WASTEWATER MANHOLE
- CO CLEANOUT

WATER —W—
- FH FIRE HYDRANT
- WM METER
- T WATER VALVE

MISC.
- 48" RCP EX. STORM SEWER
- CHAIN LINK FENCE
- WOOD FENCE
- EXISTING ASPHALT
- EXISTING DIRT OR GRAVEL
- EX. CONCRETE
- TREE/TREE LINE
- EXISTING CURB
- PROP. CURB
- PROP. EDGE OF PAVEMENT NO CURB
- EX. PROPERTY LINE
- PROP. CENTERLINE
- PROP. R.O.W.
- PROP. INLET
- T.P. TOP OF PAVEMENT
- T.C. TOP OF CURB
- CR CURB RETURN
- EX. G EXISTING GUTTER
- EX. T.C. EXISTING TOP OF CURB
- B-20 BORING LOCATION
- EXISTING BRICKS
- PAVEMENT REMOVAL

RECORD DRAWING

THE SEAL APPEARING ON THIS DOCUMENT WAS AUTHORIZED BY DAVID E. MEYERS, P.E. 81512

STATE OF TEXAS — DAVID E. MEYERS — 81512 — REGISTERED PROFESSIONAL ENGINEER — 12/18/00

DATE	DESCRIPTION	REF NO.
6/23/99	ISSUED FOR CONSTRUCTION	N/A
5/17/99	ISSUED FOR BID	N/A

LEGEND & ABBREVIATIONS

ADDISON CIRCLE

PHASE II-B PUBLIC INFRASTRUCTURE

TOWN OF ADDISON, TEXAS

Huitt - Zollars, Inc.
3131 Mckinney Ave., Suite 600, Dallas, TX 75204
Phone (214) 871-3311/Fax (214) 871-0757

DESIGN	DRAWN	APPR.	SCALE	DATE	PROJECT NO.	NO.
HZI	HZI	DEM	N.T.S.	MAR. 99	01-1822-50	P1

h:\proj\01182250\dgn\AUC3PV06.DGN

B_AUC3BLOCK, 4.5,8.5,8.25,23.25,32.54,37.39,43.25,55.61 log rf log:on, log rf name:, log rf levels
log rf log:on, log rf name:, log rf levels
log rf log:on, log rf name:, log rf levels
log rf log:on, log rf name:, log rf levels
log rf log:on, log rf name:, log rf levels
log rf log:on, log rf name:, log rf levels
log rf log:on, log rf name:, log rf levels
log rf log:on, log rf name:, log rf levels
PRF ROTATION=90.000000
F:\TX\MILLER.TBL
h:\proj\01182250\dgn\AUC3PV06.DGN
h:\proj\01182250\dgn\AUC3PV06.PRF
\\VIDALLARD\DISKO\PLOTTING\400\AUC3PV06.PRF
Huitt-Zollars, Inc.

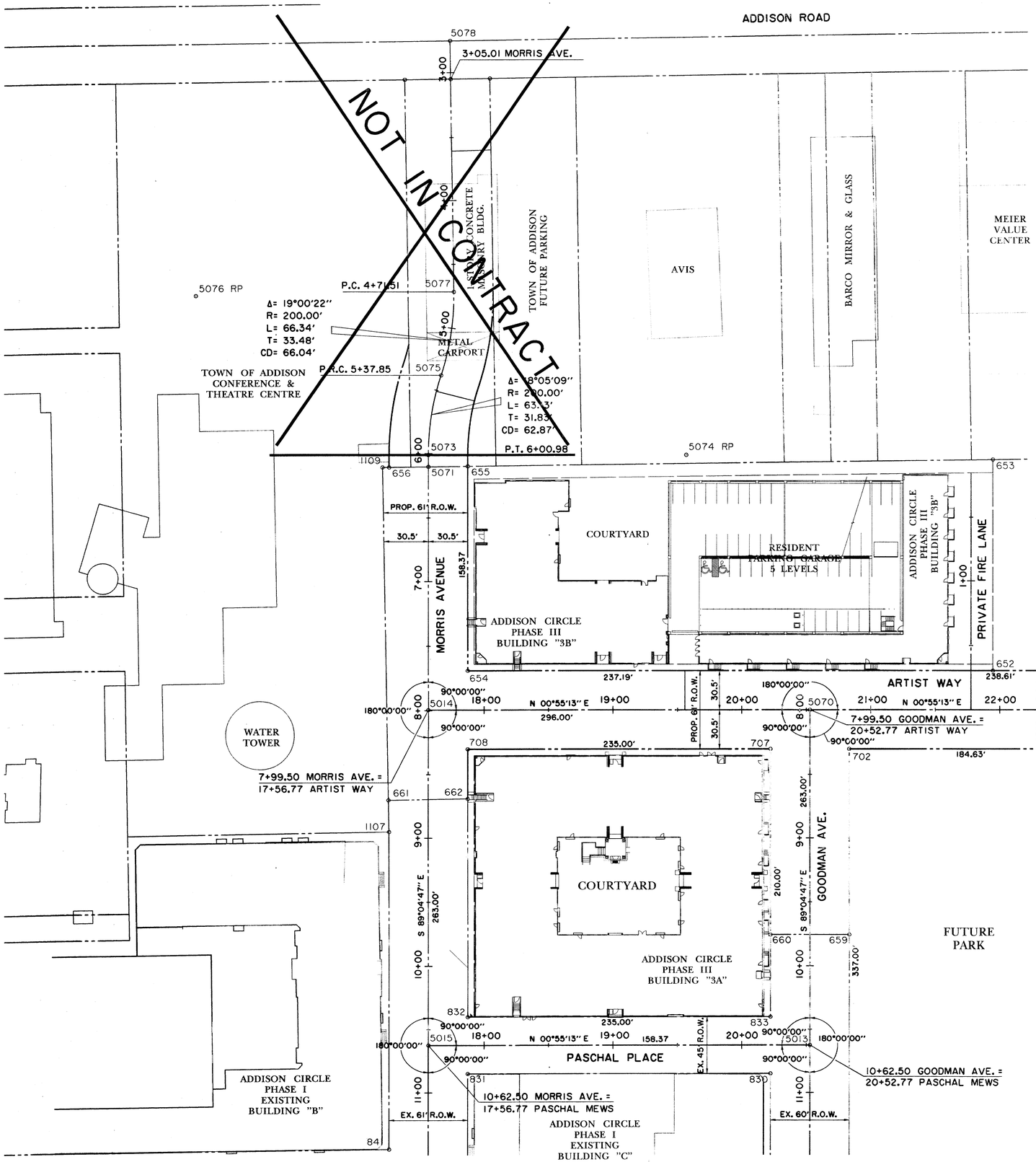

POINT #	NORTHING	EASTING
652	11495.9763	9381.0011
653	11498.6175	9216.5752
654	11088.0289	9374.4482
655	11090.5886	9215.1014
656	11029.5842	9214.8811
657	11579.7156	9443.3541
658	11580.6954	9382.3620
659	11360.6741	9585.6757
660	11319.6820	9584.6959
661	11024.9691	9474.4325
662	11086.4246	9474.3237
702	11383.0110	9440.1944
703	11810.5829	9447.0626
707	11322.0189	9439.2147
708	11087.0492	9435.4403
724	11567.6142	9443.1597
830	11317.9233	9694.1818
831	11082.9536	9690.4074
832	11083.6764	9645.4132
833	11318.6460	9649.1876
841	11021.0114	9748.5754
1107	11025.0134	9499.4325
1109	11024.5095	9214.8627
5013	11348.7807	9672.1746
5014	11057.0430	9404.4544
5015	11052.8189	9667.4205
5070	11353.0048	9409.2085
5071	11060.0864	9214.9912
5072	11580.2055	9412.8581
5073	11060.2314	9205.9632
5074	11260.2056	9209.1754
5075	11071.1088	9144.0418
5076	10882.0120	9078.9081
5077	11082.0120	9078.9081
5078	11082.0120	8882.4100

N

0 20 40 60 80
SCALE IN FEET

NOTES:

1. ALL CENTERLINE PC'S, PT'S AND PI'S WILL BE SET ONE TIME FOR CONSTRUCTION HORIZONTAL CONTROL. IT IS THE RESPONSIBILITY OF THE CONTRACTOR TO MAINTAIN THIS CONTROL. IN ADDITION, THE CONTRACTOR MAY FIND PROPERTY CORNERS FOR BLOCKS D & E AS PART OF THE PRIVATE DEVELOPMENT PLAT.

2. CONTRACTOR SHALL MAINTAIN CONTROL POINTS FOR THE USE BY THE INSTALLERS OF THE PRIVATE UTILITIES. (TU ELECTRIC, SOUTHWESTERN BELL, LONE STAR GAS, TCI CABLEVISION ETC...)

RECORD DRAWING

THE SEAL APPEARING ON THIS DOCUMENT WAS AUTHORIZED BY DAVID E. MEYERS, P.E. 81512

STATE OF TEXAS
DAVID E. MEYERS
81512
REGISTERED PROFESSIONAL ENGINEER
12/18/00

DATE	DESCRIPTION	REF NO.
6/23/99	ISSUED FOR CONSTRUCTION	N/A
5/17/99	ISSUED FOR BID	N/A

HORIZONTAL CONTROL PLAN

ADDISON CIRCLE

PHASE II-B PUBLIC INFRASTRUCTURE

TOWN OF ADDISON, TEXAS

Huitt - Zollars, Inc.
3131 Mckinney Ave., Suite 600, Dallas, TX 75204
Phone (214) 871-3311/Fax (214) 871-0757

DESIGN	DRAWN	APPR.	SCALE	DATE	PROJECT NO.	NO.
HZI	HZI	DEM	1"=40'	MAR. 99	01-1822-50	P2

h:\proj\01182250\dgn\AUC3HC01.DGN

PRF ROTATION=0.850000
F:\TXR\MILLER.TBL
h:\proj\01182250\dgn\AUC3HC01.DGN
\\HZDALLAS1\SHSO\PLOTTING\400NAUC3HC01.PRF
Huitt-Zollars, Inc.
T, AUC3TOPO.DGN, 51
L, AUC3HC01.DGN, 1-14,18,30-37,40-49,51-63
P, AUC3BASE.DGN, 1-3,8,9,12
B, AUC3BD.DGN, 3,13,20,53,58,59-61
no ref layers, *no ref items*, *no ref levels*

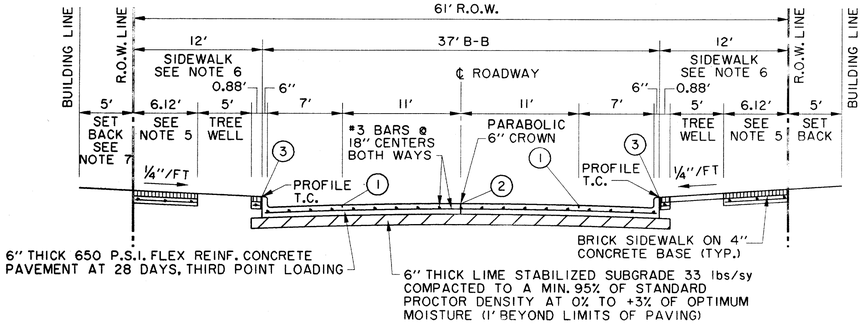

2 LANES UNDIVIDED
MORRIS AVENUE, GOODMAN AVENUE & ARTIST WAY
(SEE PLAN VIEW FOR NECK-DOWN AREAS)

NOTES:

1. BACKFILL MATERIAL IS NOT A SEPARATE PAY ITEM. MATERIAL ACQUIRED FROM EXCAVATION MAY BE USED IF APPROVED BY ENGINEER.

2. PAY LINE FOR UNCLASSIFIED STREET EXCAVATION IS THE RIGHT-OF-WAY LINE WHEN A BUILDING IS BEING CONSTRUCTED ADJACENT TO THE RIGHT-OF-WAY. EXCAVATION BEYOND THE RIGHT-OF-WAY LINE IS ACOUNTED FOR IN THE BUILDING EXCAVATION. PAY LINE FOR UNCLASSIFIED STREET EXCAVATION CAN BE BEYOND THE RIGHT-OF-WAY LINE WHEN ADJACENT TO UNDEVELOPED TRACTS.

3. SAWED JOINTS SHALL BE SPACED AT 12' INTERVALS ON MORRIS AVENUE, GOODMAN AVENUE AND ARTIST WAY.

4. PROFILE GRADES SHOWN ON THE PAVING PLAN AND PROFILE SHEETS ARE TOP OF CURB AT BACK OF CURB FOR A NORMAL ROADWAY CROSS-SECTION AS INDICATED ON THE TYPICAL SECTIONS BY "PROFILE T.C.".

5. THE 1/4"/FT. CROSS-SLOPE IN SIDEWALK AREAS IS THE STANDARD CONDITION ADJACENT TO MOST LAND USES SUCH AS RESIDENTIAL AND PARK PROPERTIES. A VARIABLE SLOPE MAY BE REQUIRED AT CERTAIN LOCATIONS IN ORDER TO MATCH THE FINISHED FLOOR ELEVATION FOR BARRIER-FREE ACCESS. SEE PRIVATE GRADING PLANS FOR THESE LOCATIONS.

6. SIDEWALK TYPICAL SECTIONS VARY ALONG EACH STREET AND FROM STREET TO STREET. THERE ARE SOME ENHANCED SIDEWALK SECTIONS AT TRASH LOCATIONS. SEE PAVING PLANS FOR LOCATIONS AND DETAILS.

JOINT LEGEND:

(1) - SAWED LONGITUDINAL DUMMY JOINT

(2) - CONSTRUCTION JOINT (FULL WIDTH PVM'T. IS ALLOWED WHERE APPROVED BY THE TOWN OF ADDISON). FULL WIDTH PAVEMENT REQUIRES A SAWED LONGITUDINAL JOINT AT THE CENTERLINE OF THE PAVEMENT.

(3) - ISOLATION JOINT

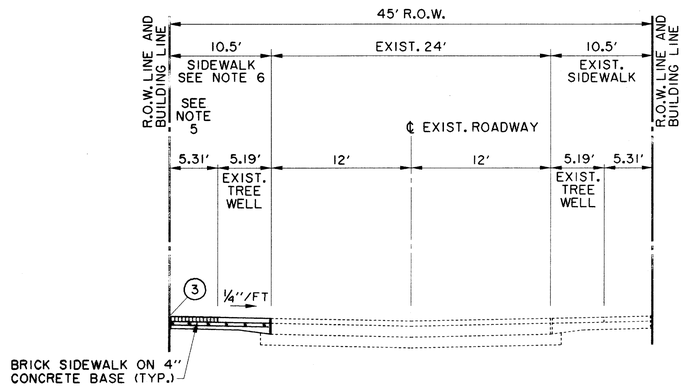

2 LANES UNDIVIDED
PASHCAL PLACE (LOOKING NORTH)

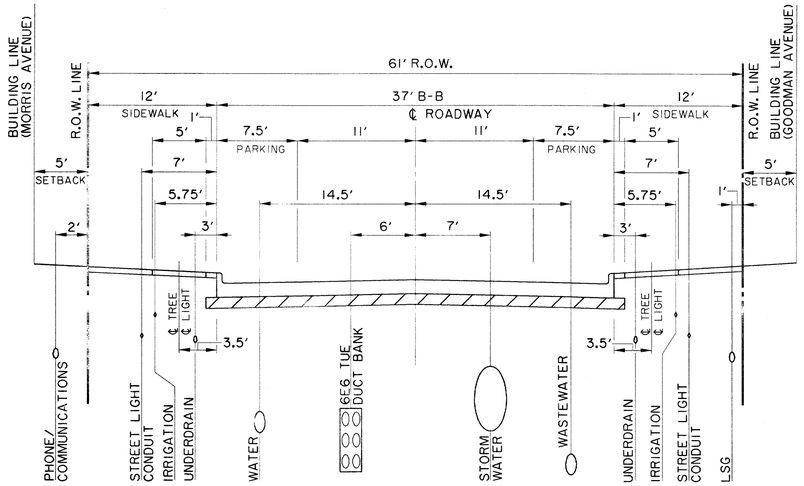

MORRIS AVENUE & GOODMAN AVENUE
(LOOKING EAST)

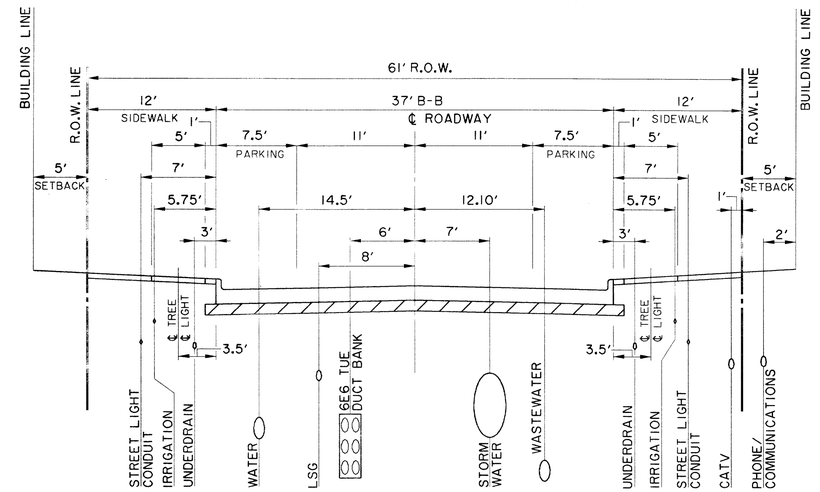

ARTIST WAY
(LOOKING NORTH)

NOTE:

THE PRECISE FINAL LOCATIONS OF ALL UTILITIES ARE ESTABLISHED IN PLAN VIEW. LOCATIONS ON THIS PLAN ARE GIVEN AS A GUIDE AND TO INDICATE ALLOCATION OF SPACE.

RECORD DRAWING

BENCHMARKS:

BM#5
"□" CUT ON 8' INLET ON NORTH CURB LINE OF GOODMAN AVE. ±75' EAST OF PASCHAL PLACE.
ELEV. 629.98

BM#6
"□" CUT AT ℄ OF 8' INLET AT THE SOUTHWEST CORNER OF MORRIS AVE. AND WITT PLACE.
ELEV. 627.29

BM#7
"□" CUT AT WEST CORNER OF ADDISON THEATRE CENTRE PARKING LOT, SECOND ENTRANCE NORTH OF ADDISON RD.
ELEV. 637.66

THE SEAL APPEARING ON THIS DOCUMENT WAS AUTHORIZED BY DAVID E. MEYERS, P.E. 81512

STATE OF TEXAS · DAVID E. MEYERS · 81512 · REGISTERED PROFESSIONAL ENGINEER
12/18/00

DATE	DESCRIPTION	REF NO.
6/23/99	ISSUED FOR CONSTRUCTION	N/A
5/17/99	ISSUED FOR BID	N/A

PAVING TYPICAL SECTIONS & RECOMMENDED UTILITY LOCATIONS
ADDISON CIRCLE
PHASE II-B PUBLIC INFRASTRUCTURE
TOWN OF ADDISON, TEXAS

Huitt - Zollars, Inc.
3131 Mckinney Ave., Suite 600, Dallas, TX 75204
Phone (214) 871-3311/Fax (214) 871-0757

DESIGN	DRAWN	APPR.	SCALE	DATE	PROJECT NO.	NO.
HZI	HZI	DEM	N.T.S.	MAR. 99	01-1822-50	P3

B:\AUC3SEC.DGN 2,4,5,8,13,18,20,23-29,32-34,37-39,43-52,55-61
PRF 1822150#0,0,000000
F:\LISP\MILLER.TBL
N:\proj\01182250\dgn\AUC3SEC.DGN
F:\DGN\ADDISON\ACTIVE\ADDN\AUC3SEC.PRF
Huitt-Zollars, Inc.
no ref logos!, no ref name, no ref texas

N:\proj\01182250\dgn\AUC3SEC.DGN

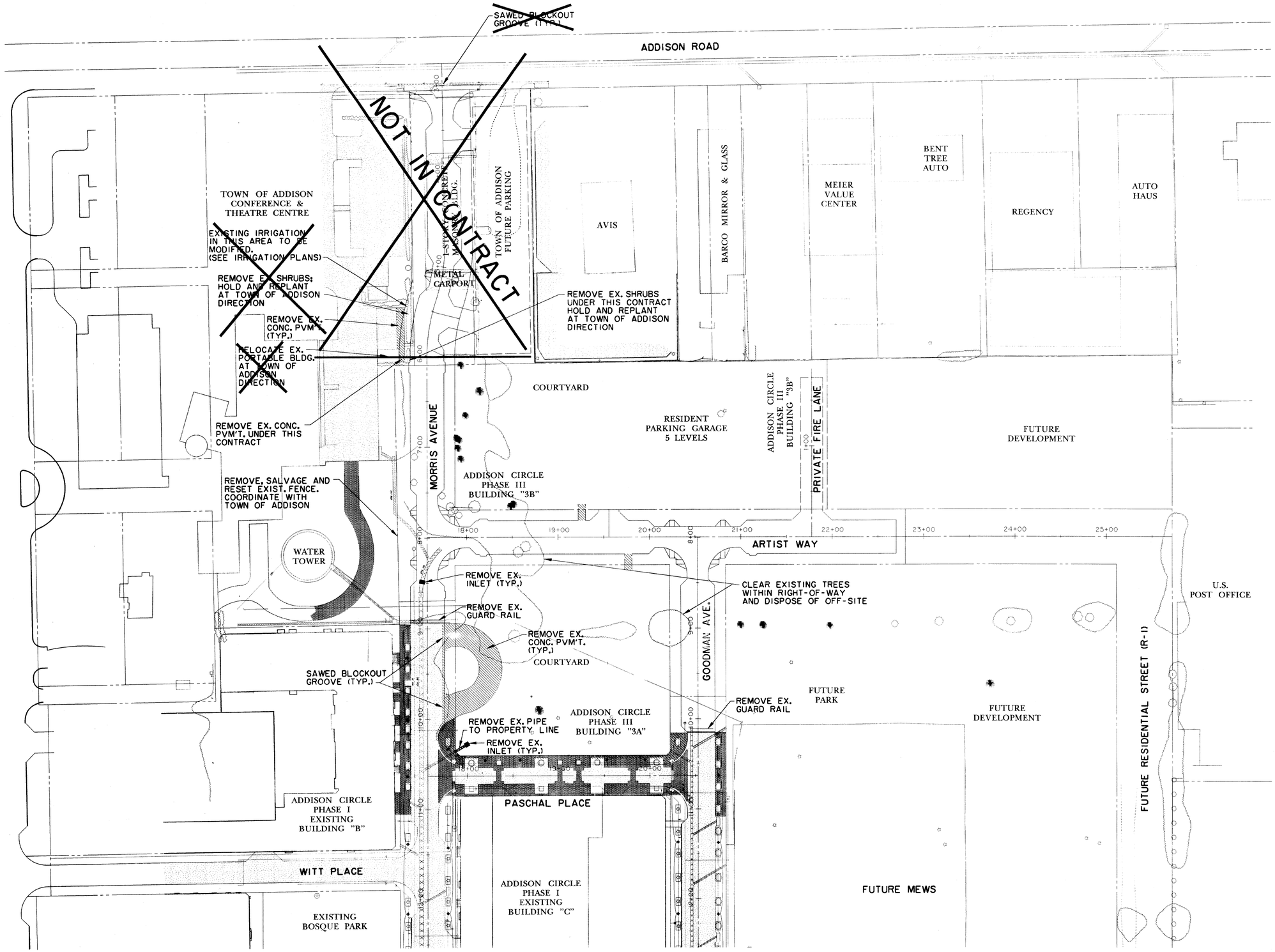

N

0 25 50 75 100
SCALE IN FEET

THIS PLAN ILLUSTRATES THE TOTAL AREA OF EXISTING PAVEMENT AND THE LOCATIONS OF EXISTING STROM DRAINAGE FACILITIES TO BE REMOVED. THESE ELEMENTS WILL REQUIRE RREMOVAL INCREMENTALLY AS NECESSARY FOR PROPER STAGING AND SEQUENCING OF CONSTRUCTION AND MAY THERFORE REQUIRE ADDITIONAL SAW CUTTING THAN WHAT IS INDICATED.

LEGEND

- CONCRETE REMOVAL
- XXXXX PIPE REMOVAL
- INLET REMOVAL

RECORD DRAWING

THE SEAL APPEARING ON THIS DOCUMENT WAS AUTHORIZED BY DAVID E. MEYERS, P.E. 81512

STATE OF TEXAS
DAVID E. MEYERS
81512
REGISTERED PROFESSIONAL ENGINEER
12/18/00

DATE	DESCRIPTION	REF NO.
6/23/99	ISSUED FOR CONSTRUCTION	N/A
5/17/99	ISSUED FOR BID	N/A

DEMOLITION PLAN

ADDISON CIRCLE

PHASE II-B PUBLIC INFRASTRUCTURE

TOWN OF ADDISON, TEXAS

Huitt - Zollars, Inc.
3131 Mckinney Ave., Suite 600, Dallas, TX 75204
Phone (214) 871-3311/Fax (214) 871-0757

DESIGN	DRAWN	APPR.	SCALE	DATE	PROJECT NO.	NO.
HZI	HZI	DEM	1"=50'	MAR. 99	01-1822-50	P4

h:\proj\01182250\dgn\AUC3DEMO.DGN

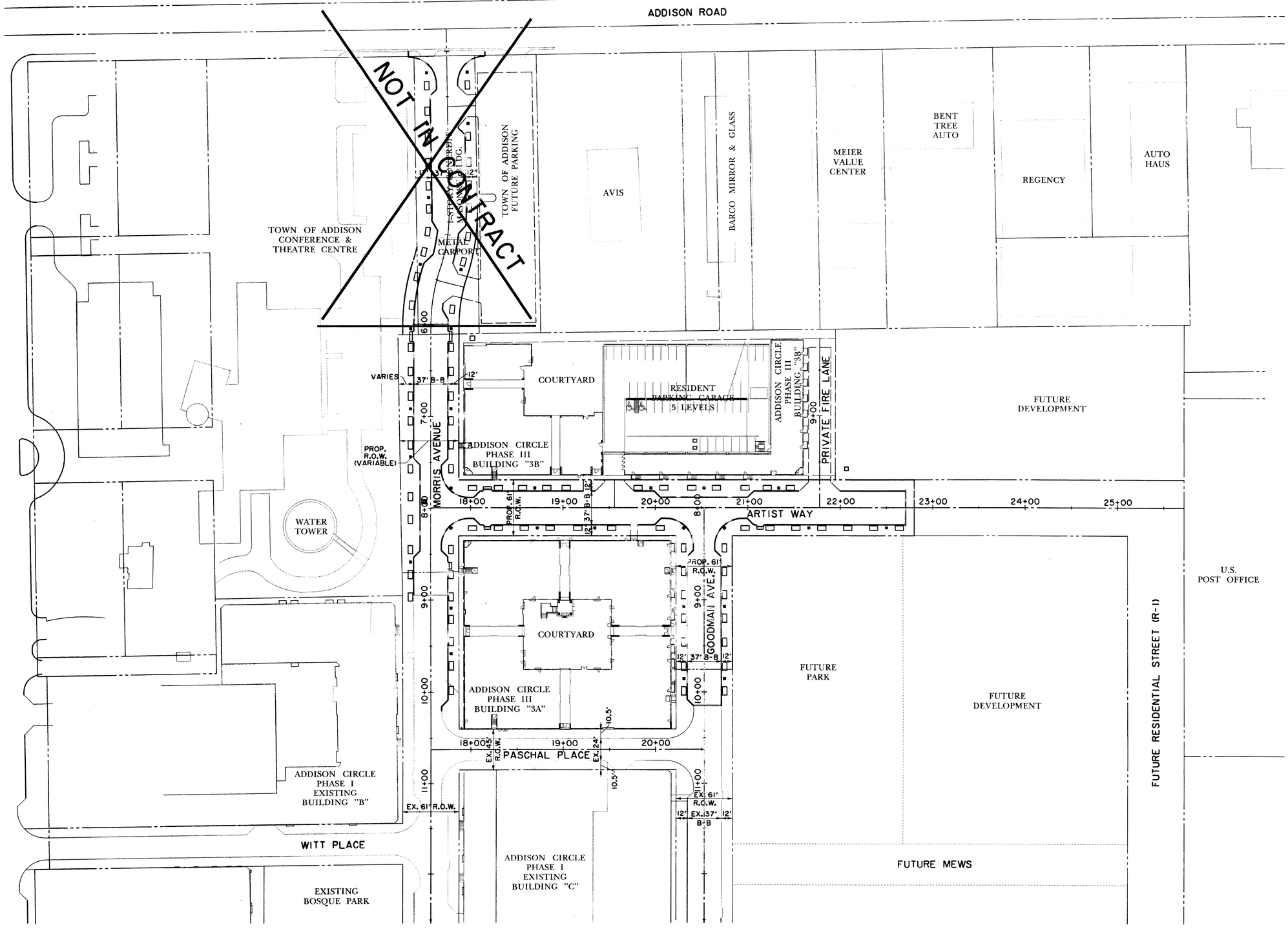

RECORD DRAWING

THE SEAL APPEARING ON THIS DOCUMENT WAS AUTHORIZED BY DAVID E. MEYERS, P.E. 81512

STATE OF TEXAS · DAVID E. MEYERS · 81512 · REGISTERED PROFESSIONAL ENGINEER · 12/18/00

LEGEND:
- EXIST. CURB
- PROP. CURB
- FUTURE CURB

DATE	DESCRIPTION	REF NO.
6/23/99	ISSUED FOR CONSTRUCTION	N/A
5/17/99	ISSUED FOR BID	N/A

PAVING & STREETSCAPE SITE PLAN

ADDISON CIRCLE

PHASE II-B PUBLIC INFRASTRUCTURE

TOWN OF ADDISON, TEXAS

Huitt - Zollars, Inc.
3131 Mckinney Ave., Suite 600, Dallas, TX 75204
Phone (214) 871-3311/Fax (214) 871-0757

DESIGN	DRAWN	APPR.	SCALE	DATE	PROJECT NO.	NO.
HZI	HZI	DEM	1"=50'	MAR. 99	01-1822-50	P5

h:\proj\01182250\dgn\AUC3SP02.DGN

T:\AUCSITE\DGN\...
U:\AUCSITE.DGN
T:\AUCSITE\DGN\...
P:\AUC3BASE.DGN, 1-5,12,7,18,20,23,27,28,34,36,39,44,45,49
B:\AUC3BLDGS.DGN, 5,13-20,50,56,59-61
PRF:ROTATIONS.PRF
F:\ZOLLER.TBL
h:\proj\01182250\dgn\AUC3SP02.DGN
F:\Dbe - B 15:17:21 3/30/00
F:\dgn\AUC3SP02.DGN
Huitt-Zollars, Inc.
no ref tags, *no ref names*, *no ref levels*

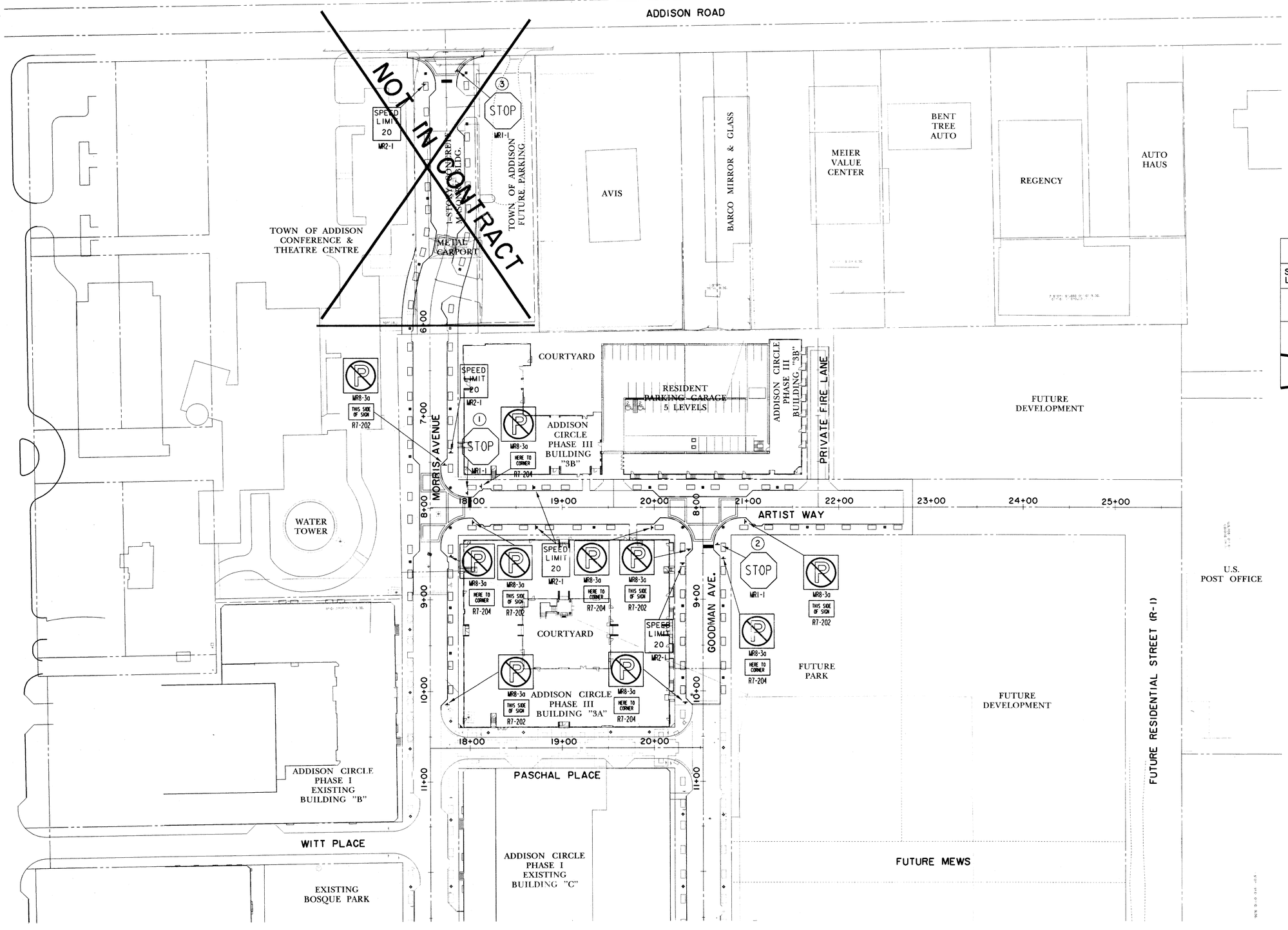

N

0 25 50 75 100
SCALE IN FEET

NOTES:

1. ALL TRAFFIC SIGN DESIGN, FABRICATION AND PLACEMENT SHALL CONFORM TO THE LATEST ISSUE OF THE "TEXAS MANUAL ON UNIFORM TRAFFIC CONTROL DEVICES FOR STREETS AND HIGHWAYS".
2. STREET NAME SIGNS ARE TO BE MOUNTED PER TABLE ON THIS DRAWING.
3. PRIOR TO FINAL INSTALLATION OF SIGNS, CONTRACTOR SHALL REVIEW PLACEMENT WITH THE DIRECTOR OF PUBLIC WORKS TO ENSURE PROPER VISIBILITY RELATIVE TO COMPLETION OF OTHER IMPROVEMENTS.

STREET NAME SIGNS			
SIGN NO./ LOCATION	STREET NAME	BLOCK NO.	MOUNTING
1	MORRIS AVE.	4900	NEW SIGN POLE
	ARTIST WAY	15700	
2	GOODMAN AVE.	4900	NEW SIGN POLE
	ARTIST WAY	15700	
~~NOT IN CONTRACT~~	~~MORRIS AVE.~~	~~4900~~	~~NEW SIGN POLE~~
	~~ADDISON RD.~~		

RECORD DRAWING

BENCHMARKS:

BM#5
"□" CUT ON 8' INLET ON NORTH CURB LINE OF GOODMAN AVE. ±75' EAST OF PASCHAL PLACE. ELEV. 629.98

BM#6
"□" CUT AT ℄ OF 8' INLET AT THE SOUTHWEST CORNER OF MORRIS AVE. AND WITT PLACE. ELEV. 627.29

BM#7
"□" CUT AT WEST CORNER OF ADDISON THEATRE CENTRE PARKING LOT, SECOND ENTRANCE NORTH OF ADDISON RD. ELEV. 637.66

THE SEAL APPEARING ON THIS DOCUMENT WAS AUTHORIZED BY DAVID E. MEYERS, P.E. 81512

STATE OF TEXAS
DAVID E. MEYERS
81512
REGISTERED
PROFESSIONAL ENGINEER
12/18/00

DATE	DESCRIPTION	REF NO.
6/23/99	ISSUED FOR CONSTRUCTION	N/A
5/17/99	ISSUED FOR BID	N/A

SIGNAGE AND STRIPING PLAN

ADDISON CIRCLE

PHASE II-B PUBLIC INFRASTRUCTURE

TOWN OF ADDISON, TEXAS

Hiatt - Zollars, Inc.
3131 Mckinney Ave., Suite 600, Dallas, TX 75204
Phone (214) 871-3311/Fax (214) 871-0757

DESIGN	DRAWN	APPR.	SCALE	DATE	PROJECT NO.	NO.
HZI	HZI	DEM	1"=50'	MAR. 99	01-1822-50	P6

h:\proj\01182250\dgn\AUC3SM04.DGN

T:\AUC3TOPO.DGN; I:\R-R\15-34,35-45,47-82
U:\AUC3UTIL.DGN, 83
PW:\AUC3BASE.DGN; 1,5,10-12,8,20,49
B:\AUC3BLDGN; 2,5,13,20,50,56,59-61
no ref logical, no ref name*, no ref levels
PW:\01181000\d0000000
FY:\NWALLER.TBL
R:\proj\01182250\dgn\AUC3SM04.DGN
Fr: Dec. 8 13:21:21 2000
To: Dec. 8 13:21:21 2000
Plotted by: NWALLER on HZI1TINO-4004N.AUC3SM04.PRF
Hiatt-Zollars, Inc.

NOT IN CONTRACT

AVIS

TOWN OF ADDISON
FUTURE PARKING

ADDISON CIRCLE
PHASE III
BUILDING "3B"

ADDISON ROAD

MORRIS AVE.

CONSTRUCT STREET HEADER

MATCH LINE STA. 7+00

2+98.20 CONNECT TO EXIST ASPHALT

3+05.92 CONSTRUCT STREET HEADER

3+05.97 BEGIN DROP SLAB

3+26.07 END DROP SLAB

3+30.91 CR

3+41.69 ℄ BARRIER FREE RAMP

3+84.63 BEGIN TRANSITION

STREET LIGHT BASE (TYP.)

4" CONC. SIDEWALK SUB-BASE (TYP.)

6" MONOLITHIC CONC. CURB (TYP.)

EXPANSION JOINT AT CR (TYP.)

SAWED BREAKOUT GROOVE

30' R

T.P. 636.06

T.P. 636.06

T.P. 637.66

T.P. 637.27

4+00

23' B-B

37' B-B

61' R.O.W.

17'

BARRIER FREE RAMP (TYP.)

5+00.83

T.P. 635.98

T.P. 635.60

T.P. 635.08

T.P. 634.70

5.0%

5.0%

24'

12'

2.1%

2.2%

P.C. 4+71.51

4+97.86 END TRANSITION

5+04.95 BEGIN DROP SLAB

5+20.96 END DROP SLAB

P.R.C. 5+37.85

5+81.98 BEGIN TRANSITION

P.T. 6+00.98

BEGIN CONSTRUCT STREET HEADER

CURVE DATA
Δ=18°05'09"
R=200.00'
T=63.13'
L=31.83'
CD=62.87'

PAV. STA. 6+11.25, 20.5' LT.
℄ 10' MOD. REC. INLET
(EXTRA DEPTH)
W/ BRICK TOP
T.C. 634.79
F.L. 628.79

R.O.W. LINE (TYP.)

6+00

6" REINF. CONC. PVMT. ON 6" LIME STAB. SUBGRADE

30.5'

12'

37' B-B

VARIES

6" MONOLITHIC CONC. CURB (TYP.)

STA. 5+50.81
℄ 6" REINF. CONC. DRIVE

5'X9' LEAVEOUT FOR TREE PIT (TYP.)

STA. 3+60.71
℄ 6" REINF. CONC. DRIVE

3+41.62 BEGIN TRANSITION

6" REINF. CONC. DROP SLAB ON 6" LIME STAB. SUBGRADE BRICK PAVERS (TYP.)

CONSTRUCT ASPHALT TRANSITION W/6" HMACP BASE COURSE AND 2" HMACP SURFACE COURSE

STA. 2+75.00 MORRIS AVE. =
STA. XX+XX.XX ADDISON RD.

CURVE DATA
Δ=19°00'22"
R=200.00'
T=66.34'
L=33.48'
CD=66.04'

4+27.86 END TRANSITION

4+24.39 BEGIN TRANSITION

INSTALL 40 LF STREET BARRICADE

SEE DEMOLITION PLAN FOR REMOVAL LIMITS IN THIS AREA

No sidewalk installed in this area

B P14

4" CONC. SIDEWALK SUB-BASE & BRICK PAVERS (TYP.)

PAV. STA. 6+11.25, 20.5' RT.
℄ 10' MOD. REC. INLET
(EXTRA DEPTH)
W/ BRICK TOP
T.C. 634.79
F.L. 628.79

Bricks, Lights Trees, Landscaping not installed on South side of Morris

A P14

N

0 10 20 30 40
SCALE IN FEET

RECORD DRAWING

TOWN OF ADDISON
CONFERENCE AND THEATRE CENTRE

NOT IN CONTRACT

60' VC
m=0.30

60' VC
m=0.26

60' VC
m=0.19

170' VC
m=-1.18

PROP. LT. T.C.

PROP. RT. T.C.

EX. GROUND AT LT. R.O.W.

EX. GROUND AT RT. R.O.W.

5.00%

1.00%

-1.60%

0.90%

PVC 3+05.92

PVT 3+10

PVI 3+40

PVT 3+70

PVI 4+50
No V.C.

PVC 5+70

PVI 6+00

6+11.25
SAG

PVT 6+30

PVC 6+40

6+69.35
CREST

T.C. 639.80
T.C. 639.60
T.C. 639.40
T.C. 638.40
(638.10)
T.C. 638.13
T.C. 638.36
(638.10)
T.C. 638.11
T.C. 637.80
T.C. 637.50
T.C. 637.00
T.C. 636.20
T.C. 635.40
T.C. 635.08
T.C. 634.79
(634.60)
T.C. 634.89
T.C. 634.98
T.C. 635.05
T.C. 635.12
T.C. 634.97

645
640
635
630

3 4 5 6 7

6+00.98
BEGIN CONSTRUCTION

MATCH LINE STA. 7+00

BENCHMARKS:

BM#5
"□" CUT ON 8' INLET ON NORTH CURB LINE OF GOODMAN AVE. ±75' EAST OF PASCHAL PLACE.
ELEV. 629.98

BM#6
"□" CUT AT ℄ OF 8' INLET AT THE SOUTHWEST CORNER OF MORRIS AVE. AND WITT PLACE.
ELEV. 627.29

BM#7
"□" CUT AT WEST CORNER OF ADDISON THEATRE CENTRE PARKING LOT, SECOND ENTRANCE NORTH OF ADDISON RD.
ELEV. 637.66

THE SEAL APPEARING ON THIS DOCUMENT WAS AUTHORIZED BY DAVID E. MEYERS, P.E. 81512

STATE OF TEXAS
DAVID E. MEYERS
81512
REGISTERED PROFESSIONAL ENGINEER
12/13/00

DATE	DESCRIPTION	REF NO.
6/23/99	ISSUED FOR CONSTRUCTION	N/A
5/17/99	ISSUED FOR BID	N/A

PAVING PLAN & PROFILE
MORRIS AVE. 6+00.98 TO 7+00.00

ADDISON CIRCLE
PHASE II-B PUBLIC INFRASTRUCTURE

TOWN OF ADDISON, TEXAS

Huitt - Zollars, Inc.
3131 Mckinney Ave., Suite 600, Dallas, TX 75204
Phone (214) 871-3311/Fax (214) 871-0757

DESIGN	DRAWN	APPR.	SCALE	DATE	PROJECT NO.	NO.
HZI	HZI	DEM	H: 1"=20' V: 1"=6'	MAR. 99	01-1822-50	P7

h:\proj\01182250\dgn\AUC3PV01.DGN

B: AUC3BOLDON; 2-5,8,13,820,23-39,42-53,55-61,63
FI: AUC3BASE.DGN; 1-8,8-18,820-24,26-28,31-34,36,40-42,44-50,56-61
FT: AUC3TEXT.DGN; 1-2,4-34,36-40,42-45,47-53,55-62
LI: AUC3LITE.DGN; 1-83
TZ: AUC3CONT.DGN; 11,15,28

PRF: 80511.0H+00.820000
FI: h:\MILLER\TR.

no ref logical-, no ref name-, no ref levels-
no ref logical-, no ref name-, no ref levels-
no ref logical-, no ref name-, no ref levels-
no ref logical-, no ref name-, no ref levels-
no ref logical-, no ref name-, no ref levels-
no ref logical-, no ref name-, no ref levels-

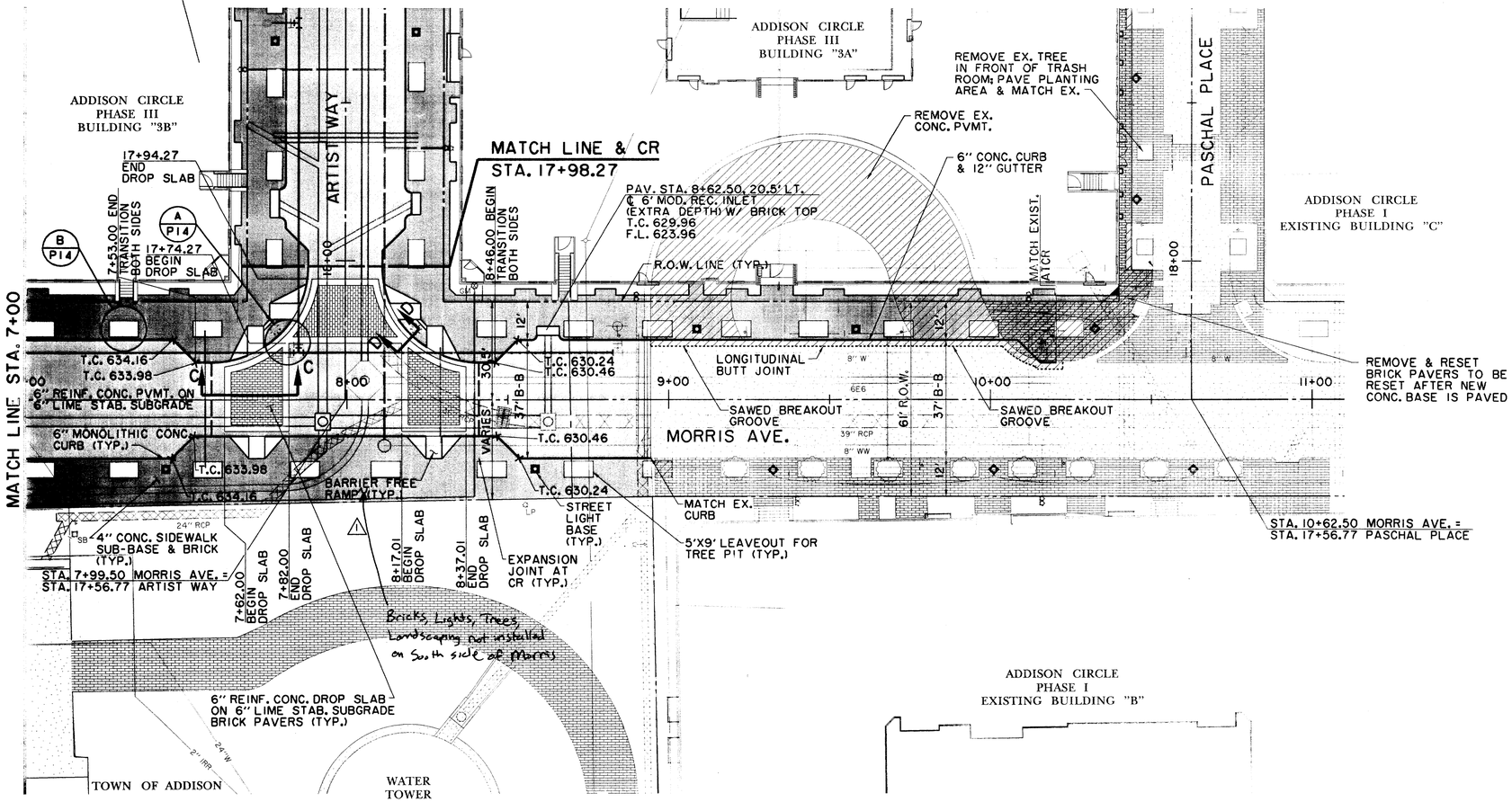

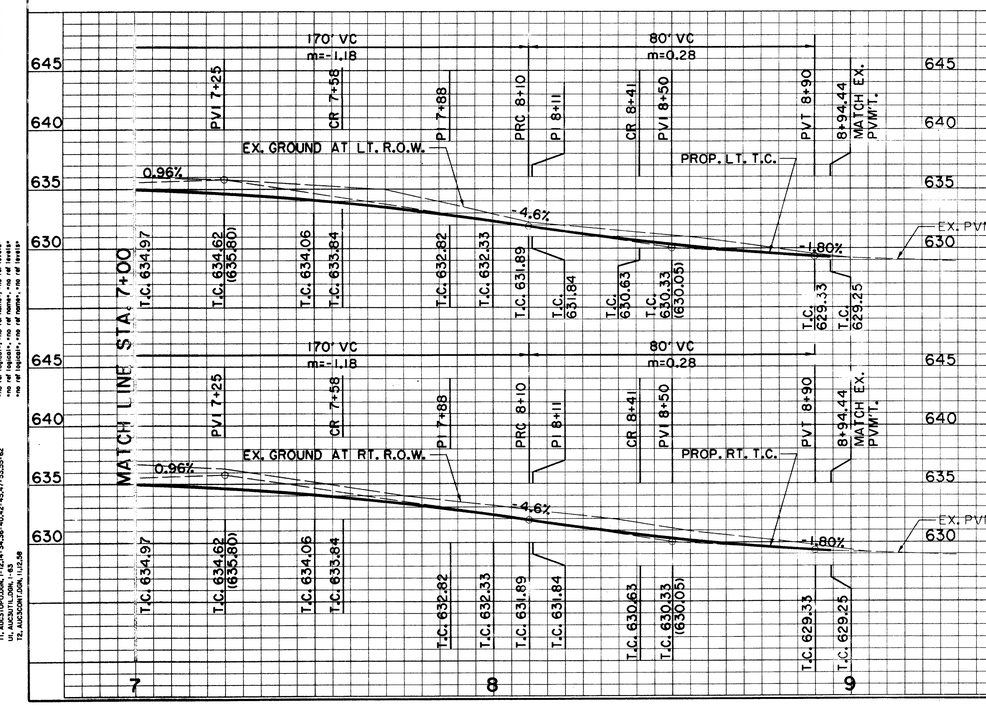

RECORD
DRAWING

BENCHMARKS:

BM#5
"□" CUT ON 8' INLET ON NORTH CURB LINE OF GOODMAN AVE. ±75' EAST OF PASCHAL PLACE.
ELEV. 629.98

BM#6
"□" CUT AT ℄ OF 8' INLET AT THE SOUTHWEST CORNER OF MORRIS AVE. AND WITT PLACE.
ELEV. 627.29

BM#7
"□" CUT AT WEST CORNER OF ADDISON THEATRE CENTRE PARKING LOT, SECOND ENTRANCE NORTH OF ADDISON RD.
ELEV. 637.66

THE SEAL APPEARING ON THIS DOCUMENT WAS AUTHORIZED BY DAVID E. MEYERS, P.E. 81512

STATE OF TEXAS
DAVID E. MEYERS
81512
REGISTERED
PROFESSIONAL ENGINEER
12/13/00

DATE	DESCRIPTION	REF NO.
8/12/99	TREE DELETION (8½"x11")	SALAM
6/23/99	ISSUED FOR CONSTRUCTION	N/A
6/2/99	ADDENDUM #1	1
5/17/99	ISSUED FOR BID	N/A

PAVING PLAN & PROFILE
MORRIS AVE. 7+00.00 TO 8+XX.XX
ADDISON CIRCLE
PHASE II-B PUBLIC INFRASTRUCTURE
TOWN OF ADDISON, TEXAS

Huitt - Zollars, Inc.
3131 Mckinney Ave., Suite 600, Dallas, TX 75204
Phone (214) 871-3311/Fax (214) 871-0757

DESIGN	DRAWN	APPR.	SCALE	DATE	PROJECT NO.	NO.
HZI	HZI	DEM	H: 1"=20' V: 1"=6'	MAR. 99	01-1822-50	P8

h:\proj\01182250\dgn\AUC3PV02.DGN

PRF 80161(09)90-820000
F:\HB\MILLER.TBL
h:\proj\01182250\dgn\AUC3PV02.DGN
Fri Dec 8 15:25:53 2000
F:\HB\MILLER.TBL
Huitt-Zollars, Inc.
B. AUC3BRIDGE.DGN, 1-3,8,13,16,20,23-29,32-39,43-53,57-61,63
Pl. AUC3BASE.DGN, 1-11,13-16,18,20-24,26-28,31-34,39,40,42-50,56-61
Pr. AUC3PV02.DGN, 1-11,13-34,39-48,40,42-45,47-50,53-62
Ut. AUC3UTIL.DGN, 1-63
TZ. AUC3CONT.DGN, 1,12,26
no ref topoh, no ref none, no ref levels
no ref topoh, no ref none, no ref levels
no ref topoh, no ref none, no ref levels
no ref topoh, no ref none, no ref levels
no ref topoh, no ref none, no ref levels

MORRIS AVE.

7+00

ADDISON CIRCLE PHASE III BUILDING "3B"

PAV. STA. 18+18.27, 20.50' LT.
℄ 6' MOD. REC. INLET
WITH BRICK TOP
T.C. 633.55
F.L. 629.55

PAV. STA. 19+26.20, 18.50' LT.
CURB CUT FOR TRASH PICK-UP

18+03.27 BEGIN TRANSITION

STREET LIGHT BASE (TYP.)

6" CONC. SIDEWALK SUB-BASE & BRICK PAVERS

R.O.W. LINE (TYP.)

22'

T.C. 637.94
T.C. 637.86

20+15.27 BEGIN DROP SLAB

20+35.27 END DROP SLAB

BARRIER FREE RAMP (TYP.)

20+70.27 BEGIN DROP SLAB

20+90.27 END DROP SLAB

20+99.27 BEGIN TRANSITION

5'X9' LEAVEOUT FOR TREE PIT (TYP.)

EXPANSION JOINT AT CR (TYP.)

T.P. 640.10
T.P. 639.90

FUTURE DEVELOPMENT

PRIVATE FIRE LANE

24'

T.P. 640.10

T.P. 639.90

T.P. 636.90

T.P. 636.84

T.C. 639.10

T.C. 639.02

T.P. 639.29

T.P. 639.57

40 L.F. BARRICADE

18+00

19+00

20+00

21+00

22+00

37'B-B

61' R.O.W.

8.00

6" REINF. CONC. PVMT. ON 6" LIME STAB. SUBGRADE

ARTIST WAY

4" CONC. SIDEWALK SUB-BASE & BRICK PAVERS (TYP.)

6" MONOLITHIC CONC. CURB (TYP.)

B P14

A P14

T.C. 637.86
T.C. 637.94

PAV. STA. 18+18.27, 20.50' RT.
℄ 6' MOD. REC. INLET (EXTRA DEPTH)
WITH BRICK TOP
T.C. 633.55
F.L. 627.55

STA. 19+55.79
℄ 6" REINF. CONC. DRIVE
SUB-BASE & BRICK

6" CONC. SIDEWALK SUB-BASE & BRICK PAVERS

PAV. STA. 19+76.90, 18.50' RT.
CURB CUT FOR TRASH PICK-UP

6" REINF. CONC. DROP SLAB ON 6" LIME STAB. SUBGRADE BRICK PAVERS

PAV. STA. 21+13.27, 20.50' RT.
℄ 6' MOD. REC. INLET (EXTRA DEPTH)
WITH BRICK TOP
T.C. 639.18
F.L. 633.68

STA. 21+77.65
℄ 6" REINF. CONC.
DRIVE
SUB-BASE & BRICK

T.C. 639.10
T.C. 639.02

8+37.00 END DROP SLAB

FUTURE PARK

MATCH LINE & CR
STA. 8+41.01

STA. 20+52.77 ARTIST WAY =
STA. 7+99.50 GOODMAN AVE.

GOODMAN AVE.

STA. 22+70.00
END PVMT.
CONSTRUCT STREET HEADER

FUTURE DEVELOPMENT

MATCH LINE & CR
STA. 17+98.27

ADDISON CIRCLE PHASE III BUILDING "3A"

20+06.27 END TRANSITION

N

0 10 20 30 40
SCALE IN FEET

RECORD DRAWING

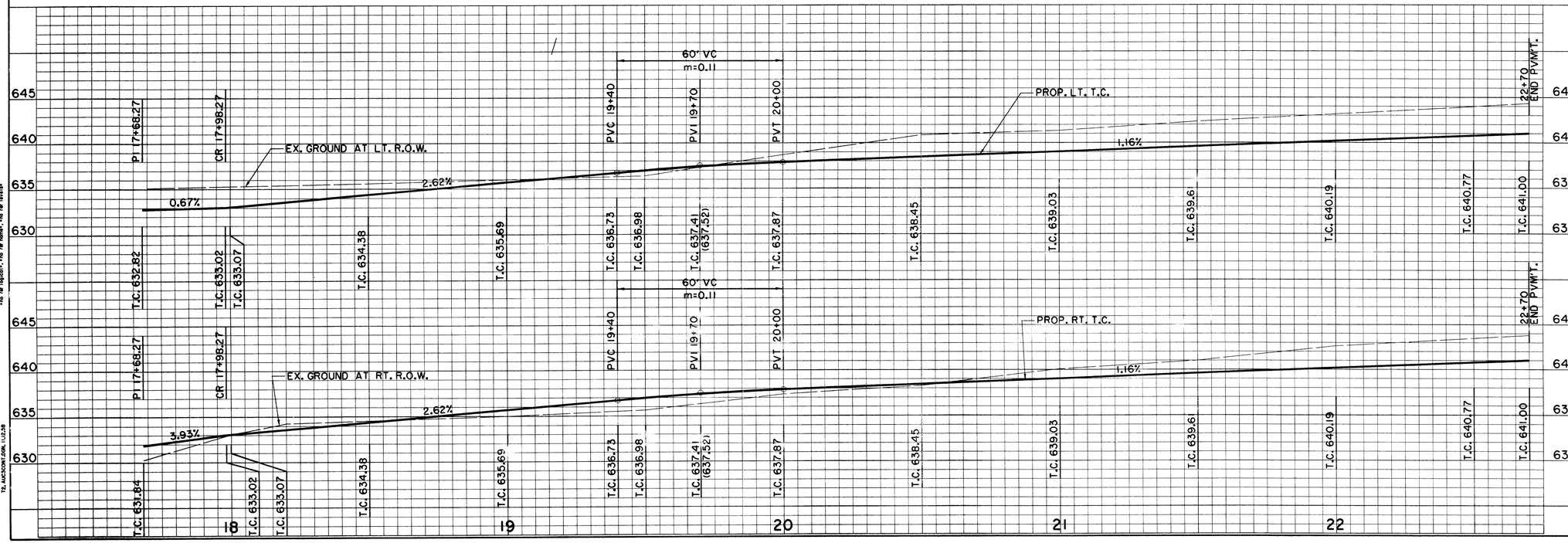

BENCHMARKS:

BM#5
"□" CUT ON 8' INLET ON NORTH CURB LINE OF GOODMAN AVE. ±75' EAST OF PASCHAL PLACE.
ELEV. 629.98

BM#6
"□" CUT AT ℄ OF 8' INLET AT THE SOUTHWEST CORNER OF MORRIS AVE. AND WITT PLACE.
ELEV. 627.29

BM#7
"□" CUT AT WEST CORNER OF ADDISON THEATRE CENTRE PARKING LOT, SECOND ENTRANCE NORTH OF ADDISON RD.
ELEV. 637.66

THE SEAL APPEARING ON THIS DOCUMENT WAS AUTHORIZED BY DAVID E. MEYERS, P.E. 81512

STATE OF TEXAS
DAVID E. MEYERS
81512
REGISTERED PROFESSIONAL ENGINEER

DATE	DESCRIPTION	REF NO.
6/23/99	ISSUED FOR CONSTRUCTION	N/A
6/2/99	ADDENDUM #1	1
5/17/99	ISSUED FOR BID	N/A

PAVING PLAN & PROFILE
ARTIST WAY STA. 17+98.27 TO STA. 22+70.00
ADDISON CIRCLE
PHASE II-B PUBLIC INFRASTRUCTURE
TOWN OF ADDISON, TEXAS

Hurtt - Zollars, Inc.
3131 Mckinney Ave., Suite 600, Dallas, TX 75204
Phone (214) 871-3311/Fax (214) 871-0757

DESIGN	DRAWN	APPR.	SCALE	DATE	PROJECT NO.	NO.
HZI	HZI	DEM	H: 1"=20' V: 1"=6'	MAR. 99	01-1822-50	P9

h:\proj\01182250\dgn\AUC3PV03.DGN

h:\proj\01182250\dgn\AUC3PV03.DGN
Fri Dec 8 15:26:07 2000
\\HZDALLAS01\DWG\PLOTTING\400DPI\AUC3PV03.PRF
Hurtt-Zollars, Inc.

PRF ROTATION=0.000000
Fr: NONE=LAYER, No.

B, AUC3BIGDGN, 2-5,8,13,16,20,23-28,32-39,43-53,55-61,63
Pl, AUC3BASE.DGN, 1-5,7-16,18,20-24,26-28,31-34,36-40,42-45,47-53,55-61
TL, AUC3TOPO.DGN, 1-12,14-34,36-40,42-45,47-53,55-62
LS, AUC3LSCAPE.DGN, 1-6
TZ, AUC3CONT.DGN, 1,13,58

no of layer, *no of name*, *no of texts

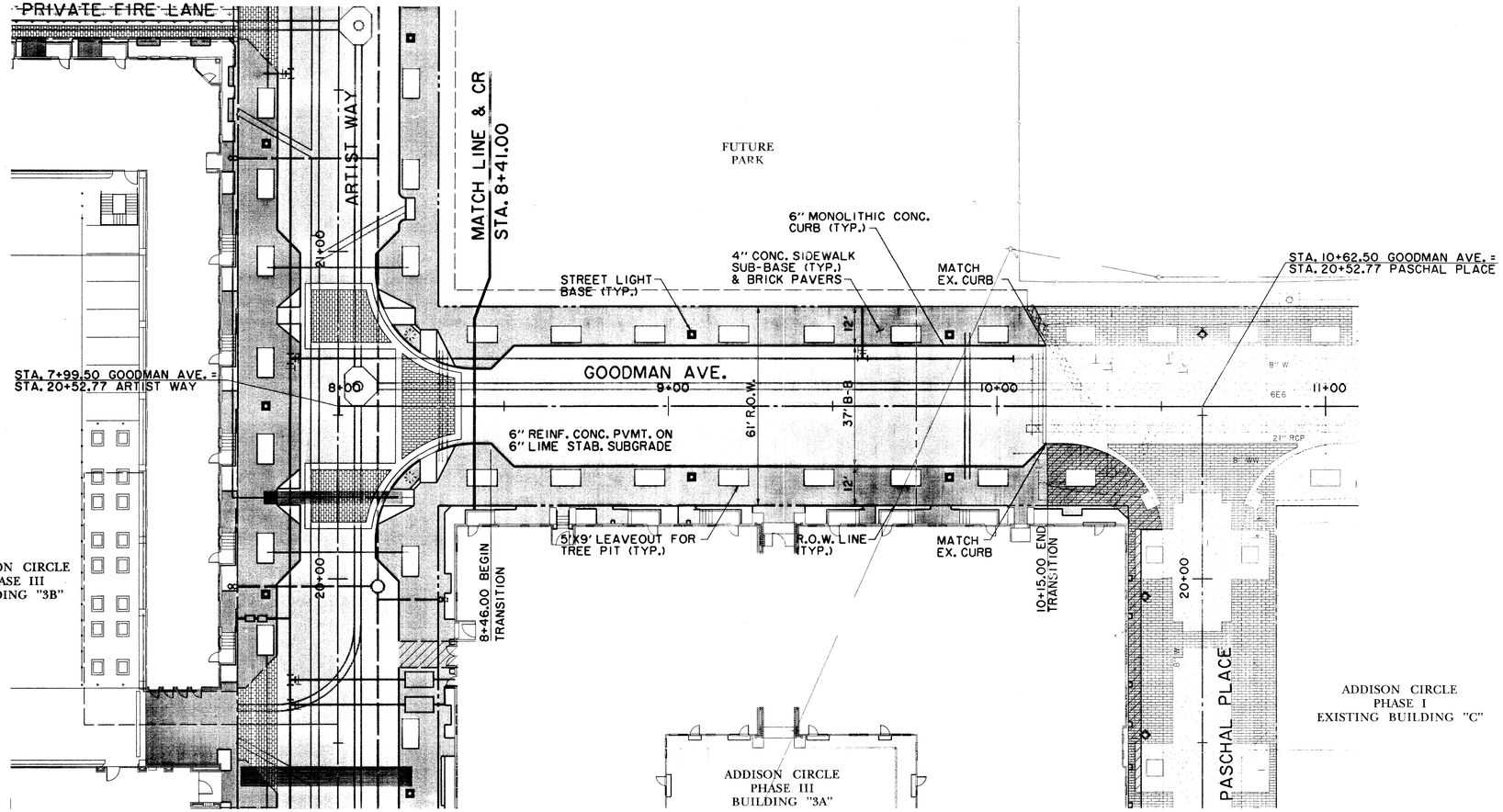

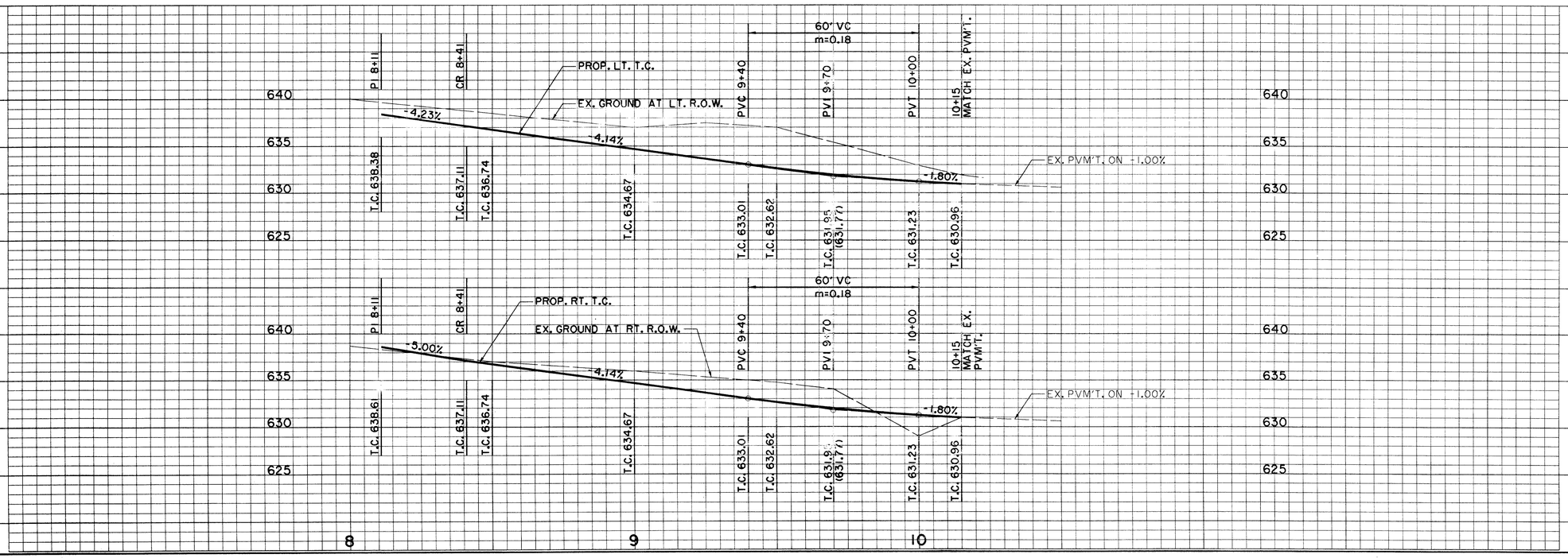

RECORD
DRAWING

BENCHMARKS:

BM#5
"□" CUT ON 8' INLET ON NORTH CURB LINE OF GOODMAN AVE. ±75' EAST OF PASCHAL PLACE. ELEV. 629.98

BM#6
"□" CUT AT ℄ OF 8' INLET AT THE SOUTHWEST CORNER OF MORRIS AVE. AND WITT PLACE. ELEV. 627.29

BM#7
"□" CUT AT WEST CORNER OF ADDISON THEATRE CENTRE PARKING LOT, SECOND ENTRANCE NORTH OF ADDISON RD. ELEV. 637.66

THE SEAL APPEARING ON THIS DOCUMENT WAS AUTHORIZED BY DAVID E. MEYERS, P.E. 81512

STATE OF TEXAS
DAVID E. MEYERS
81512
REGISTERED
PROFESSIONAL ENGINEER
12/11/09

DATE	DESCRIPTION	REF NO.
6/23/99	ISSUED FOR CONSTRUCTION	N/A
5/17/99	ISSUED FOR BID	N/A

PAVING PLAN & PROFILE
GOODMAN AVE. 8+41.00 TO 10+15.00

ADDISON CIRCLE
PHASE II-B PUBLIC INFRASTRUCTURE
TOWN OF ADDISON, TEXAS

Huitt - Zollars, Inc.
3131 Mckinney Ave., Suite 600, Dallas, TX 75204
Phone (214) 871-3311/Fax (214) 871-0757

DESIGN	DRAWN	APPR.	SCALE	DATE	PROJECT NO.	NO.
HZI	HZI	DEM	H: 1"=20' V: 1"=6'	MAR. 99	01-1822-50	P10

h:\proj\01182250\dgn\AUC3PVO4.DGN

PW ROTATION=0.000000
F:\HW\WALLER.TBL
h:\proj\01182250\dgn\AUC3PVO4.DGN
Fri Dec 18 15:26:23 2009
User:HZI, Level:1,2,3,4,5,6,7,8,9,10,11,12,13,14,15,16,17,18,19,20,21,22,23,24,25,26,27,28,29,30,31,32,33,34,35,36,37,38,39,40,41,42,43,44,45,46,47,48,49,50,51,52,53,54,55,56,57,58,59,60,61,62,63
B: AUC3BASE.DGN
Pl: AUC3BASE.DGN
Pl: AUC3PLOT10.cel
Ti: AUC3TITLE.DGN
Tl: AUC3CONTOUR.DGN
T2: AUC3CONTOUR.DGN
*no ref topic#, *no ref name, *no ref texts*

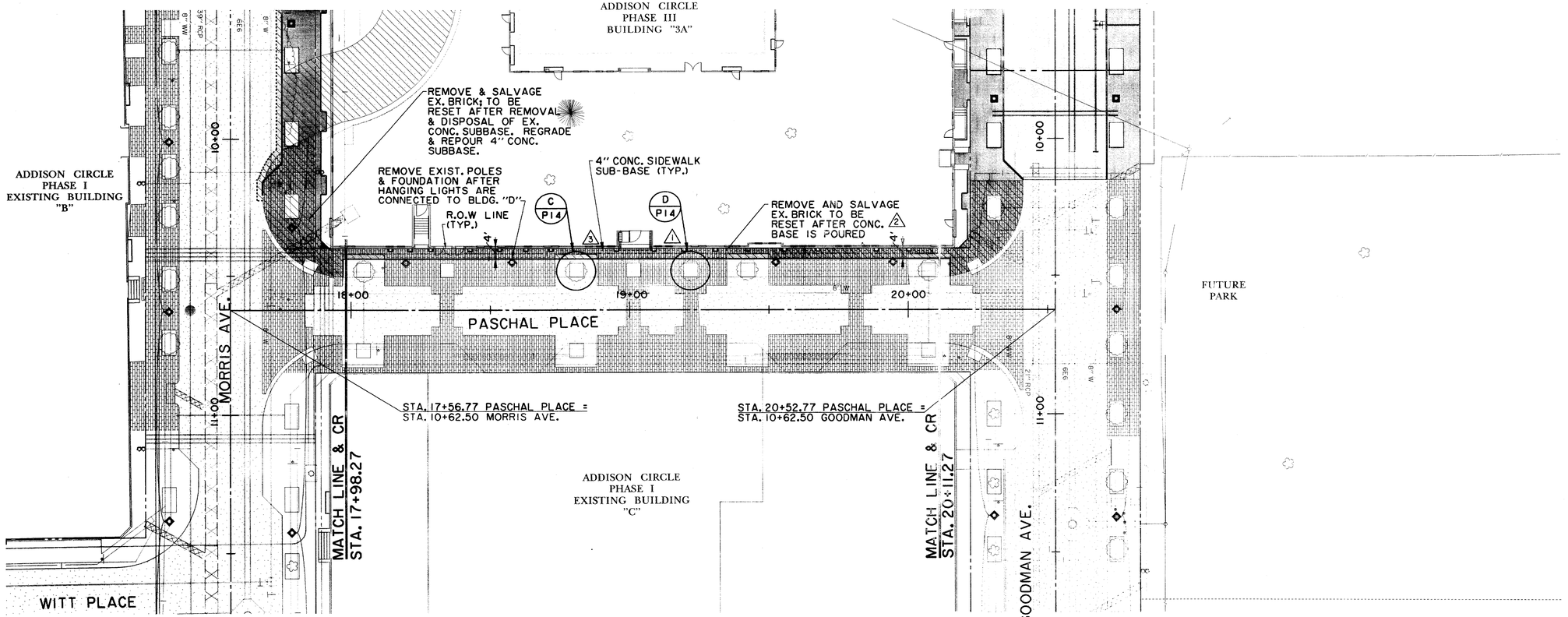

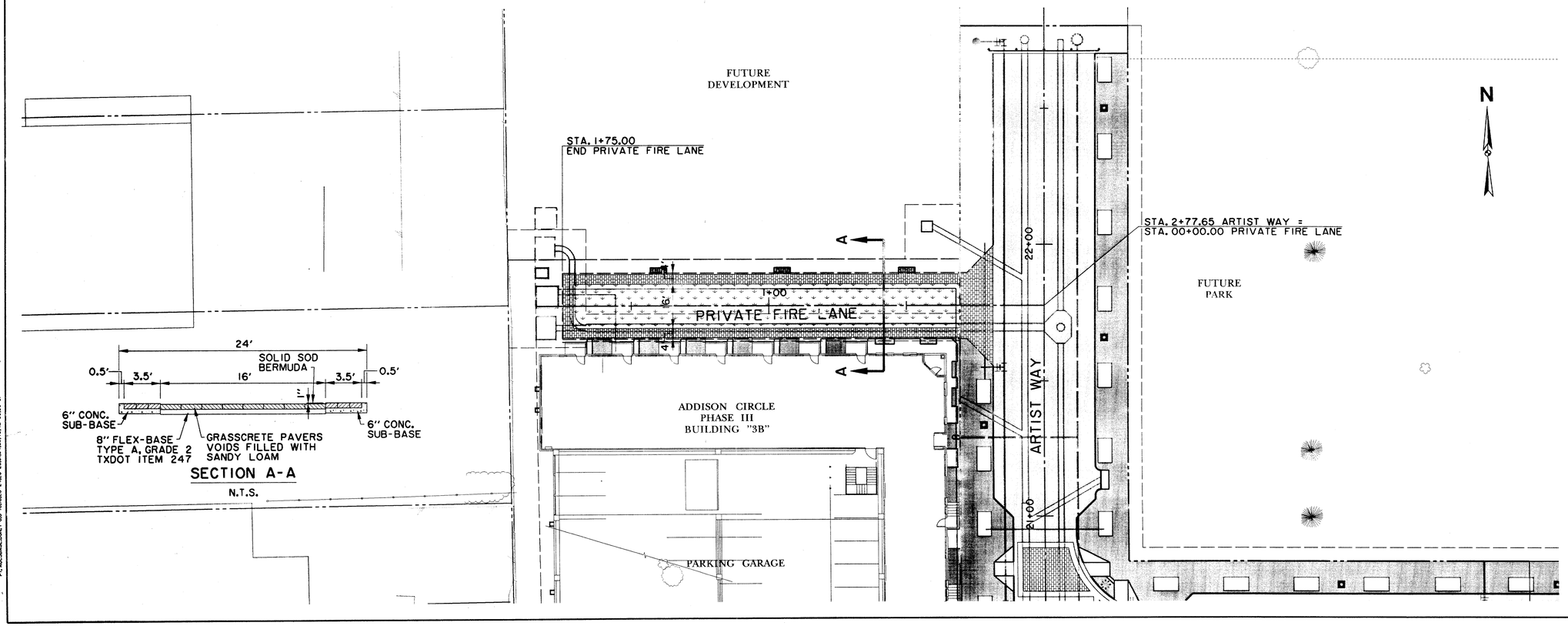

N

0 10 20 30 40
SCALE IN FEET

RECORD DRAWING

BENCHMARKS:

BM#5
"□" CUT ON 8' INLET ON NORTH CURB LINE OF GOODMAN AVE. ±75' EAST OF PASCHAL PLACE.
ELEV. 629.98

BM#6
"□" CUT AT ℄ OF 8' INLET AT THE SOUTHWEST CORNER OF MORRIS AVE. AND WITT PLACE.
ELEV. 627.29

BM#7
"□" CUT AT WEST CORNER OF ADDISON THEATRE CENTRE PARKING LOT, SECOND ENTRANCE NORTH OF ADDISON RD.
ELEV. 637.66

THE SEAL APPEARING ON THIS DOCUMENT WAS AUTHORIZED BY DAVID E. MEYERS, P.E. 81512

STATE OF TEXAS
DAVID E. MEYERS
81512
REGISTERED
PROFESSIONAL ENGINEER
12/5/00

DATE	DESCRIPTION	REF NO.
1/14/00	REVISED PASCHAL DEMOLITION LIMITS	3
11/23/99	REVISED PASCHAL DEMOLITION LIMITS	2
10/13/99	REVISED PASCHAL DEMOLITION LIMITS	1
6/23/99	ISSUED FOR CONSTRUCTION	N/A
5/17/99	ISSUED FOR BID	N/A

PAVING PLAN

PASCHAL PLACE 17+56.77 TO 20+52.77 & FIRE LANE 0+00.00 TO 1+75.00

ADDISON CIRCLE

PHASE II-B PUBLIC INFRASTRUCTURE

TOWN OF ADDISON, TEXAS

Huitt - Zollars, Inc.
3131 Mckinney Ave., Suite 600, Dallas, TX 75204
Phone (214) 871-3311/Fax (214) 871-0757

DESIGN	DRAWN	APPR.	SCALE	DATE	PROJECT NO.	NO.
HZI	HZI	DEM	H: 1"=20' V: 1"=6'	MAR. 99	01-1822-50	P11

h:\proj\01182250\dgn\AUC3PV05.DGN

h:\proj\01182250\dgn\AUC3PV05.DGN
Fri Dec. 8 13:26:30 2000
h:\proj\01182250\dgn\AUC3PV05.PRF
Huitt-Zollars, Inc.
PRF 80121DWG.000000
FIXWINKLER,TBL
TL: AUC3TOPO.DGN; 1-12;14-34;36-40;42-53;55-62
UL: AUC3UTIL.DGN; 1-63
P: AUC3BASE.DGN; 1-5;7-16;18;20-24;26-28;31;34;39;40;42-50;56-61
T: AUC3TOPO.DGN; 1-12;14-34;36-40;42-53;55-62
U: AUC3UTIL.DGN; 1-63
PL: AUC3BASE.DGN; 1-6;8-16;18;20-24;26-28;31;34;39;40;42-50;56-61

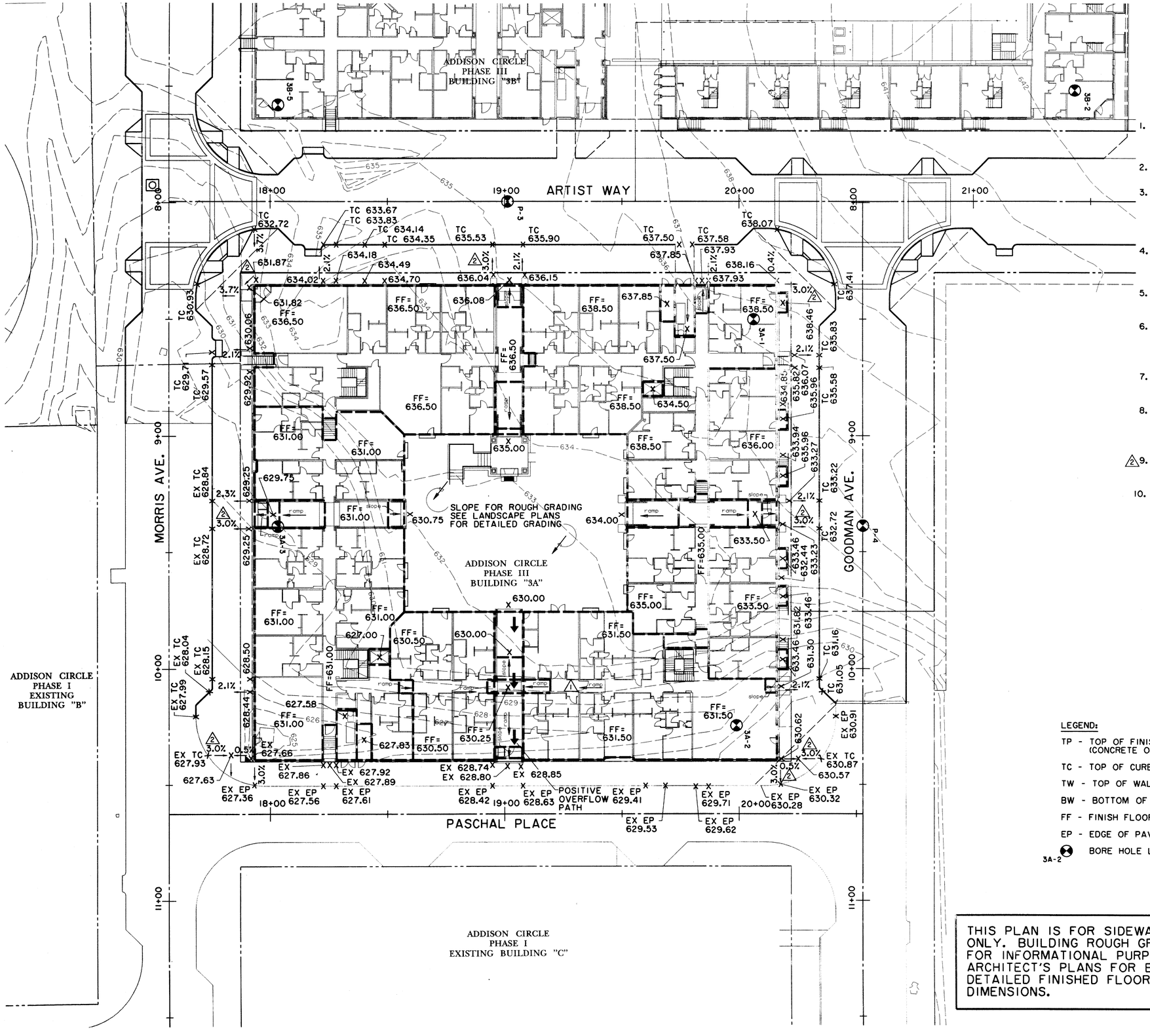

N

0 10 20 30 40
SCALE IN FEET

GRADING NOTES

1. PLAN ELEVATIONS ARE TO FINISHED BUILDING SLAB, PAVEMENT OR PLANTING AREA. ADJUSTMENTS FOR SLAB, PAVEMENT AND PLANTING BED THICKNESS MUST BE MADE FOR THE PURPOSES OF EARTHWORK. REFER TO ARCHITECTURAL AND LANDSCAPE PLANS FOR ELEMENTS NOT DETAILED IN THESE PLANS.
2. ROUGH GRADING SHALL BE ACCOMPLISHED TO WITHIN +0.10 FEET OF PLAN ELEVATION (AFTER ADJUSTMENT FOR FINISH THICKNESS).
3. ALL TRAFFIC CONTROL NECESSARY FOR THE WORK SHALL BE PROVIDED BY THE AFFECTED CONTRACTOR. ALL BARRICADES, WARNING SIGNS, LIGHTS, DEVICES, ETC. FOR THE GUIDANCE AND PROTECTION OF TRAFFIC AND PEDESTRIANS MUST CONFORM TO THE INSTALLATIONS SHOWN IN THE LATEST EDITION OF THE TEXAS MANUAL ON UNIFORM TRAFFIC CONTROL DEVICES, AS CURRENTLY AMENDED, TEXAS DEPARTMENT OF TRANSPORTATION.
4. ALL FILL IN PUBLIC RIGHT-OF-WAY SHALL BE PLACED IN 6-INCH TO 8-INCH LOOSE LIFTS COMPACTED TO BETWEEN 95% AND 100% OF ITS MAXIMUM DRY DENSITY BETWEEN 0% AND +3% OF OPTIMUM MOUISTURE CONTENT. ALL WORK SHALL BE IN ACCORDANCE WITH THE GEOTECHNICAL REPORT BY OTHERS.
5. ALL TREES, STUMPS, BRUSH, GRASSES AND SURFACE ORGANICS ARE TO BE REMOVED AND PROPERLY DISPOSED OF OFF-SITE. TREE REMOVAL PERMITS, IF REQUIRED, WILL BE OBTAINED BY THE OWNER.
6. EXISTING UTILITY POLES WILL BE REMOVED OR RELOCATED BY THE UTILITY COMPANIES THROUGH COORDINATION BY THE OWNER. CONTRACTOR SHALL BRING TO THE OWNER'S ATTENTION ANY FACILITIES THAT APPEAR TO BE IN CONFLICT SO THAT THE OWNER HAS SUFFICIENT TIME TO ACCOMPLISH THE NECESSARY RELOCATIONS.
7. THE CONTRACTOR SHALL INSTALL EROSION CONTROL MEASURES PER THE PLANS AND MAINTAIN STREETS FREE OF MUD, DIRT AND DEBRIS FOR THE DURATION OF THIS WORK.
8. CONTRACTOR SHALL ASSUME MAINTENANCE OF EROSION CONTROL MEASURES UPON THE DEPARTURE OF THE UTILITY CONTRACTOR OR THE COMMENCEMENT OF PAVING, WHICHEVER IS LATER. OWNER WILL MAINTAIN EROSION CONTROL MEASURES WHEN NO CONTRACTORS ARE ACTIVE ON THE SITE (UNLESS OTHERWISE INDICATED IN CONTRACT DOCUMENTS).
9. SPOT GRADES AT R.O.W. ARE BASED ON ¼"/FT. CROSS SLOPE UNLESS OTHERWISE NOTED. THIS CROSS SLOPE MAY BE VARIED FROM 1% TO 3% TO MAXIMIZE ACCESSIBILITY WITHIN THE BUILDING.
10. NO PRIVATE ENCROACHMENTS INTO PUBLIC RIGHT-OF-WAY SHALL BE ALLOWED EXCEPT AS FOLLOWS: 0' - 10' HEIGHT, NONE; 10' - 20' HEIGHT, ONE FOOT; 20' PLUS, EIGHT FEET UNLESS SPECIFICALLY PRE-APPROVED. THIS INCLUDES ALL WINDOWS, DOORS, HANDRAILS, BALCONIES, LIGHTS, GUTTERS ETC.

RECORD DRAWING

LEGEND:

- TP - TOP OF FINISHED PAVEMENT; (CONCRETE OR BRICK)
- TC - TOP OF CURB
- TW - TOP OF WALL
- BW - BOTTOM OF WALL
- FF - FINISH FLOOR
- EP - EDGE OF PAVEMENT
- 3A-2 BORE HOLE LOCATIONS

THIS PLAN IS FOR SIDEWALK SITE GRADING ONLY. BUILDING ROUGH GRADING IS SHOWN FOR INFORMATIONAL PURPOSES ONLY. SEE ARCHITECT'S PLANS FOR BUILDING FOUNDATION, DETAILED FINISHED FLOOR ELEVATIONS AND DIMENSIONS.

BENCHMARKS:

BM#5
"□" CUT ON 8' INLET ON NORTH CURB LINE OF GOODMAN AVE. ±75' EAST OF PASCHAL PLACE.
ELEV. 629.98

BM#6
"□" CUT AT ℄ OF 8' INLET AT THE SOUTHWEST CORNER OF MORRIS AVE. AND WITT PLACE.
ELEV. 627.29

BM#7
"□" CUT AT WEST CORNER OF ADDISON THEATRE CENTRE PARKING LOT, SECOND ENTRANCE NORTH OF ADDISON RD.
ELEV. 637.66

THE SEAL APPEARING ON THIS DOCUMENT WAS AUTHORIZED BY DAVID E. MEYERS, P.E. 81512

STATE OF TEXAS · DAVID E. MEYERS · 81512 · REGISTERED PROFESSIONAL ENGINEER · 12/18/00

DATE	DESCRIPTION	REF NO.
10/13/99	GRADE REVISED PER TDLR REVIEW	2
7/27/99	REMOVED GRADE BREAK EAST SIDE	1
6/23/99	ISSUED FOR CONSTRUCTION	N/A
5/17/99	ISSUED FOR BID	N/A

BLDG. "3A" SIDEWALK GRADING PLAN

ADDISON CIRCLE

PHASE II-B PUBLIC INFRASTRUCTURE

TOWN OF ADDISON, TEXAS

Huitt - Zollars, Inc.
3131 Mckinney Ave., Suite 600, Dallas, TX 75204
Phone (214) 871-3311/Fax (214) 871-0757

DESIGN	DRAWN	APPR.	SCALE	DATE	PROJECT NO.	NO.
HZI	HZI	DEM	H: 1"=20'	MAR. 99	01-1822-50	GRI

h:\proj\01182250\dgn\AUC3GR01.DGN

h:\proj\01182250\dgn\AUC3GR01.DGN
PRF: R01410W0.PRF000
F:\ISI\MILLER.TBL
B: AUC3BD04.dgn; 2,3,5,13,20,30,36,39=81
Fl: AUC3BME.DGN; 1=5.0-12.4,17-19,23,25-28,30,33-37,39,43-47,51,53,55,58,60,61=.1; ref name=, ref levels=
Fl: AUC3BMS.DGN; 1=.1; ref name=, ref levels=
Ul: AUC3TTL.DGN; ref name=, ref levels=
RF4: AUC3CONT.DGN; 1,2,39 ref name=, ref levels=

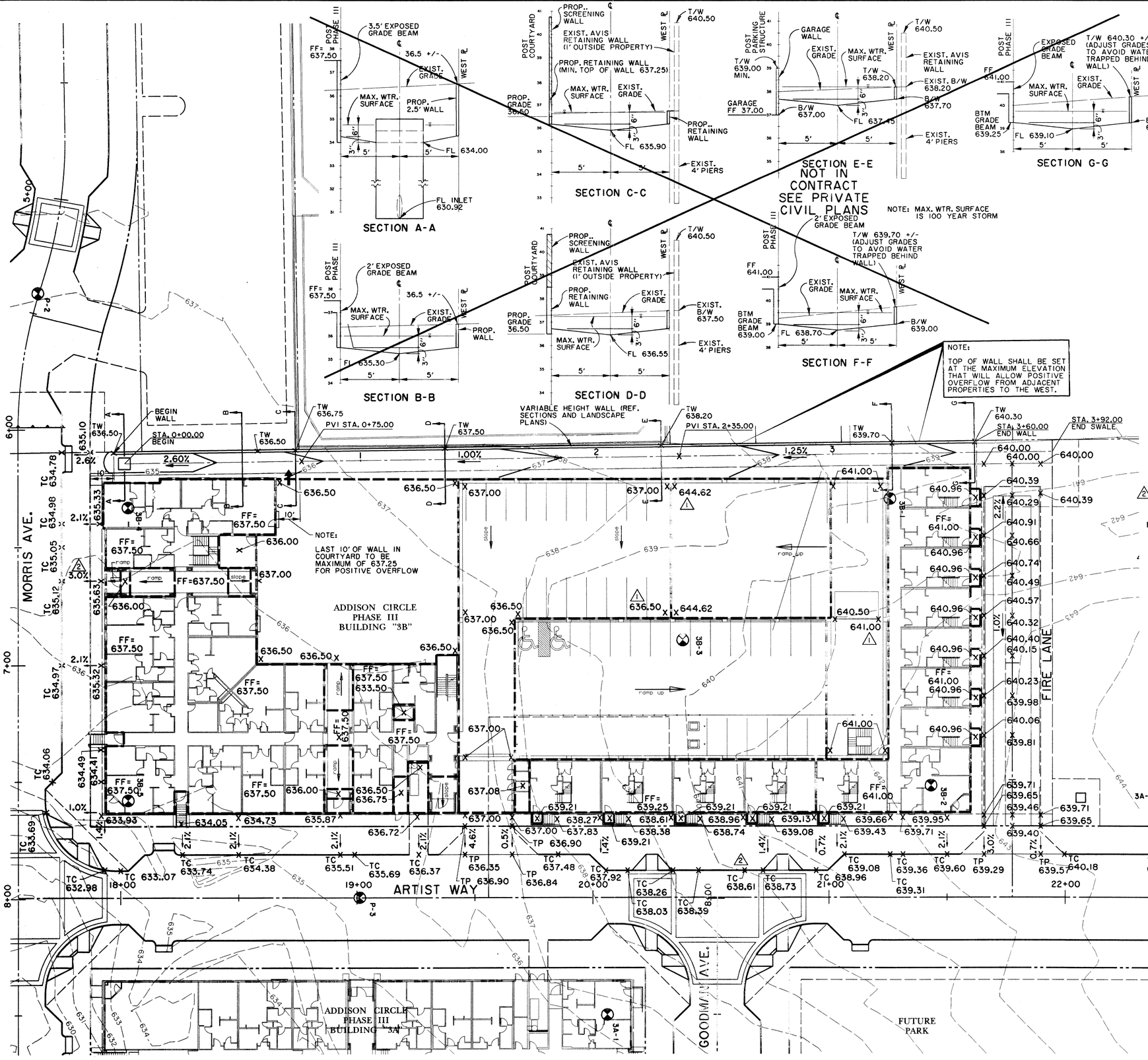

THIS PLAN IS FOR SIDEWALK AND FIRE LANE SITE GRADING ONLY. BUILDING ROUGH GRADING IS SHOWN FOR INFORMATIONAL PURPOSES ONLY. SEE ARCHITECT'S PLANS FOR BUILDING FOUNDATION, DETAILED FINISHED FLOOR ELEVATIONS AND DIMENSIONS.

GRADING NOTES

1. PLAN ELEVATIONS ARE TO FINISHED BUILDING SLAB, PAVEMENT OR PLANTING AREA. ADJUSTMENTS FOR SLAB, PAVEMENT AND PLANTING BED THICKNESS MUST BE MADE FOR THE PURPOSES OF EARTHWORK. REFER TO ARCHITECTURAL AND LANDSCAPE PLANS FOR ELEMENTS NOT DETAILED IN THESE PLANS.
2. ROUGH GRADING SHALL BE ACCOMPLISHED TO WITHIN +0.10 FEET OF PLAN ELEVATION (AFTER ADJUSTMENT FOR FINISH THICKNESS).
3. ALL TRAFFIC CONTROL NECESSARY FOR THE WORK SHALL BE PROVIDED BY THE AFFECTED CONTRACTOR. ALL BARRICADES, WARNING SIGNS, LIGHTS, DEVICES, ETC. FOR THE GUIDANCE AND PROTECTION OF TRAFFIC AND PEDESTRIANS MUST CONFORM TO THE INSTALLATIONS SHOWN IN THE LATEST EDITION OF THE TEXAS MANUAL ON UNIFORM TRAFFIC CONTROL DEVICES, AS CURRENTLY AMENDED, TEXAS DEPARTMENT OF TRANSPORTATION.
4. ALL FILL IN PUBLIC RIGHT-OF-WAY SHALL BE PLACED IN 6-INCH TO 8-INCH LOOSE LIFTS COMPACTED TO BETWEEN 95% AND 100% OF ITS MAXIMUM DRY DENSITY BETWEEN 0% AND +3% OF OPTIMUM MOUISTURE CONTENT. ALL WORK SHALL BE IN ACCORDANCE WITH THE GEOTECHNICAL REPORT BY OTHERS.
5. ALL TREES, STUMPS, BRUSH, GRASSES AND SURFACE ORGANICS ARE TO BE REMOVED AND PROPERLY DISPOSED OF OFF-SITE. TREE REMOVAL PERMITS, IF REQUIRED, WILL BE OBTAINED BY THE OWNER.
6. EXISTING UTILITY POLES WILL BE REMOVED OR RELOCATED BY THE UTILITY COMPANIES THROUGH COORDINATION BY THE OWNER. CONTRACTOR SHALL BRING TO THE OWNER'S ATTENTION ANY FACILITIES THAT APPEAR TO BE IN CONFLICT SO THAT THE OWNER HAS SUFFICIENT TIME TO ACCOMPLISH THE NECESSARY RELOCATIONS.
7. THE CONTRACTOR SHALL INSTALL EROSION CONTROL MEASURES PER THE PLANS AND MAINTAIN STREETS FREE OF MUD, DIRT AND DEBRIS FOR THE DURATION OF THIS WORK.
8. CONTRACTOR SHALL ASSUME MAINTENANCE OF EROSION CONTROL MEASURES UPON THE DEPARTURE OF THE UTILITY CONTRACTOR OR THE COMMENCEMENT OF PAVING, WHICHEVER IS LATER. OWNER WILL MAINTAIN EROSION CONTROL MEASURES WHEN NO CONTRACTORS ARE ACTIVE ON THE SITE (UNLESS OTHERWISE INDICATED IN CONTRACT DOCUMENTS).
9. (2) SPOT GRADES AT R.O.W. ARE BASED ON ¼"/FT. CROSS SLOPE UNLESS OTHERWISE NOTED. THIS CROSS SLOPE MAY BE VARIED FROM 1% TO 5% TO MAXIMIZE ACCESSIBILITY WITHIN THE BUILDING.
10. NO PRIVATE ENCROACHMENTS INTO PUBLIC RIGHT-OF-WAY SHALL BE ALLOWED EXCEPT AS FOLLOWS: 0' - 10' HEIGHT, NONE; 10' - 20' HEIGHT, ONE FOOT; 20' PLUS, EIGHT FEET UNLESS SPECIFICALLY PRE-APPROVED. THIS INCLUDES ALL WINDOWS, DOORS, HANDRAILS, BALCONIES, LIGHTS, GUTTERS ETC.

RECORD DRAWING

LEGEND:

- TP - TOP OF FINISHED PAVEMENT; (CONCRETE OR BRICK)
- TC - TOP OF CURB
- TW - TOP OF WALL
- BW - BOTTOM OF WALL
- FF - FINISH FLOOR
- EP - EDGE OF PAVEMENT
- BORE HOLE LOCATIONS

BENCHMARKS:

BM#5
"□" CUT ON 8' INLET ON NORTH CURB LINE OF GOODMAN AVE. ±75' EAST OF PASCHAL PLACE. ELEV. 629.98

BM#6
"□" CUT AT ℄ OF 8' INLET AT THE SOUTHWEST CORNER OF MORRIS AVE. AND WITT PLACE. ELEV. 627.29

BM#7
"□" CUT AT WEST CORNER OF ADDISON THEATRE CENTRE PARKING LOT, SECOND ENTRANCE NORTH OF ADDISON RD. ELEV. 637.66

THE SEAL APPEARING ON THIS DOCUMENT WAS AUTHORIZED BY DAVID E. MEYERS, P.E. 81512

STATE OF TEXAS · DAVID E. MEYERS · 81512 · REGISTERED PROFESSIONAL ENGINEER · 12/13/00

DATE	DESCRIPTION	REF NO.
10/13/99	GRADE REVISED PER TDLR REVIEW	2
7/23/99	REVISED GARAGE GRADES	1
6/23/99	ISSUED FOR CONSTRUCTION	N/A
5/17/99	ISSUED FOR BID	N/A

BLDG. "3B" SIDEWALK & FIRE LANE GRADING PLAN

ADDISON CIRCLE

PHASE II-B PUBLIC INFRASTRUCTURE

TOWN OF ADDISON, TEXAS

Huitt - Zollars, Inc.
3131 Mckinney Ave., Suite 600, Dallas, TX 75204
Phone (214) 871-3311/Fax (214) 871-0757

DESIGN	DRAWN	APPR.	SCALE	DATE	PROJECT NO.	NO.
HZI	HZI	DEM	H: 1"=20'	MAR. 99	01-1822-50	GR2

h:\proj\01182250\dgn\AUC3GR02.DGN

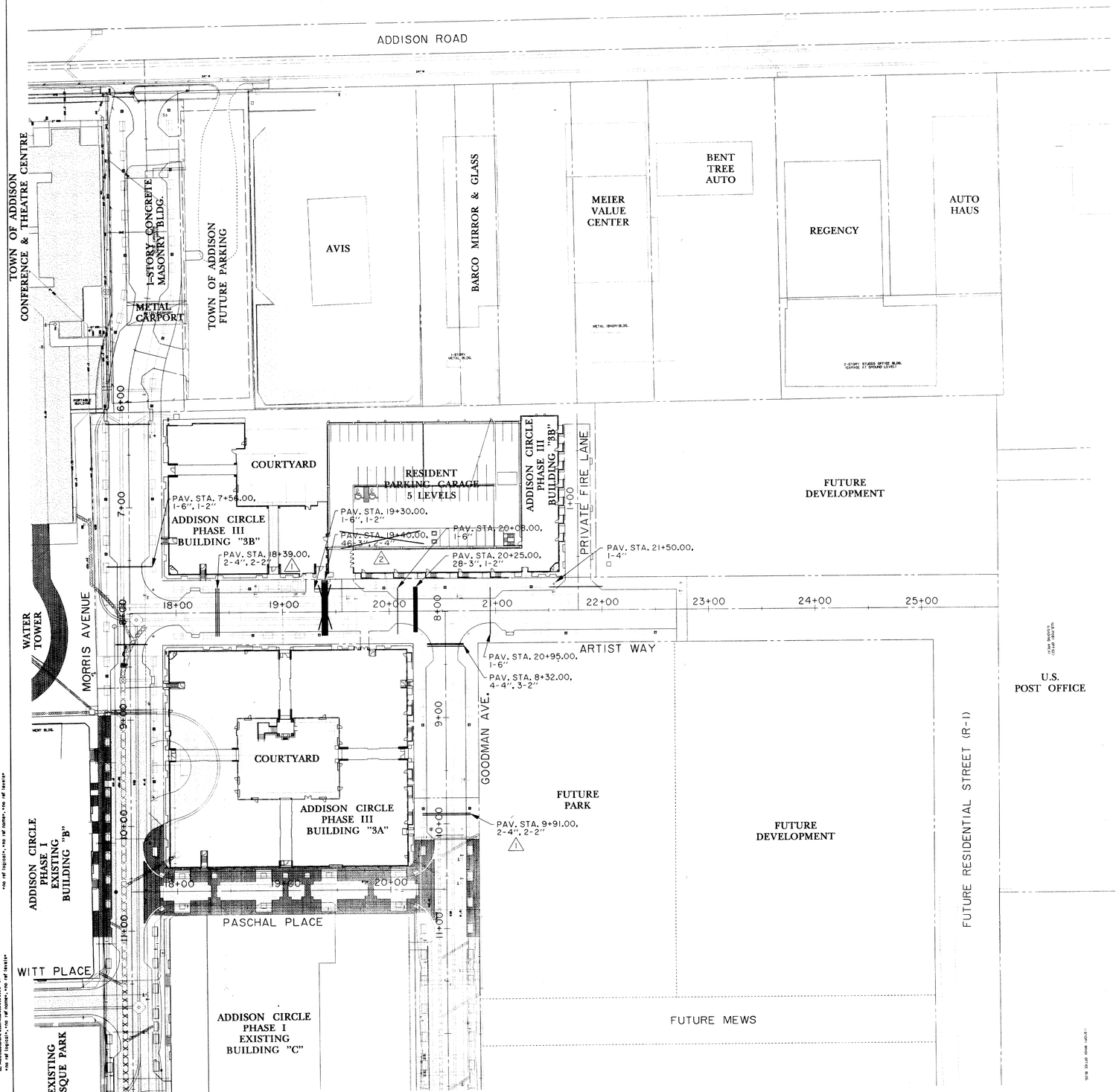

N

0 25 50 75 100
SCALE IN FEET

NOTE:
CONTRACTOR SHALL CONTACT ALL UTILITIES AND PRIVATE APARTMENT DEVELOPER TO INSURE THAT ALL NECESSARY SLEEVES ARE INSTALLED PRIOR TO PAVING.

NOTE:
MINIMUM COVER OF CONDUIT SLEEVES SHALL BE 2.5' FROM TOP OF CURB.

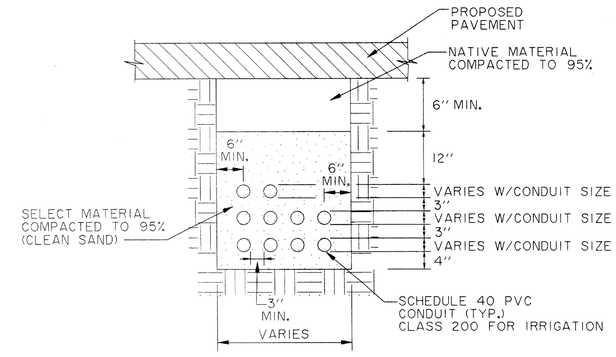

TYPICAL CONDUIT/SLEEVE EMBEDMENT
N.T.S.

RECORD DRAWING

STREET	STATION	SLEEVE SIZE AND USE
ARTIST WAY	18+39.00	3-4" COMMUNICATION, 1-2" COMMUNICATION
ARTIST WAY	19+30.00	1-6" IRRIGATION, 1-2" STREET LIGHT (UNDER DRIVE)
~~ARTIST WAY~~	~~19+40.00~~	~~46-3" ELECTRICAL, 2-4" ELECTRICAL~~
ARTIST WAY	20+08.00	1-6" IRRIGATION
ARTIST WAY	20+25.00	28-3" ELECTRICAL, 1-2" STREET LIGHT
ARTIST WAY	20+95.00	1-6" IRRIGATION
ARTIST WAY	21+50.00	1-4" IRRIGATION
GOODMAN AVE.	8+32.00	4-4" COMMUNICATION, 2-2" COMMUNICATION, 1-2" STREET LIGHT
GOODMAN AVE.	9+91.00	3-4" COMMUNICATION, 1-2" COMMUNICATION
MORRIS AVE.	7+56.00	1-6" IRRIGATION
MORRIS AVE.	7+56.00	1-2" STREET LIGHT

BENCHMARKS:

BM#5
'□' CUT ON 8' INLET ON NORTH CURB LINE OF GOODMAN AVE. ±75' EAST OF PASCHAL PLACE.
ELEV. 629.98

BM#6
'□' CUT AT ℄ OF 8' INLET AT THE SOUTHWEST CORNER OF MORRIS AVE. AND WITT PLACE.
ELEV. 627.29

BM#7
'□' CUT AT WEST CORNER OF ADDISON THEATRE CENTRE PARKING LOT, SECOND ENTRANCE NORTH OF ADDISON RD.
ELEV. 637.66

THE SEAL APPEARING ON THIS DOCUMENT WAS AUTHORIZED BY DAVID E. MEYERS, P.E. 81512

STATE OF TEXAS
DAVID E. MEYERS
81512
REGISTERED
PROFESSIONAL ENGINEER
12/18/01

DATE	DESCRIPTION	REF NO.
11/23/99	ITEMS DELETED FROM CONTRACT	2
8/25/99	SLEEVE REVISION TO MATCH REVISED PRIVATE COMMUNICATION	1
6/23/99	ISSUED FOR CONSTRUCTION	N/A
5/17/99	ISSUED FOR BID	N/A

SLEEVING PLAN

ADDISON CIRCLE

PHASE II-B PUBLIC INFRASTRUCTURE

TOWN OF ADDISON, TEXAS

Hulitt - Zollars, Inc.
3131 Mckinney Ave., Suite 600, Dallas, TX 75204
Phone (214) 871-3311/Fax (214) 871-0757

DESIGN	DRAWN	APPR.	SCALE	DATE	PROJECT NO.	NO.
HZI	HZI	DEM	1"=50'	MAR. 99	01-1822-50	P12

h:\proj\01182250\dgn\AUC3SV01.DGN

T: AUCSTGFOOON; 1-18,4,6,8,28,29,51-54,57,62
U: AUCSHADE.OON; 1-3,5,11-15,18,20,22-24,31,33,36,40-42,44,46-50,52
P: AUCSHADE.OON; 1-3,5,11-15,18,20,22-24,31,33,36,40-42,44,46-50,52
B: AUC3BD.OON; 25,13,25,50,56,59-61
PRF ROTATION=0.920000
FI:\BI\MILLER.TBL
h:\proj\01182250\dgn\AUC3SV01.DGN
Mon Jan 18 17:05:54 2000
I:\HZDALLAS2\DISK01\FILOTT\NG-405\MAUC3SV01.PRF
Hulitt-Zollars, Inc.

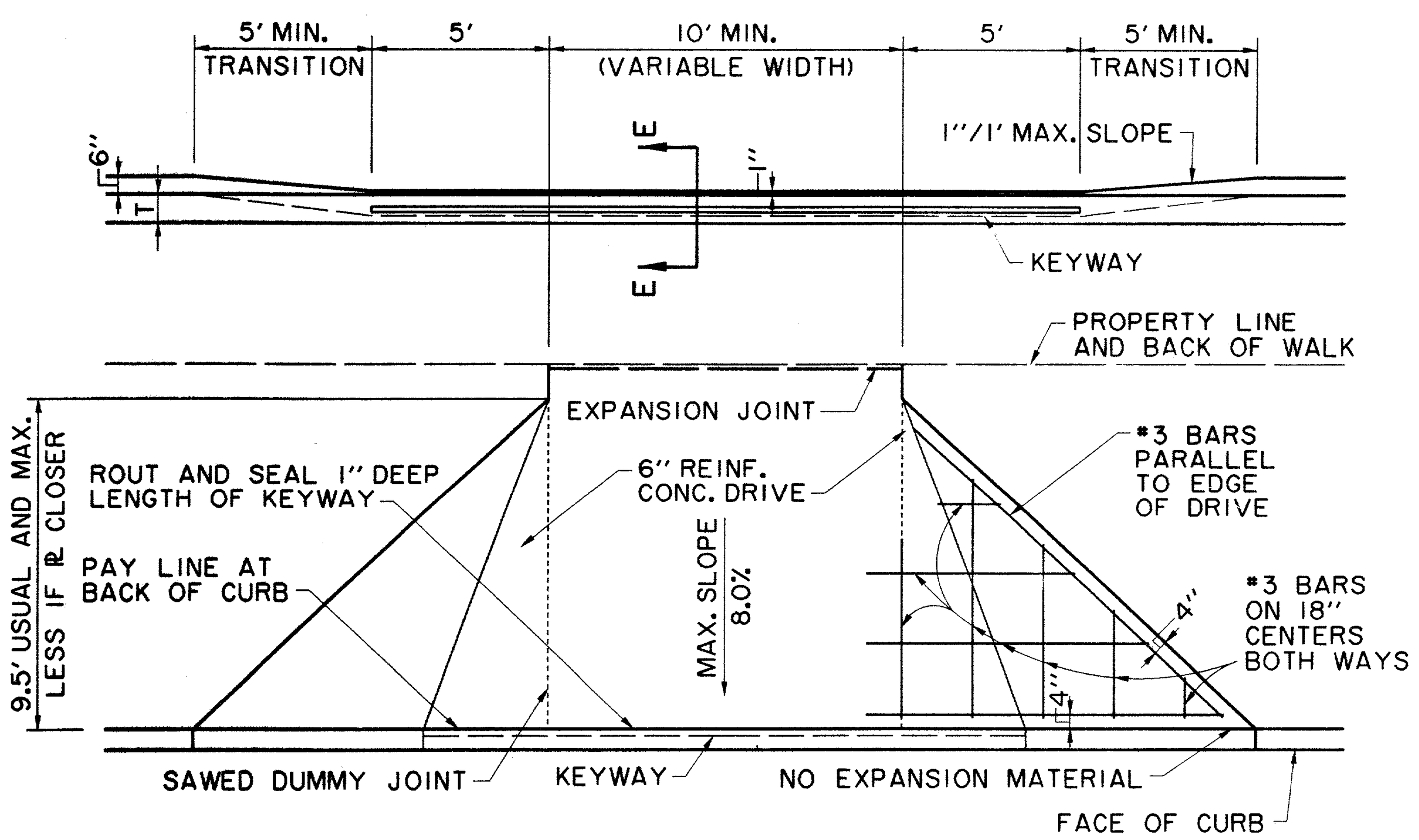

DRIVEWAY TURNOUT DETAIL

NOTES:

1. PAVEMENT JOINTS SHALL NOT EXTEND THROUGH DRIVE.

2. KEYWAY LIMITS SHALL COINCIDE WITH LIMITS OF 1" CURB.

3. REINFORCING STEEL SHALL NOT EXTEND THROUGH KEYWAY. DRIVE WILL NOT BE TIED TO PAVEMENT.

4. MAXIMUM SLOPE ON DRIVE IN ANY DIRECTION SHOULD BE 1"/1' TO RESPECT PRINCIPLES OF BARRIER FREE CONSTRUCTION.

5. LENGTH OF TRANSITION FOR CURB AT EACH SIDE OF DRIVE MAY VARY DUE TO STREET GRADES AND REQUIREMENT TO HOLD MAXIMUM SLOPE OF 1"/1'.

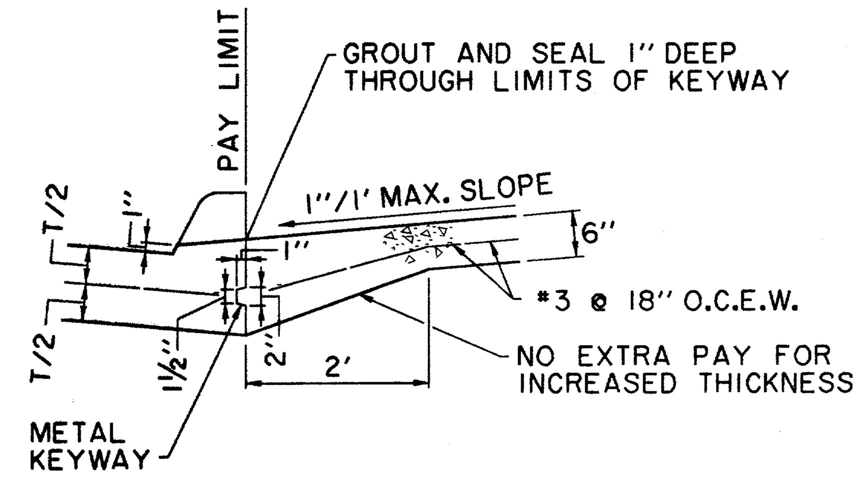

SECTION E-E

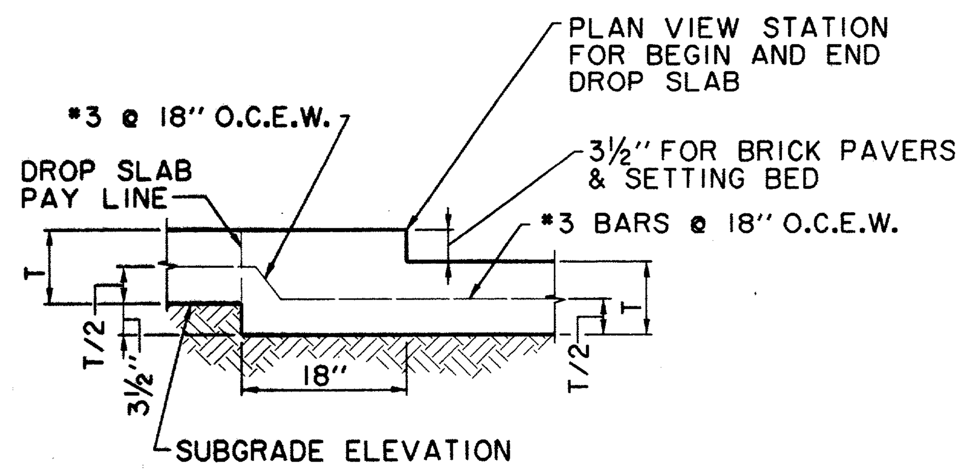

SECTION C-C
LONGITUDINAL SECTION
AT DROP SLAB IN STREET

N.T.S.

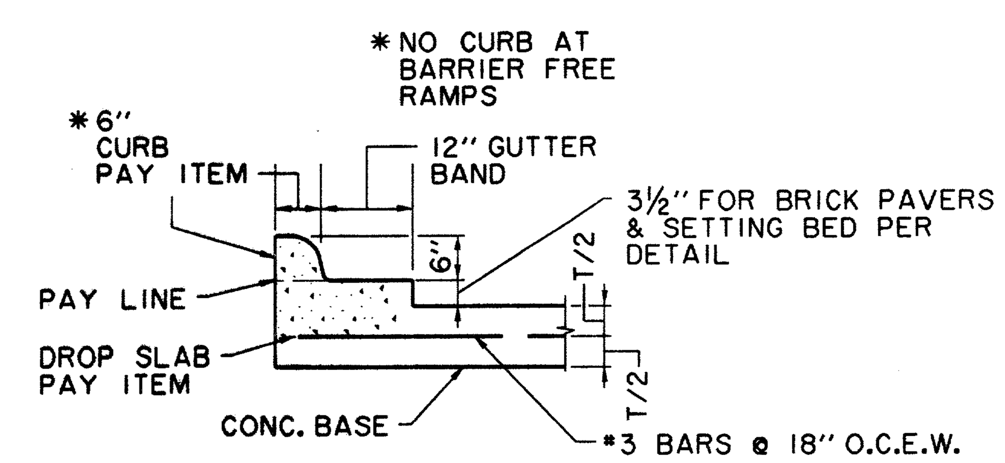

SECTION D-D
SECTION THRU CURB AT DROP SLAB

N.T.S.

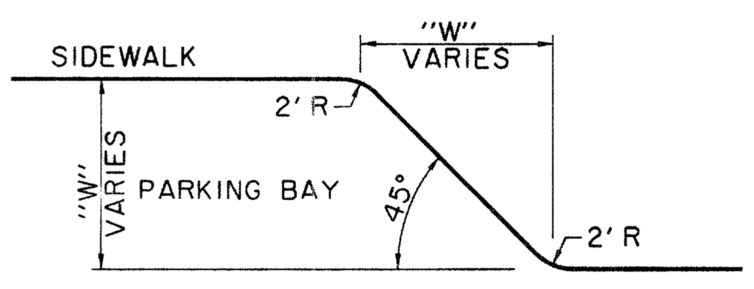

PARKING TRANSITION DETAIL

N.T.S.

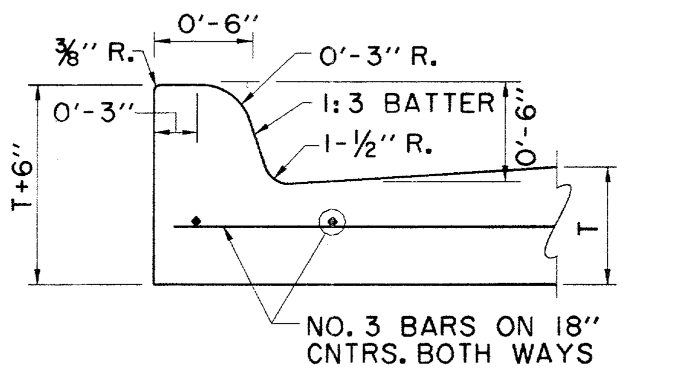

INTEGRAL CURB AND GUTTER

N.T.S.

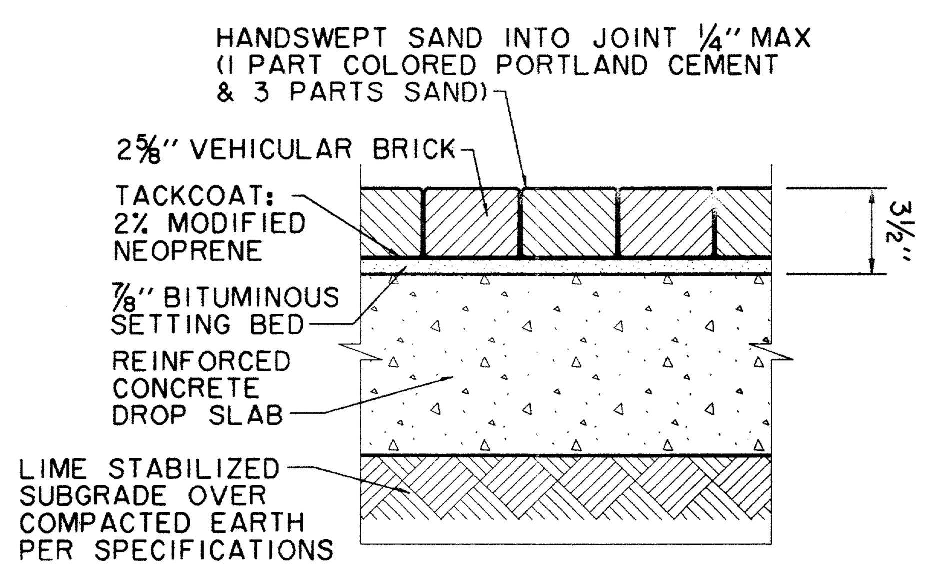

VEHICULAR BRICK INSTALLATION
IN VEHICULAR AREAS

N.T.S.

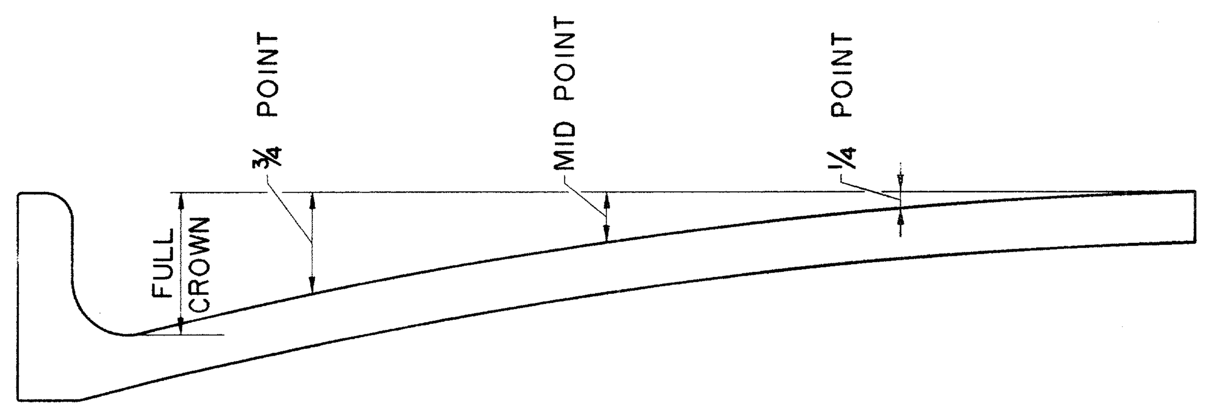

ROADWAY WIDTH (F-F)	TYPE SURFACE	FULL CROWN	¾ POINT	MID POINT	¼ POINT
20'	CONCRETE	3"	1-11/16"	¾"	3/16"
20'	ASPHALT	4"	2-¼"	1"	¼"
26'	CONCRETE	4"	2-¼"	1"	¼"
26'	ASPHALT	5"	2-13/16"	1-¼"	5/16"
33'	CONCRETE	6"	3-⅜"	1-½"	⅜"
33'	ASPHALT	7"	3-15/16"	1-¾"	7/16"
36'	CONCRETE	6"	3-⅜"	1-½"	⅜"
36'	ASPHALT	7"	3-15/16"	1-¾"	7/16"
40'	CONCRETE	6"	3-⅜"	1-½"	⅜"
40'	ASPHALT	7"	3-15/16"	1-¾"	7/16"
44'	CONCRETE	6"	3-⅜"	1-½"	⅜"
44'	ASPHALT	7"	3-15/16"	1-¾"	7/16"
56'	CONCRETE	8"	4-½"	2"	½"
56'	ASPHALT	9"	5-1/16"	2-¼"	9/16"
60'	CONCRETE	8"	4-½"	2"	½"
60'	ASPHALT	9"	5-1/16"	2-¼"	9/16"

TABLE OF CROWN HEIGHTS AND ORDINATES
FOR VARIOUS PARABOLIC SECTIONS

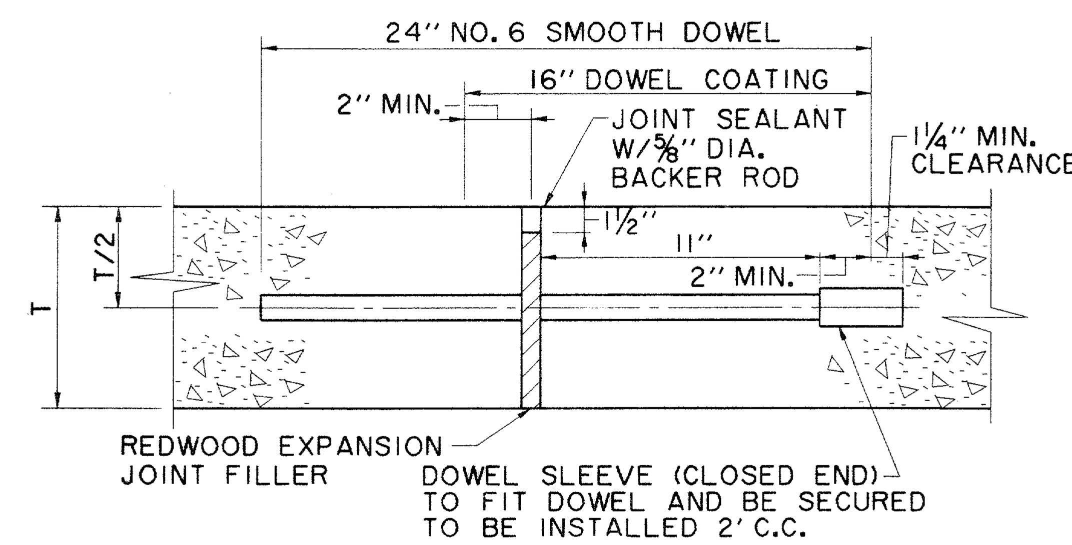

TRANSVERSE EXPANSION JOINT

N.T.S.

(SPACED 600 FT. MAXIMUM, LOCATE AT CURB RETURN OF INTERSECTIONS)
NOTE:
DOWELS AND REINFORCING BARS SHALL BE SUPPORTED BY AN APPROVED DEVICE.

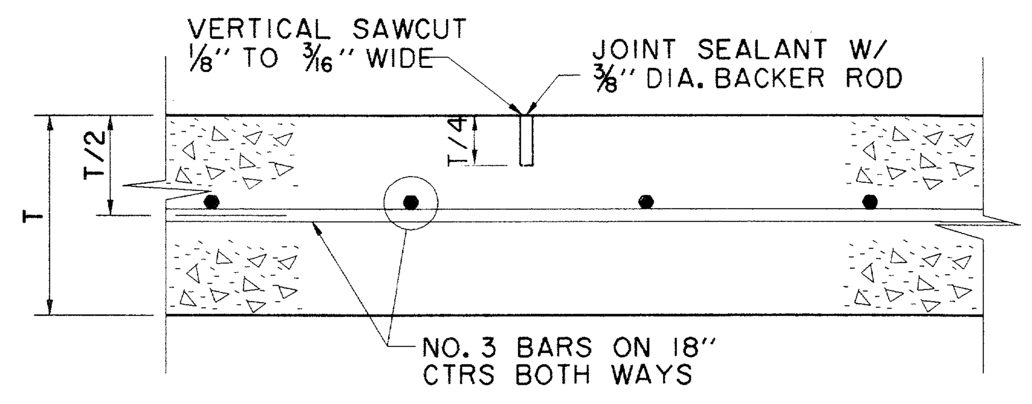

SAWED DUMMY JOINT

N.T.S.

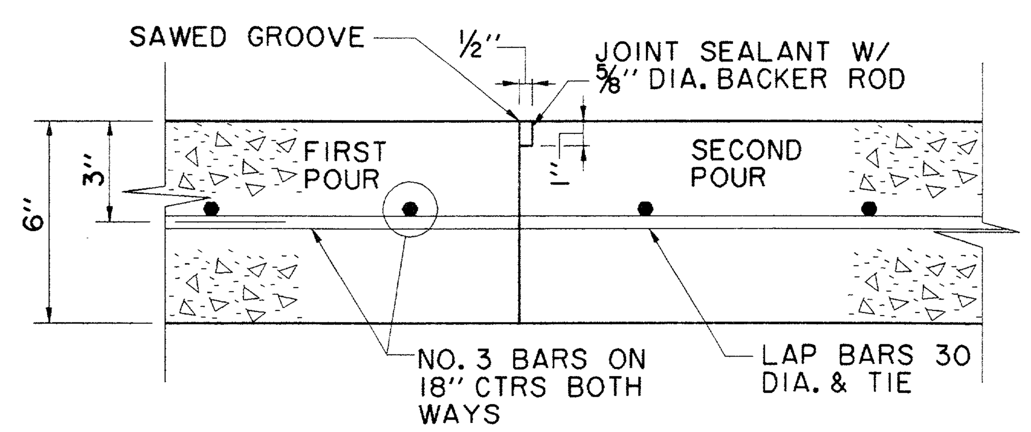

CONSTRUCTION JOINT FOR 6" PAVEMENT

N.T.S.

NOTES-PAVING AND GRADING

1. UNLESS SPECIFICALLY STATED OTHERWISE IN PLANS OR CONTRACT DOCUMENTS, THE CONTROLLING SPECIFICATIONS FOR ALL WORK WITHIN PUBLIC RIGHTS-OF-WAY AND EASEMENTS SHALL BE THE STANDARD SPECIFICATIONS FOR PUBLIC WORKS CONSTRUCTION, SECOND EDITION 1987, AS AMENDED BY THE NORTH CENTRAL TEXAS COUNCIL OF GOVERNMENTS (THE ''STANDARD SPECIFICATIONS''). COPIES OF THE STANDARD SPECIFICATIONS MAY BE PURCHASED BY MAIL OR OVER THE COUNTER FROM THE NORTH CENTRAL TEXAS COUNCIL OF GOVERNMENTS, 616 SIX FLAGS DRIVE, P.O. BOX DRAWER COG, ARLINGTON, TEXAS 76005-5888, PHONE METRO 817/640-3300. BULK DISCOUNTS ARE AVAILABLE. THIS DOCUMENT IS COPYRIGHTED.
2. THE PAVING AREAS SHALL BE GRADED TO +/- .10' OF FINISHED SUBGRADE ELEVATIONS BY THE PAVING CONTRACTOR. SIDEWALK AREAS SHALL BE GRADED TO +/- .10' OF FINISHED PAVEMENT ELEVATIONS BY THE PAVING CONTRACTOR. THE UTILITY CONTRACTOR SHALL VERIFY AND ACCEPT GRADE PRIOR TO THE COMMENCEMENT OF HIS WORK. THE UTILITY CONTRACTOR SHALL RESTORE THE GRADE TO THE TOLERANCES NOTED ABOVE. THE STREETSCAPE CONTRACTOR SHALL VERIFY AND ACCEPT THE GRADE PRIOR TO THE COMMENCEMENT OF HIS WORK. THE STREETSCAPE CONTRACTOR SHALL EXCAVATE SIDEWALK AREAS JUST PRIOR TO THE PLACEMENT OF SIDEWALK SUB-BASE.
3. ALL TRAFFIC CONTROL NECESSARY FOR THE WORK SHALL BE PROVIDED BY THE AFFECTED CONTRACTOR. ALL BARRICADES, WARNING SIGNS, LIGHTS, DEVICES, ETC. FOR THE GUIDANCE AND PROTECTION OF TRAFFIC AND PEDESTRIANS MUST CONFORM TO THE INSTALLATIONS SHOWN IN THE LATEST ISSUE OF THE ''TEXAS MANUAL ON UNIFORM TRAFFIC CONTROL DEVICES FOR STREETS AND HIGHWAYS (MUTCD)'', AS CURRENTLY AMENDED, TEXAS DEPARTMENT OF TRANSPORTATION.
4. ALL FILL SHALL BE PLACED IN MAXIMUM 8-INCH LIFTS COMPACTED TO 95% OF STANDARD PROCTOR DENSITY BETWEEN 0% AND +3% OF OPTIMUM MOISTURE CONTENT.
5. ALL TREES, STUMPS, BRUSH, GRASSES AND SURFACE ORGANICS WITHIN PROPOSED RIGHT-OF-WAY ARE TO REMOVED AND PROPERLY DISPOSED OF OFF-SITE. TREE REMOVAL PERMITS, IF REQUIRED, WILL BE OBTAINED BY THE OWNER.
6. EXISTING UTILITY POLES, IF ANY, WILL BE REMOVED OR RELOCATED BY THE UTILITY COMPANIES THROUGH COORDINATION BY THE OWNER. CONTRACTOR SHALL BRING TO THE OWNER'S ATTENTION ANY FACILITIES THAT APPEAR TO BE IN CONFLICT SO THAT THE OWNER HAS SUFFICIENT TIME TO ACCOMPLISH THE NECESSARY RELOCATIONS.
7. ALL REINFORCING STEEL AND DOWEL BARS IN PAVEMENT SHALL BE SUPPORTED AND MAINTAINED AT THE CORRECT CLEARANCES BY THE USE OF BAR CHAIRS OR OTHER APPROVED SUPPORT.
8. THE USE OF WOOD FORMS FOR PAVEMENT CONSTRUCTION WILL BE PERMITTED.
9. SAWED JOINTS SHALL BE SPACED AT 12' INTERVALS ON MORRIS AVE., GOODMAN AVE. AND ARTIST WAY.
10. BARRIER-FREE RAMPS WILL BE BUILT WITH THIS PROJECT. LOCATIONS MAY BE ADJUSTED AS DIRECTED BY THE ENGINEER TO CLEAR OBSTRUCTIONS.
11. VARIABLE HEIGHT CURB AT INTERSECTIONS AND SLOPING CURBS AT DRIVES SHALL BE BUILT TO MATCH BARRIER-FREE RAMPS PER PLANS. NO SEPARATE PAY ITEMS ARE PROVIDED.
12. TWO-WAY TRAFFIC MUST BE MAINTAINED AT ALL TIMES ON PUBLIC STREETS ADJACENT TO THIS PROJECT UNLESS SPECIFIED OTHERWISE IN THE PLANS AND SPECIFICATIONS. THE TRAVELWAY WIDTH SHALL NOT BE LESS THAN 11 FEET.
13. SEE TYPICAL SECTIONS SHEET FOR ADDITIONAL MATERIAL SPECIFICATIONS.
14. ALL CURBS SHALL BE PLACED INTEGRAL WITH PAVEMENT.
15. CURBS SHALL MEET THE SAME COMPRESSIVE STRENGTH AS SPECIFIED FOR THE CONCRETE PAVEMENT.
16. BAR LAPS SHALL BE 30 DIAMETERS.
17. FINISH SHALL BE TRANSVERSE WITH TRAFFIC LANES AND SHALL BE STEEL TINED BROOM FINISH.
18. SEE PAVING DETAILS FOR BRICK AND SIDEWALK PATTERNS. POUR SIDEWALK AROUND NOTED LEAVEOUTS PER LOCATIONS ON PAVING PLANS.

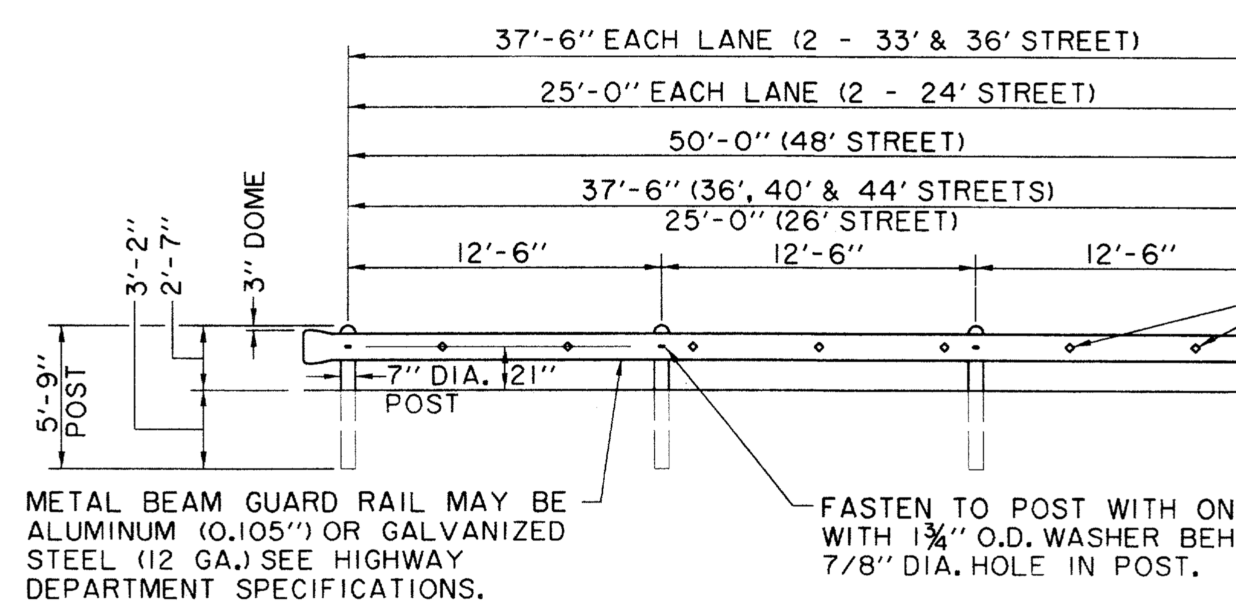

BARRICADE DETAIL
FRONT ELEVATION

N.T.S.

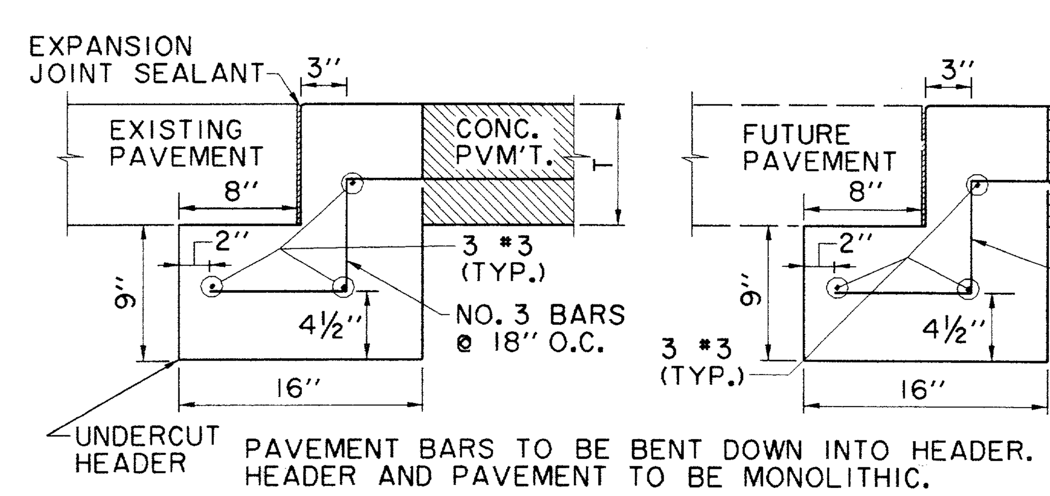

PAVEMENT BARS TO BE BENT DOWN INTO HEADER. HEADER AND PAVEMENT TO BE MONOLITHIC.

STREET HEADER

N.T.S.

RECORD DRAWING

THE SEAL APPEARING ON THIS DOCUMENT WAS AUTHORIZED BY DAVID E. MEYERS, P.E. 81512

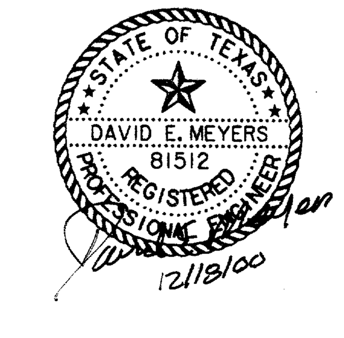

DATE	DESCRIPTION	REF NO.
6/23/99	ISSUED FOR CONSTRUCTION	N/A
5/17/99	ISSUED FOR BID	N/A

PAVING DETAILS

ADDISON CIRCLE

PHASE II-B PUBLIC INFRASTRUCTURE

TOWN OF ADDISON, TEXAS

Huitt - Zollars, Inc.
3131 Mckinney Ave., Suite 600, Dallas, TX 75204
Phone (214) 871-3311/Fax (214) 871-0757

DESIGN	DRAWN	APPR.	SCALE	DATE	PROJECT NO.	NO.
HZI	HZI	DEM	N.T.S.	MAR. 99	01-1822-50	P13

h:\proj\01182250\dgn\AUC3TY13.DGN
h:\proj\01182250\dgn\AUC3TY13.DGN
Fri Dec 8 15:28:30 2000
\\HZDALLAS2\DISKO\PLOTTING\400M\AUC3TY13.PRF
Huitt-Zollars, Inc.
PRF ROTATION=90.000000
F:\tbl\MILLER.TBL
B, AUC3B0.DGN, 4,5,8,13,16,20,23-29,32-34,37-39,43-52,55-61
no ref logical, *no ref name*, *no ref levels*

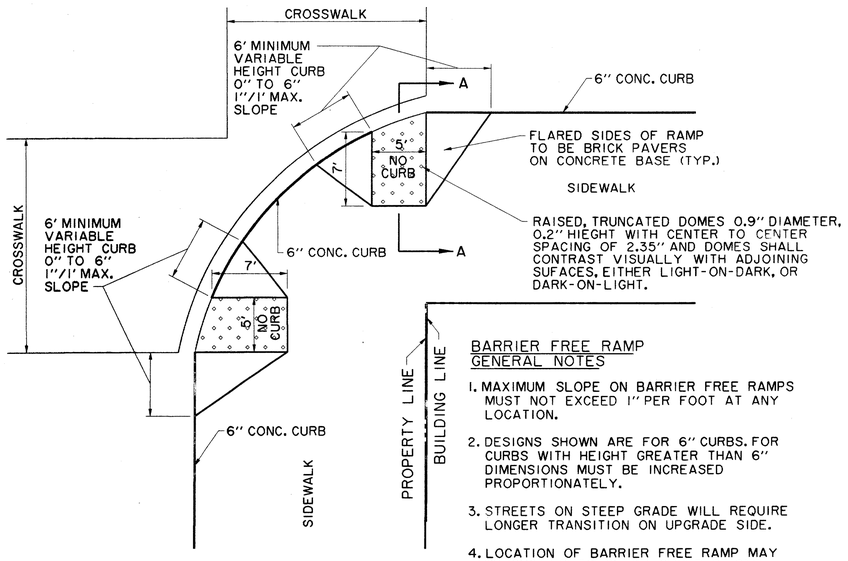

BARRIER FREE RAMP GENERAL NOTES

1. MAXIMUM SLOPE ON BARRIER FREE RAMPS MUST NOT EXCEED 1" PER FOOT AT ANY LOCATION.
2. DESIGNS SHOWN ARE FOR 6" CURBS. FOR CURBS WITH HEIGHT GREATER THAN 6" DIMENSIONS MUST BE INCREASED PROPORTIONATELY.
3. STREETS ON STEEP GRADE WILL REQUIRE LONGER TRANSITION ON UPGRADE SIDE.
4. LOCATION OF BARRIER FREE RAMP MAY BE SHIFTED TO CLEAR OBSTRUCTIONS.
5. CONCRETE TO HAVE MINIMUM 3000 P.S.I. COMPRESSIVE STRENGTH AT 28 DAYS.
6. REINFORCEMENT TO BE #3 DEFORMED BARS AT 18" O.C.E.W. AND SUPPORTED BY APPROVED BAR CHAIRS ON 3'-0" CENTERS.

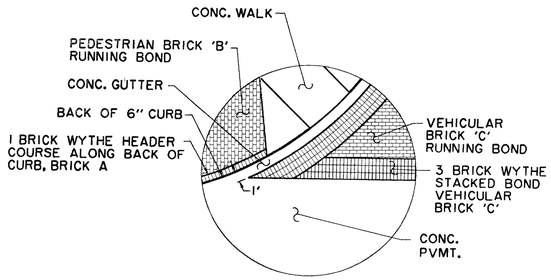

A — CROSSWALK DETAIL

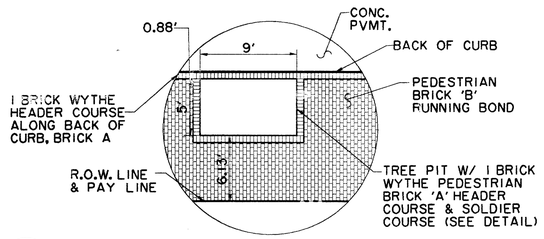

B — 5' X 9' TREE PIT DETAIL
(MORRIS AVE, ARTIST WAY, GOODMAN AVE.)

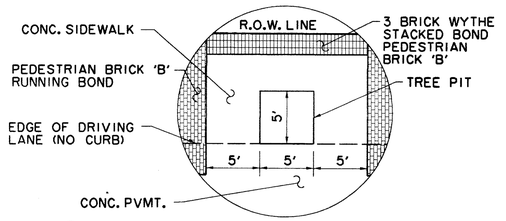

C — 5' X 5' TREE PIT DETAIL
(PASCHAL PLACE)

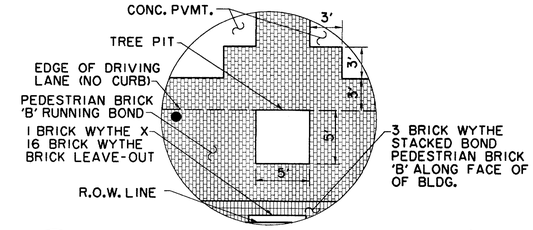

D — 5' X 5' TREE PIT DETAIL
(PASCHAL PLACE)

BARRIER FREE RAMP DETAIL AT INTERSECTING STREET ⚠

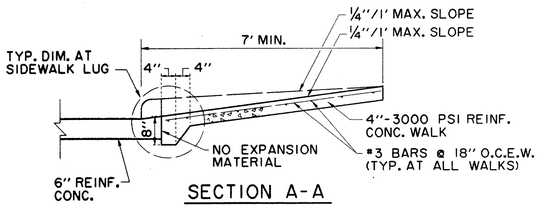

SECTION A-A

NOTES:

1. ALL HONEYCOMB IN BACK OF CURB SHALL BE TROWEL-PLASTERED BEFORE POURING SIDEWALK
2. LUG MAY BE FORMED BY SHAPING SUBGRADE TO APPROXIMATE DIMENSIONS SHOWN.

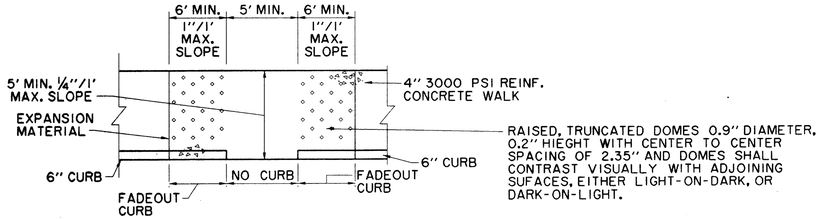

BARRIER FREE RAMP IN STRAIGHT CURB ⚠
SIDEWALK ADJACENT TO CURB

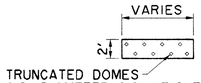

DETECTABLE WARNING STRIP

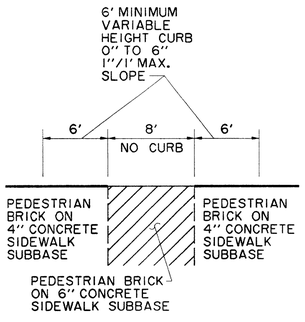

CURB CUT FOR TRASH PICKUP

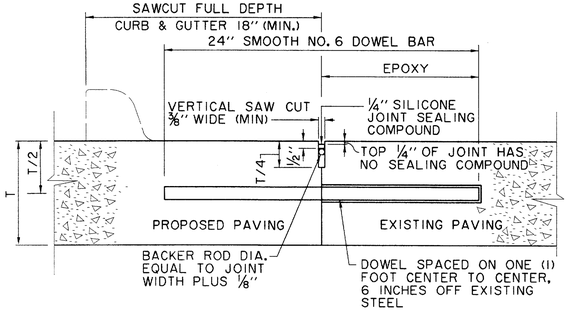

DOWEL BARS SHALL BE DRILLED INTO EX. PAVEMENT HORIZONTALLY BY USE OF A MECHANICAL RIG. DRILLING BY HAND IS NOT ACCEPTABLE. PUSHING DOWEL BARS INTO GREEN CONCRETE NOT ACCEPTABLE.

LONGITUDINAL BUTT JOINT
N.T.S.

BRICK TYPES

VEHICULAR BRICK "C" - 2⅝"X3½"X7½" ACME (GAURNET RED)
PEDESTRIAN BRICK "A" - 2¼"X4"X8" GLEN-GERY (BROWN)
PEDESTRIAN BRICK "B" - 2¼"X4"X8" GLEN-GERY (AUTUMN HAZE)

RECORD DRAWING

THE SEAL APPEARING ON THIS DOCUMENT WAS AUTHORIZED BY DAVID E. MEYERS, P.E. 81512

STATE OF TEXAS — DAVID E. MEYERS 81512 — REGISTERED PROFESSIONAL ENGINEER — 12/18/00

DATE	DESCRIPTION	REF NO.
10/13/99	DETAIL REVISED PER TDLR REVIEW	1
6/23/99	ISSUED FOR CONSTRUCTION	N/A
5/17/99	ISSUED FOR BID	N/A

PAVING DETAILS

ADDISON CIRCLE

PHASE II-B PUBLIC INFRASTRUCTURE

TOWN OF ADDISON, TEXAS

Hiatt - Zollars, Inc.
3131 Mckinney Ave., Suite 600, Dallas, TX 75204
Phone (214) 871-3311 / Fax (214) 871-0757

DESIGN	DRAWN	APPR.	SCALE	DATE	PROJECT NO.	NO.
HZI	HZI	DEM	N.T.S.	MAR. 99	01-1822-50	P14

h:\proj\01182250\dgn\AUC3TY08.DGN

PRF (ROTATION=90.000000
F:\ss\MILLER.TBL
h:\proj\01182250\dgn\AUC3TY08.DGN
F:\ss\MILLER.TBL
Hiatt-Zollars, Inc.
B_AUC3BDGN_4,5,6,7,10,20,23-28,32-34,37-39,43-52,55-61
no ref layout, *no ref name*, *no ref levels*

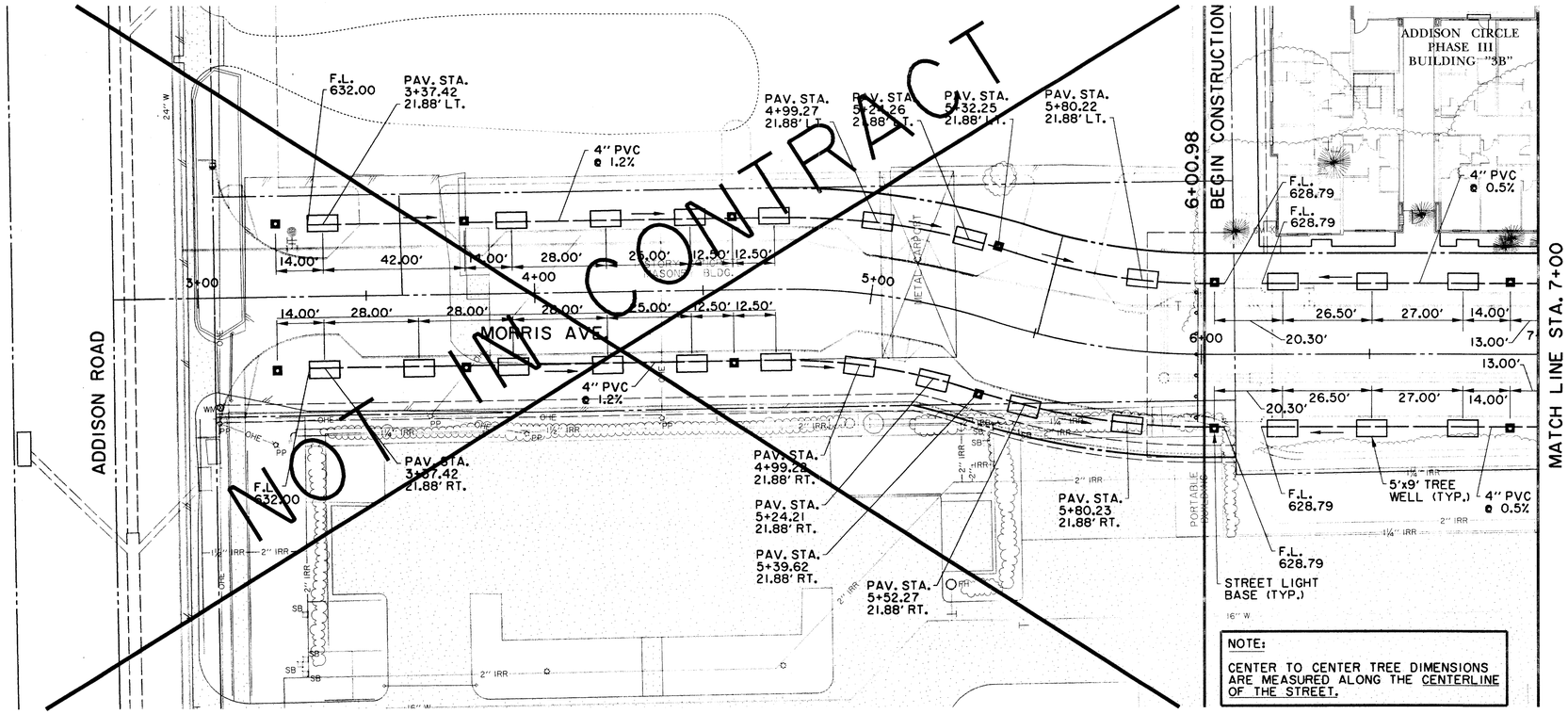

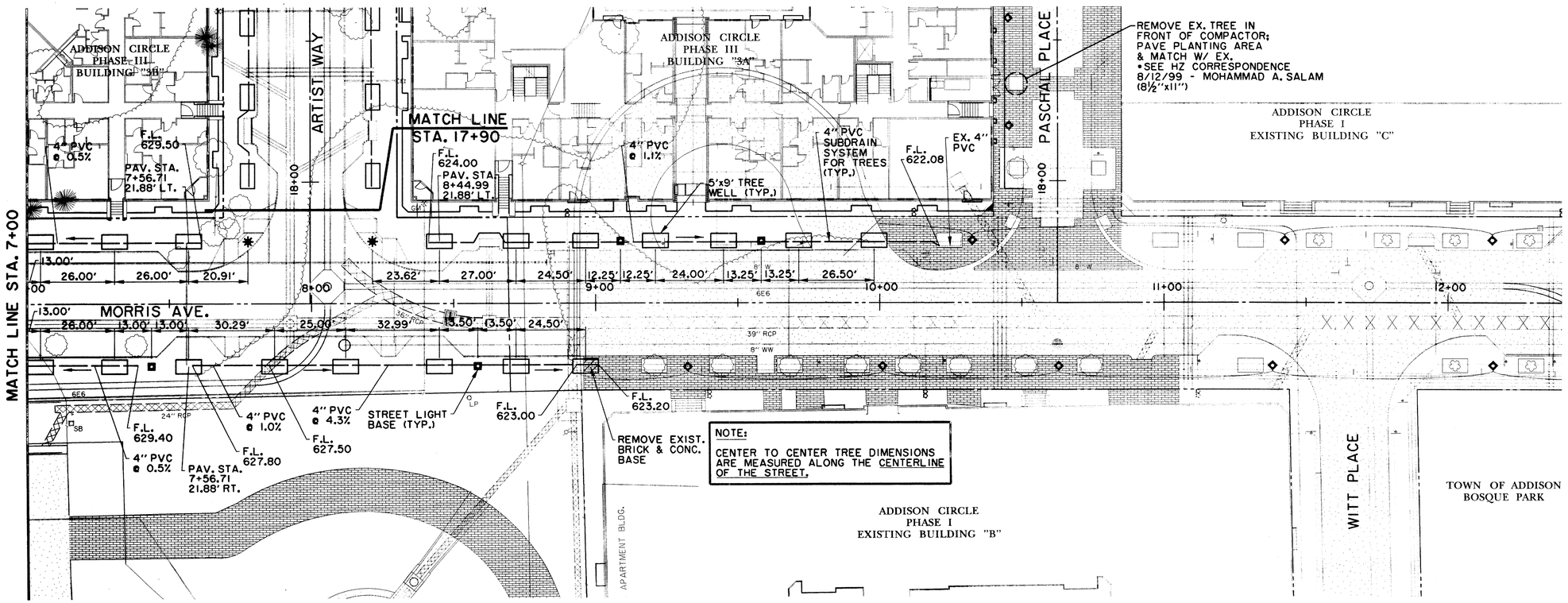

N

0 10 20 30 40
SCALE IN FEET

RECORD DRAWING

BENCHMARKS:

BM*5
"□" CUT ON 8' INLET ON NORTH CURB LINE OF GOODMAN AVE. ±75' EAST OF PASCHAL PLACE.
ELEV. 629.98

BM*6
"□" CUT AT ℄ OF 8' INLET AT THE SOUTHWEST CORNER OF MORRIS AVE. AND WITT PLACE.
ELEV. 627.29

BM*7
"□" CUT AT WEST CORNER OF ADDISON THEATRE CENTRE PARKING LOT, SECOND ENTRANCE NORTH OF ADDISON RD.
ELEV. 637.66

THE SEAL APPEARING ON THIS DOCUMENT WAS AUTHORIZED BY DAVID E. MEYERS, P.E. 81512

STATE OF TEXAS · DAVID E. MEYERS · 81512 · REGISTERED PROFESSIONAL ENGINEER · 12/1/00

DATE	DESCRIPTION	REF NO.
6/23/99	ISSUED FOR CONSTRUCTION	N/A
5/17/99	ISSUED FOR BID	N/A

STREETSCAPE PLAN
MORRIS AVENUE

ADDISON CIRCLE
PHASE II-B PUBLIC INFRASTRUCTURE

TOWN OF ADDISON, TEXAS

Huitt - Zollars, Inc.
3131 Mckinney Ave., Suite 600, Dallas, TX 75204
Phone (214) 871-3311/Fax (214) 871-0757

DESIGN	DRAWN	APPR.	SCALE	DATE	PROJECT NO.	NO.
HZI	HZI	DEM	1"=20'	MAR. 99	01-1822-50	STI

h:\proj\01182250\dgn\AUC3LS01.DGN

P:\proj\01182250\dgn\AUC3LS0.DGN
PRF ROTATION=90.820000
F:\in\MILLER.TBL
Huitt-Zollars, Inc.
P2, AUC3BASE.DGN, 1-5;1-14,16-22,25-28,3,35,40-42,44-50,56,57
P1, AUC3BASE.DGN, 1-5;1-14,16-22,25-28,3,35,40-42,44-50,56,57
I2, AUC3UTIL.DGN, 1-43
T4, AUC3CONT.DGN, 1-3,8-10,14-18,20-28,31-34,36-82
UI, AUC3UTIL.DGN, 1-43
T2, AUC3CONT.DGN, 1-3,8-10,14-18,20-28,31-34,36-82
*** NO REFERENCE FILES ***

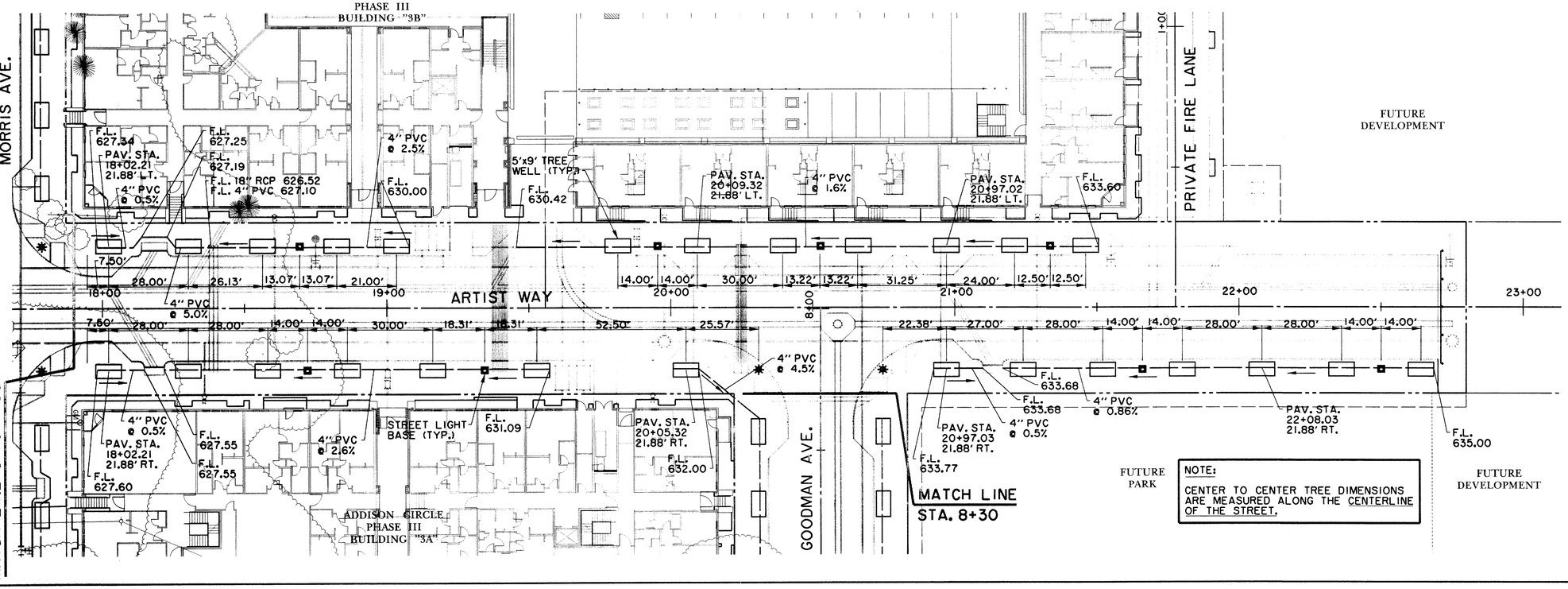

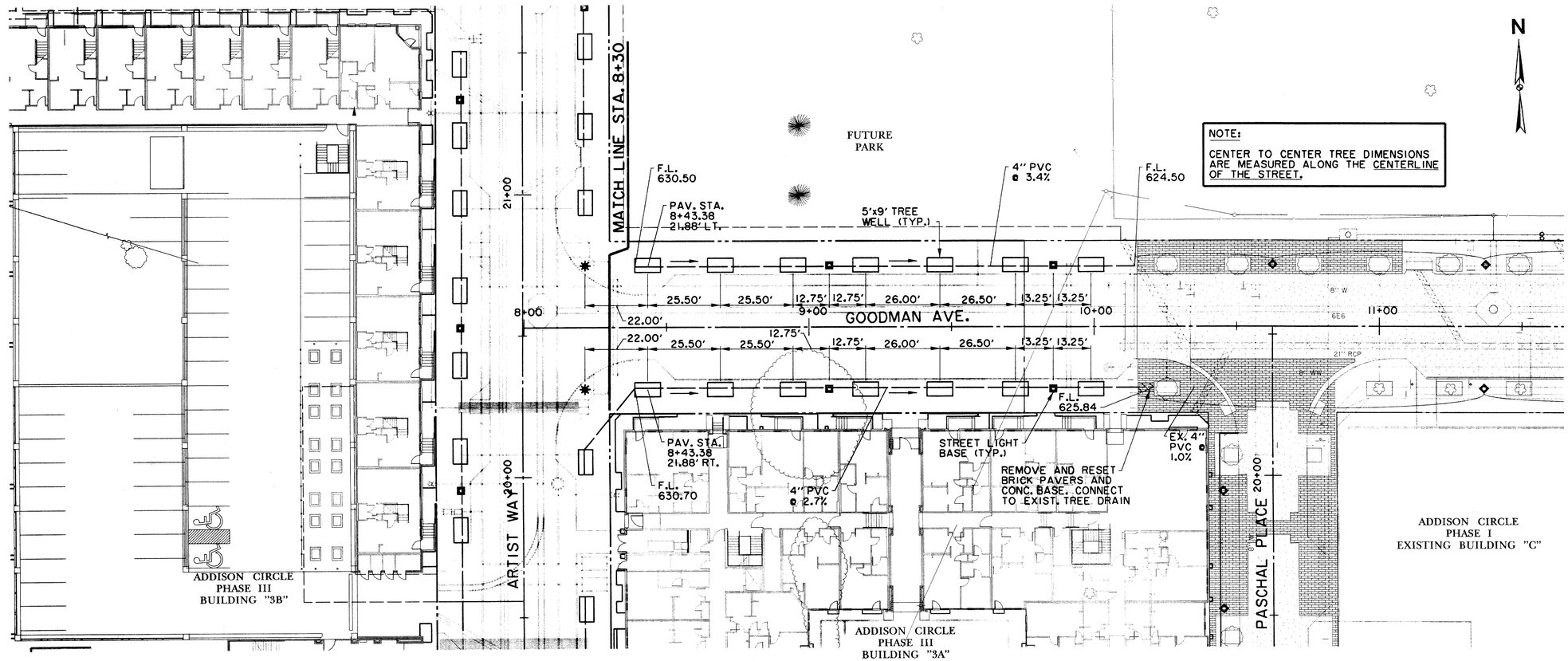

N

0 10 20 30 40
SCALE IN FEET

RECORD DRAWING

BENCHMARKS:

BM#5
"□" CUT ON 8' INLET ON NORTH CURB LINE OF GOODMAN AVE. ±75' EAST OF PASCHAL PLACE.
ELEV. 629.98

BM#6
"□" CUT AT ℄ OF 8' INLET AT THE SOUTHWEST CORNER OF MORRIS AVE. AND WITT PLACE.
ELEV. 627.29

BM#7
"□" CUT AT WEST CORNER OF ADDISON THEATRE CENTRE PARKING LOT, SECOND ENTRANCE NORTH OF ADDISON RD.
ELEV. 637.66

THE SEAL APPEARING ON THIS DOCUMENT WAS AUTHORIZED BY DAVID E. MEYERS, P.E. 81512

STATE OF TEXAS
DAVID E. MEYERS
81512
REGISTERED ENGINEER
PROFESSIONAL
12/19/00

DATE	DESCRIPTION	REF NO.
6/23/99	ISSUED FOR CONSTRUCTION	N/A
5/17/99	ISSUED FOR BID	N/A

STREETSCAPE PLAN
ARTIST WAY & GOODMAN AVE.

ADDISON CIRCLE
PHASE II-B PUBLIC INFRASTRUCTURE

TOWN OF ADDISON, TEXAS

Huitt - Zollars, Inc.
3131 Mckinney Ave., Suite 600, Dallas, TX 75204
Phone (214) 871-3311/Fax (214) 871-0757

DESIGN	DRAWN	APPR.	SCALE	DATE	PROJECT NO.	NO.
HZI	HZI	DEM	1"=20'	MAR. 99	01-1822-50	ST2

h:\proj\01182250\dgn\AUC3LS02.DGN

T3, AUC3TOPO.DGN; I-5,6,17,21-25,29,31-46,51-54,56,57,60-62
T4, AUC3GRID.DGN; I-3,8-10,14-18,20-23,26,27,30,47-50,55,58,59
U1, AUC3UTIL.DGN; I-5,7,11-14,18-22,28-33,35,40-42,44-50,56,57
P1, AUC3BASE.DGN; I-5,7,11-14,18-22,28-33,35,40-42,44-50,56,57
P2, AUC3BASE.DGN; I-6,15,16,34,36,37,39,43-55,57-60,62
U1, AUC3UTIL.DGN; I-63
T2, AUC3CONT.DGN; I-3,8-10,14-18,20-23,26,31-34,59-62
B, AUC3BLOCK.DGN; I-4,A,B,15,16,20,23-29,32-39,43-55,63-81
PRF ROTATIONS.S20000
FY1991/MILLER.TBL
h:\proj\01182250\dgn\AUC3LS02.DGN
Fri Dec 8 14:03:20 2000 (DGNLIB)
Version 8.05.03.59
Huitt-Zollars, Inc.

GENERAL NOTES CONCRETE SUBBASE FOR SIDEWALKS

1. REINFORCED CONCRETE SIDEWALK SHALL BE A MINIMUM OF FOUR (4) INCHES THICK AND SHALL BE 3000 PSI AT 28 DAYS (5 SACK MIX) UNLESS NOTED OTHERWISE.
2. A ¼" CHAMFER OR ¼" RADIUS WILL BE REQUIRED ON ALL EXPOSED EDGES OF CONCRETE SIDEWALK.
3. ALL BAR DIMENSIONS ARE GIVEN AS CENTER TO CENTER OF BARS AND ARE LOCATED AS SHOWN.
4. ALL REINFORCING STEEL SHALL BE NO. 3 ON 18" CENTERS LONGITUDINALLY, 18" CENTERS TRANSVERSELY AND SHALL CONFORM TO THE REQUIREMENTS OF ASTM A-615, GRADE 60.
5. 1" THICK MIN. FINE WASHED SAND CUSHION SHALL BE FREE FROM ORGANIC MATERIALS OR CLAYS AND SHALL BE USED FOR GRADE ADJUSTMENT.
6. SUBGRADE SHALL BE COMPACTED TO A DENSITY NOT LESS THAN 95% OF STANDARD PROCTOR DENSITY AT 0 TO +3% OF OPTIMUM MOISTURE.
7. TOOLED JOINTS (CONTRACTION JOINTS) SHALL BE ON FIVE (5) FOOT CENTERS AND SHALL BE ROUND ONE-FOURTH (1/4) INCH RADIUS.
8. A ONE-HALF (1/2) INCH EXPANSION JOINT SHALL BE PLACED EVERY FORTY (40) FEET, AND WHERE WORKS ABUT OLD WORK, OR WHERE NEW WORK IS CONSTRUCTED ADJACENT TO OTHER CONCRETE. A ONE-HALF (1/2) INCH EXPANSION JOINT SHALL BE USED WHERE SIDEWALK IS ADJACENT TO CURB. THE EXPANSION JOINT SHALL BE MADE OF PRE-MOLDED BITUMINOUS EXPANSION JOINT FILLER. THE EXPANSION JOINT WILL END AT THE TOP OF THE CONCRETE BASE.
9. EXPOSED SIDEWALKS SHALL BE FINISHED BY LIGHTLY BROOMING SURFACE TRANSVERSELY TO DIRECTION OF MAIN TRAFFIC.
10. THE ONE-FOURTH (1/4) INCH PER FOOT CROSS SLOPE IN SIDEWALK AREAS IS THE STANDARD CONDITION.

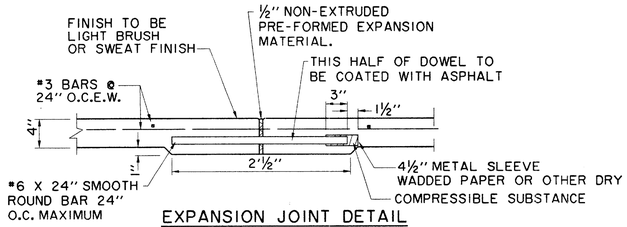

EXPANSION JOINT DETAIL

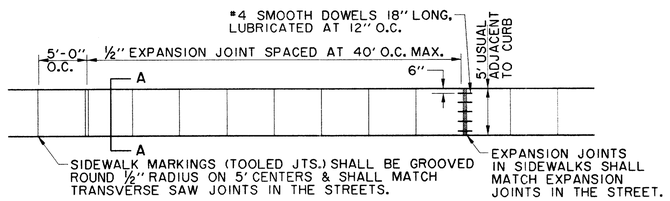

REINFORCED CONCRETE SIDEWALK
EAST SIDE OF QUORUM DRIVE
N.T.S.

PLAN

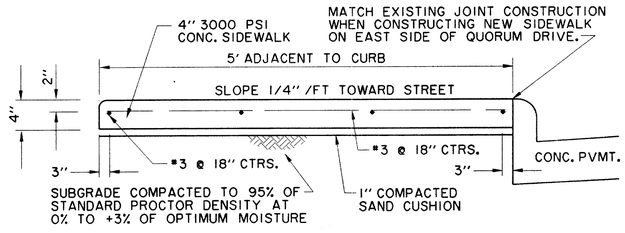

TYPICAL SECTION A-A
N.T.S.

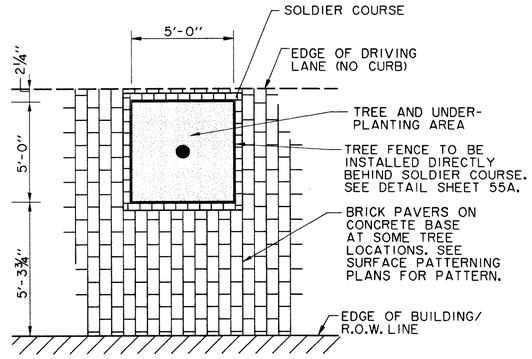

TREE PIT PLAN
PASCHAL PLACE (WEST SIDE)
N.T.S.

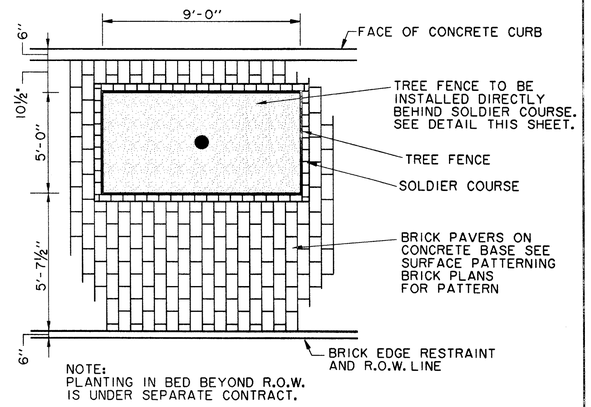

NOTE:
PLANTING IN BED BEYOND R.O.W. IS UNDER SEPARATE CONTRACT.

TREE PIT PLAN
(MORRIS AVE., ARTIST WAY & GOODMAN AVE.)
N.T.S.

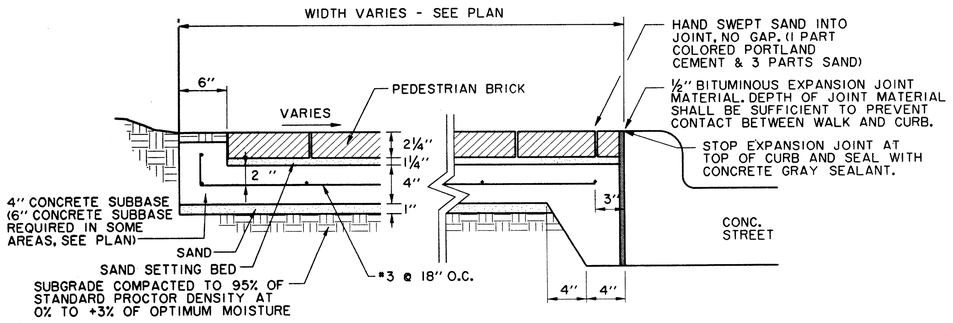

BRICK SIDEWALK INSTALLATION IN PEDESTRIAN AREA AT PLANTING BED
MORRIS AVE., GOODMAN AVE., ARTIST WAY
N.T.S.

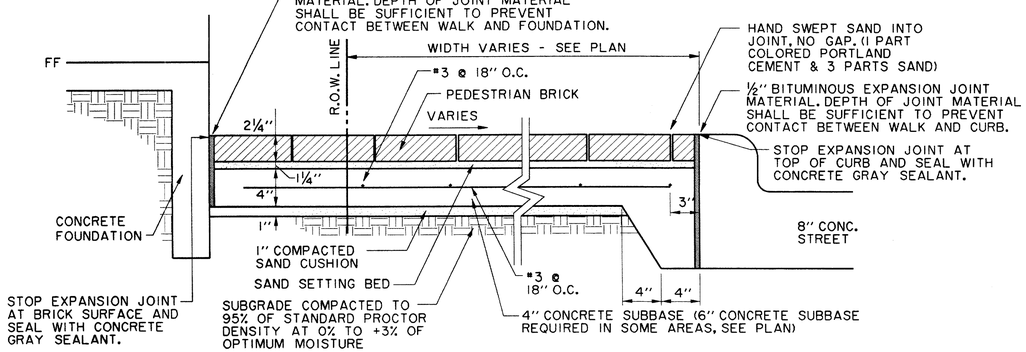

BRICK SIDEWALK INSTALLATION IN PEDESTRIAN AREA TO BLDG. FACE
MORRIS AVE. (NORTH SIDE), GOODMAN AVE. (SOUTH SIDE), ARTIST WAY (EAST & WEST SIDE)
N.T.S.

RECORD DRAWING

THE SEAL APPEARING ON THIS DOCUMENT WAS AUTHORIZED BY DAVID E. MEYERS, P.E. 81512

STATE OF TEXAS · DAVID E. MEYERS · 81512 · REGISTERED PROFESSIONAL ENGINEER · 12/13/00

DATE	DESCRIPTION	REF NO.
6/23/99	ISSUED FOR CONSTRUCTION	N/A
5/17/99	ISSUED FOR BID	N/A

STREETSCAPE DETAILS

ADDISON CIRCLE

PHASE II-B PUBLIC INFRASTRUCTURE

TOWN OF ADDISON, TEXAS

Huitt - Zollars, Inc.
3131 Mckinney Ave., Suite 600, Dallas, TX 75204
Phone (214) 871-3311 / Fax (214) 871-0757

DESIGN	DRAWN	APPR.	SCALE	DATE	PROJECT NO.	NO.
HZI	HZI	DEM	N.T.S.	MAR. 99	01-1822-50	ST3

h:\proj\01182250\dgn\AUC3TY07.DGN

PRF: 8X11(NON-RO-000000 F:\WIN\WALLER.TBL
h:\proj\01182250\dgn\AUC3TY07.DGN Fri Dec. 8 14:54:38 2000 [user:dmeyers] [MSTN V8.00.00.70 (CIT) IND-NOMA-AUC3TY07.DGN] Huitt-Zollars, Inc.
B_MICROGEN_A,A,A,1,A,0,0,23,23,-23,32,-23,43,-23,55-01 *no ref logical*, *no ref name*, *no ref levels* *no ref logical*, *no ref name*, *no ref levels* *no ref logical*, *no ref name*, *no ref levels* *no ref logical*, *no ref name*, *no ref levels* *no ref logical*, *no ref name*, *no ref levels* *no ref logical*, *no ref name*, *no ref levels* *no ref logical*, *no ref name*, *no ref levels* *no ref logical*, *no ref name*, *no ref levels*

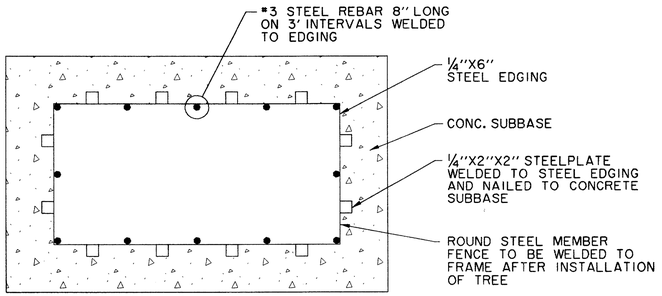

TREE FENCE FRAME INSTALLATION DETAIL

N.T.S.

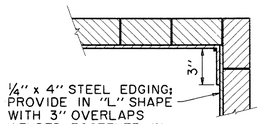

STEEL EDGING OVERLAP DETAIL

N.T.S.

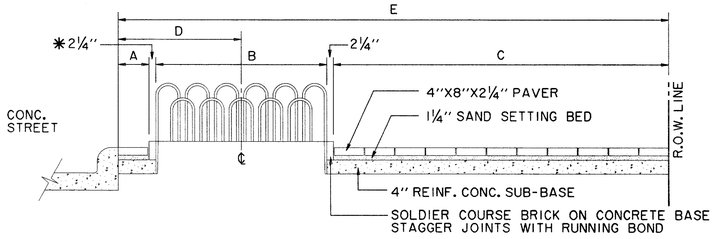

LOCATION	A	B	C	D	E
MORRIS AVE., ARTIST WAY & GOODMAN AVE.	8 1/4"	5'-0"	5'-11 1/4"	3'-4 1/2"	12'-0"
PASCHAL PLACE	0	5'-0"	5'-1 1/2"	2'-8 1/4"	10'-6"

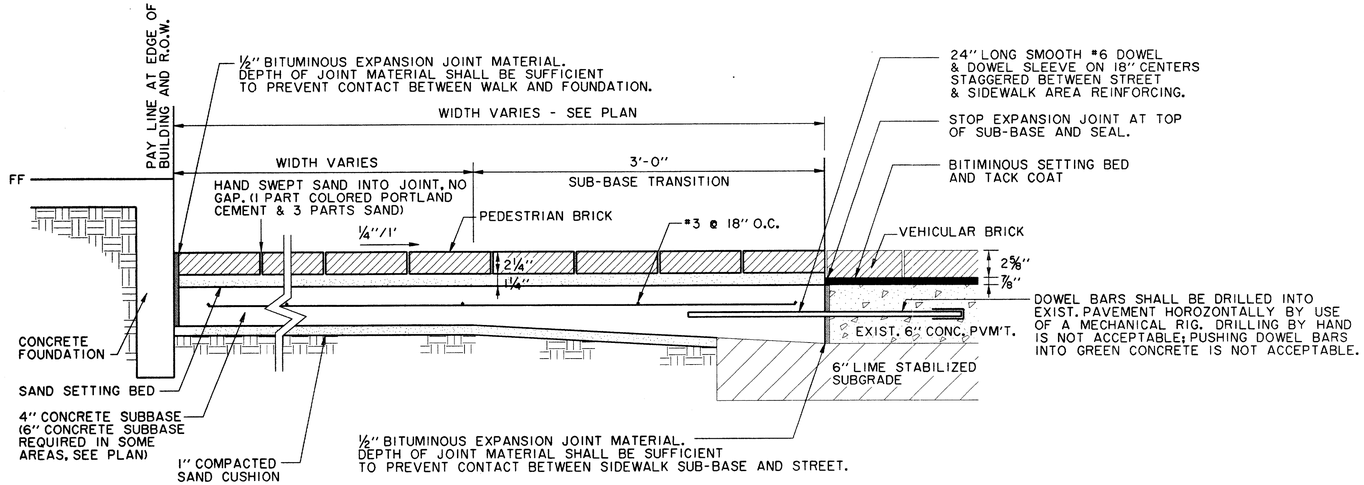

BRICK SIDEWALK IN PEDESTRIAN AREA AT JUNCTION WITH PASCHAL PLACE

N.T.S.

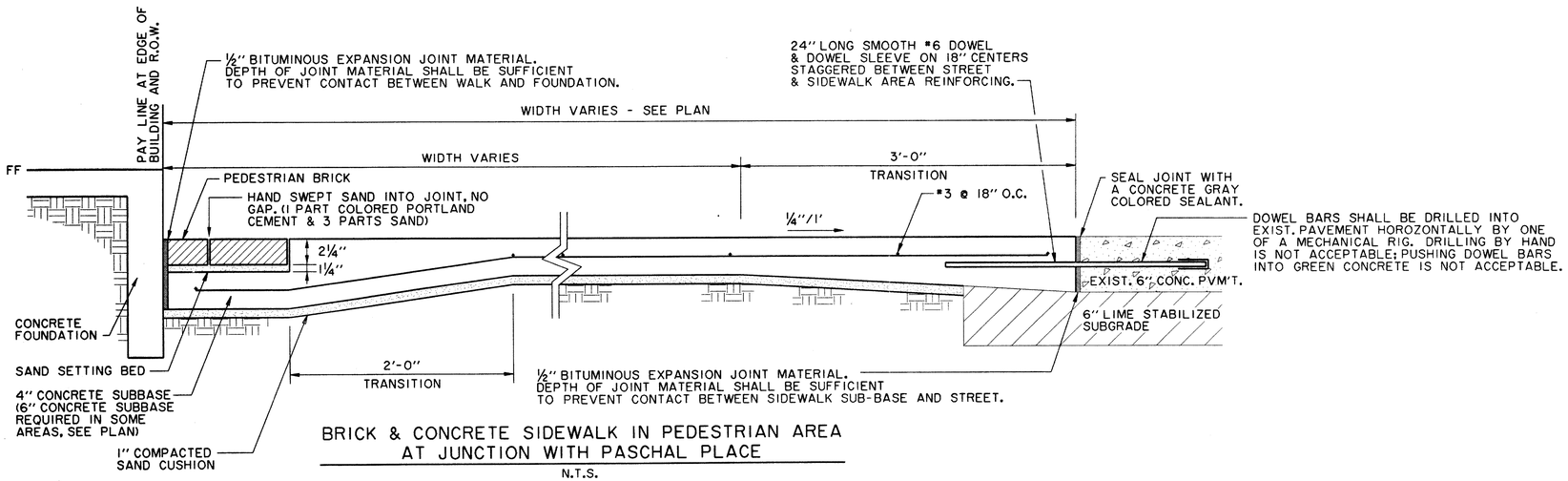

BRICK & CONCRETE SIDEWALK IN PEDESTRIAN AREA AT JUNCTION WITH PASCHAL PLACE

N.T.S.

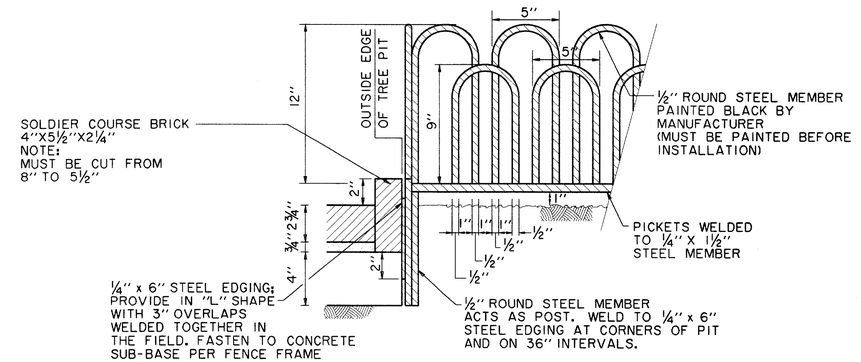

NOTE:
STAGGER SOLDIER COURSE JOINTS FROM RUNNING BOND PATTERN

TREE FENCE MORRIS AVE., ARTIST WAY AND GOODMAN AVE.

N.T.S.

RECORD DRAWING

THE SEAL APPEARING ON THIS DOCUMENT WAS AUTHORIZED BY DAVID E. MEYERS, P.E. 81512

STATE OF TEXAS · DAVID E. MEYERS · 81512 · REGISTERED PROFESSIONAL ENGINEER · 12/18/00

DATE	DESCRIPTION	REF NO.
6/23/99	ISSUED FOR CONSTRUCTION	N/A
5/17/99	ISSUED FOR BID	N/A

STREETSCAPE DETAILS

ADDISON CIRCLE

PHASE II-B PUBLIC INFRASTRUCTURE

TOWN OF ADDISON, TEXAS

Huitt - Zollars, Inc.
3131 Mckinney Ave., Suite 600, Dallas, TX 75204
Phone (214) 871-3311/Fax (214) 871-0757

DESIGN	DRAWN	APPR.	SCALE	DATE	PROJECT NO.	NO.
HZI	HZI	DEM	N.T.S.	MAR. 99	01-1822-50	ST4

h:\proj\01182250\dgn\AUC3TY16.DGN

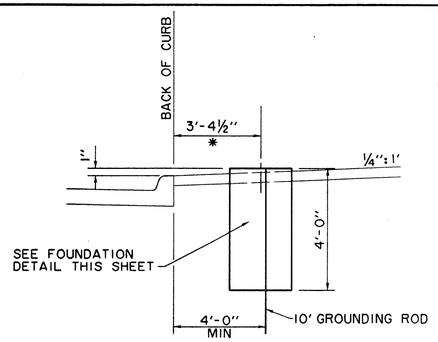

*UNLESS OTHERWISE NOTED IN PLANS

LIGHT FIXTURE PLACEMENT DETAIL
N.T.S.

USE CAUTION WHEN SETTING ANCHOR BOLTS. BOLTS MUST BE VERTICALLY STRAIGHT AND CENTERED ON DIMENSIONS SHOWN.

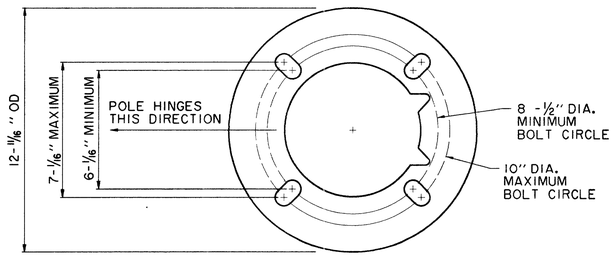

ROUND BOTTOM HINGE BASE ANCHOR BOLT TEMPLATE
N.T.S.

NOTE:
ADEQUATE DRAINAGE MUST BE PROVIDED IN CONCRETE FOUNDATION OR GROUT.

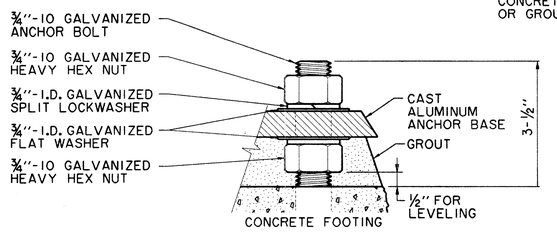

BOLT PROJECTION DETAIL
N.T.S.

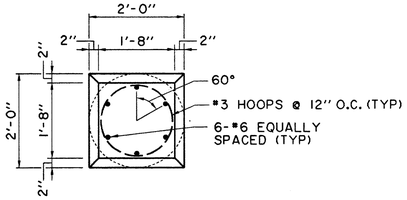

LIGHT FIXTURE FOUNDATION AND CAP PLAN
N.T.S.

STREET LIGHTING NOTES

1. THE STREET LIGHTING FOR THIS PROJECT WILL CONSIST OF INSTALLATION OF 2" PVC CONDUIT, LIGHT POLE BASES, PULL BOXES (HANDHOLES) LIGHT POLES, LUMINAIRES, WIRING AND CONNECTION TO TO POWER SOURCE AS A COMPLETE SYSTEM PER DETAILED SPECIFICATIONS.

2. ALL STREET LIGHTING CONDUIT IS TO BE INSTALLED WITH A MINIMUM OF 24 INCHES OF COVER TO THE TOP OF THE PIPE FROM FINISHED PAVEMENT TO AVOID CONFLICT WITH IRRIGATION LINES WHICH WILL BE AT 12" AND 18" DEPTH. CONDUIT SHOULD BE NO DEEPER THAN 36" TO AVOID CONFLICT WITH OTHER UTILITIES.

3. FOR THE PURPOSES OF COORDINATION, PEDESTRIAN LIGHTS TO BE INSTALLED PER THE STREETSCAPE PLANS FOR THIS PROJECT WILL BE THE FOLLOWING:

   SEE SHEET E21 FOR POLE TYPES.

   THIS POLE WILL BE INSTALLED WITH A 175 WATT METAL HALIDE BEGA 9801 ED-17MH/120V FIXTURE AND LUMINAIRE.

   POLES WILL BE PRIMED AND PAINTED AT THE FACTORY.

4. LOCATIONS OF ANY STREET LIGHTS MAY NOT BE ALTERED WITHOUT PERMISSION FROM THE ENGINEER.

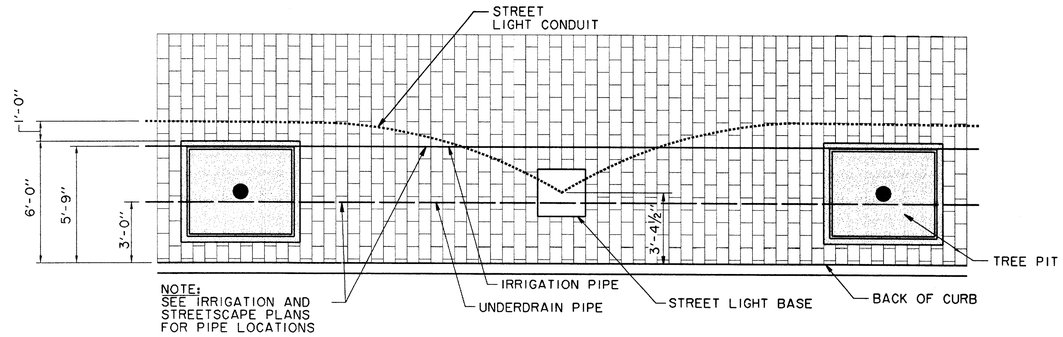

STREE LIGHT CONDUIT DETAIL
CONDUIT SHALL BE DEFLECTED AROUND TREE PIT LOCATIONS - TYPICAL
N.T.S.

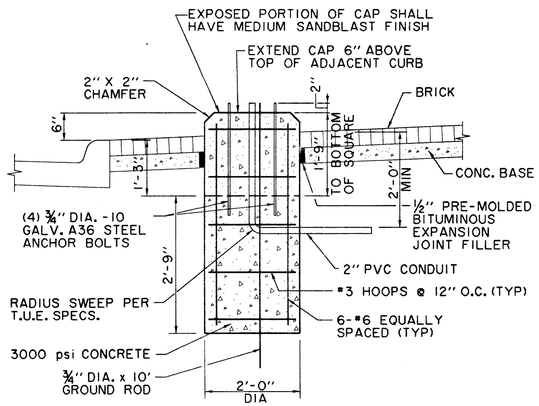

LIGHT FIXTURE FOUNDATION AND CAP SECTION
N.T.S.

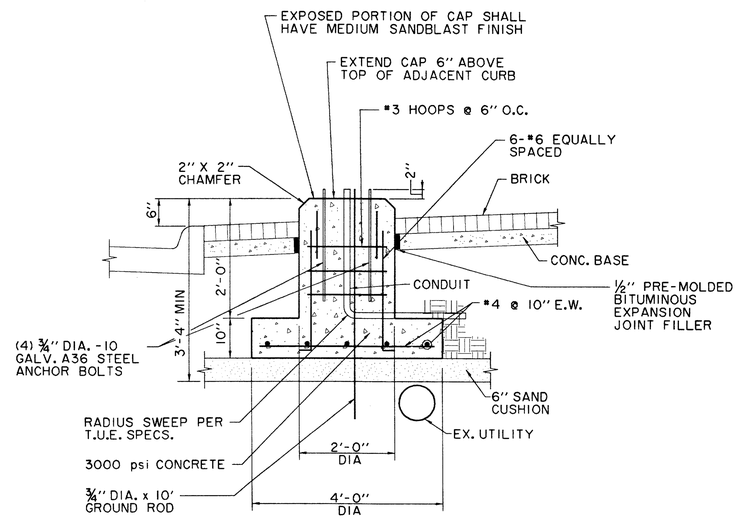

ALTERNATE LIGHT FIXTURE FOOTING AT UTILITY CONFLICT
N.T.S.
(NOT TO BE USED FOR HANGING LIGHT FOUNDATION)

RECORD DRAWING

THE SEAL APPEARING ON THIS DOCUMENT WAS AUTHORIZED BY DAVID E. MEYERS, P.E. 81512

STATE OF TEXAS — DAVID E. MEYERS — 81512 — REGISTERED PROFESSIONAL ENGINEER — 12/18/00

DATE	DESCRIPTION	REF NO.
6/23/99	ISSUED FOR CONSTRUCTION	N/A
5/17/99	ISSUED FOR BID	N/A

LIGHTING DETAILS

ADDISON CIRCLE

PHASE II-B PUBLIC INFRASTRUCTURE

TOWN OF ADDISON, TEXAS

Hurtt - Zollars, Inc.
3131 Mckinney Ave., Suite 600, Dallas, TX 75204
Phone (214) 871-3311/Fax (214) 871-0757

DESIGN	DRAWN	APPR.	SCALE	DATE	PROJECT NO.	NO.
HZI	HZI	DEM	N.T.S.	MAR. 99	01-1822-50	ST5

h:\proj\01182250\dgn\AUC3TY04.DGN

PRF ROTATION=90.000000
Fr:\DUMLLER.RSC
h:\proj\01182250\dgn\AUC3TY04.DGN
Fri Dec 8 14:54:08 2000
\\HOTDOG\E:\HOTDOG\PLOTTING\400M\AUC3TY04.PRF
Hurtt Zollars, Inc.
B_AUC3BLOCK, 4,5,8,13,15,20,23-28,32-34,37-39,43-52,55-61
no ref layout, *no ref name*, *no ref levels*

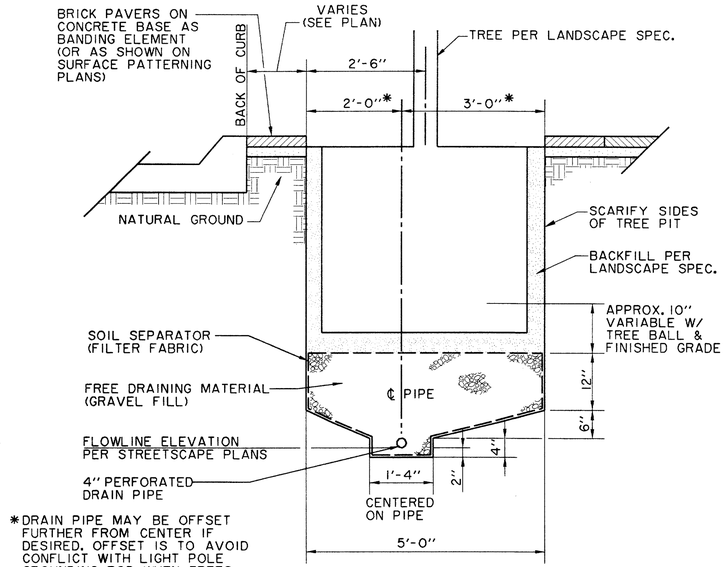

*DRAIN PIPE MAY BE OFFSET FURTHER FROM CENTER IF DESIRED. OFFSET IS TO AVOID CONFLICT WITH LIGHT POLE GROUNDING ROD WHEN TREES ARE IN LINE WITH LIGHTS.

SUBSURFACE DRAIN SYSTEM DETAIL
(SECTION PERPENDICULAR TO CURB)
N.T.S.
(TO BE USED ON ALL TREES UNLESS OTHERWISE NOTED)

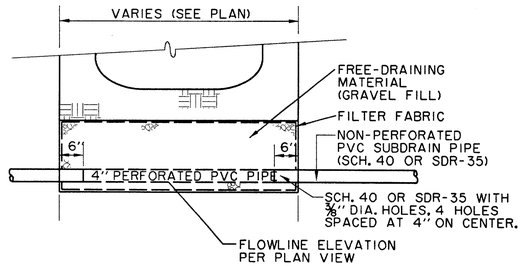

SUBSURFACE DRAIN SYSTEM DETAIL
(SECTION PARALLEL TO CURB)
N.T.S.

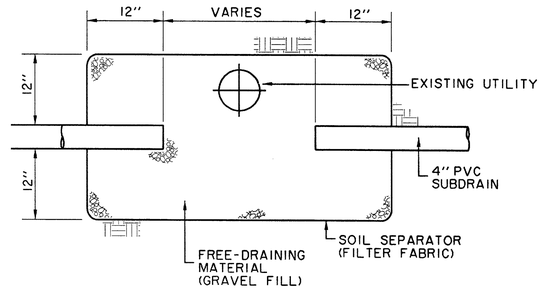

INSTALLATION OF SUBDRAIN
AT UTILITY CONFLICT
N.T.S.

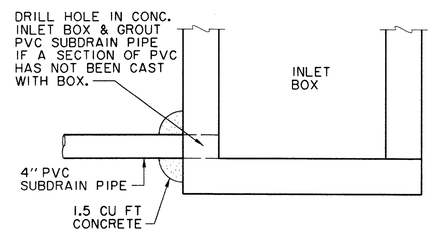

PVC SUBDRAIN PIPE CONNECTION
TO INLET BOX
N.T.S.

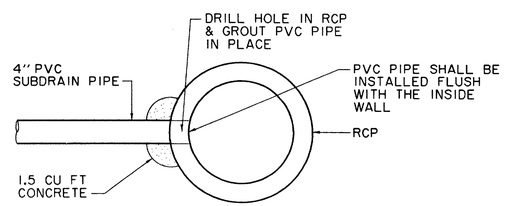

PVC SUBDRAIN PIPE CONNECTION
TO STORM DRAINAGE PIPE
N.T.S.

RECORD DRAWING

THE SEAL APPEARING ON THIS DOCUMENT WAS AUTHORIZED BY DAVID E. MEYERS, P.E. 81512

STATE OF TEXAS
DAVID E. MEYERS
81512
REGISTERED PROFESSIONAL ENGINEER
12/18/00

DATE	DESCRIPTION	REF NO.
6/23/99	ISSUED FOR CONSTRUCTION	N/A
5/17/99	ISSUED FOR BID	N/A

SUBDRAIN DETAILS

ADDISON CIRCLE

PHASE II-B PUBLIC INFRASTRUCTURE

TOWN OF ADDISON, TEXAS

Hulitt - Zollars, Inc.
3131 Mckinney Ave., Suite 600, Dallas, TX 75204
Phone (214) 871-3311/Fax (214) 871-0757

DESIGN	DRAWN	APPR.	SCALE	DATE	PROJECT NO.	NO.
HZI	HZI	DEM	N.T.S.	MAR. 99	01-1822-50	ST6

ADDISON ROAD

NOT IN CONTRACT

N

0 25 50 75 100
SCALE IN FEET

PROPOSED HYDRANT

EXISTING HYDRANT

TOWN OF ADDISON CONFERENCE & THEATRE CENTRE

1-STORY CONCRETE MASONRY BLDG.

METAL CARPORT

TOWN OF ADDISON FUTURE PARKING

AVIS

BARCO MIRROR & GLASS

MEIER VALUE CENTER

BENT TREE AUTO

REGENCY

AUTO HAUS

6+00

7+00

8+00

9+00

10+00

11+00

COURTYARD

RESIDENT PARKING GARAGE 5 LEVELS

ADDISON CIRCLE PHASE III BUILDING "3B"

ADDISON CIRCLE PHASE III BUILDING "3B"

PRIVATE FIRE LANE

FUTURE DEVELOPMENT

8" W

6" WW

1.5" PRIVATE IRRIG.

4" DOM.

6" FIRE

1.5" PUBLIC IRRIG.

18+00 19+00 20+00 21+00 22+00 23+00 24+00 25+00

8" WW

ARTIST WAY

WATER TOWER

EX. 6" WW

COURTYARD

ADDISON CIRCLE PHASE III BUILDING "3A"

MORRIS AVENUE

GOODMAN AVE.

PASCHAL PLACE

FUTURE PARK

FUTURE DEVELOPMENT

FUTURE RESIDENTIAL STREET (R-1)

U.S. POST OFFICE

ADDISON CIRCLE PHASE I EXISTING BUILDING "B"

WITT PLACE

EXISTING BOSQUE PARK

ADDISON CIRCLE PHASE I EXISTING BUILDING "C"

FUTURE MEWS

RECORD DRAWING

THE SEAL APPEARING ON THIS DOCUMENT WAS AUTHORIZED BY DAVID E. MEYERS, P.E. 81512

STATE OF TEXAS
DAVID E. MEYERS
81512
REGISTERED
PROFESSIONAL ENGINEER

DATE	DESCRIPTION	REF NO.
6/23/99	ISSUED FOR CONSTRUCTION	N/A
5/17/99	ISSUED FOR BID	N/A

WATER & WASTEWATER SITE PLAN

ADDISON CIRCLE

PHASE II-B PUBLIC INFRASTRUCTURE

TOWN OF ADDISON, TEXAS

Hyatt - Zollars, Inc.
3131 Mckinney Ave., Suite 600, Dallas, TX 75204
Phone (214) 871-3311/Fax (214) 871-0757

DESIGN	DRAWN	APPR.	SCALE	DATE	PROJECT NO.	NO.
HZI	HZI	DEM	1"=50'	MAR. 99	01-1822-50	WI

h:\proj\01182250\dgn\AUC3SP05.DGN

h:\proj\01182250\dgn\AUC3SP05.DGN
Fri Dec 8 14:36:31 2000
\\RADIAL4\DEVPLOT1\HP4000N\AUC3SP05.PRF
Hyatt-Zollars, Inc.

PRF ROTATION=0.0000000
FLYOUTWELLER.TBL

h:\proj\01182250\dgn\AUC3SP05.DGN
u:\AUC3UTIL.DGN,10-18,31
u:\AUC3UTIL.DGN,20-24,30-34
P:\AUC3B4SE.DGN,1,3,11,18-18,20-25,27-31,34,36,39,44,45
P:\AUC3PAVE.DGN,1,3,5,7,9,11,13,15,17,19,21,23,25,27,29,31,33,35,37,39,41,43,45,47,49,51,53,55,57,59,61
B:\AUC3BDGN,1,3,5,20,50,54,59-61

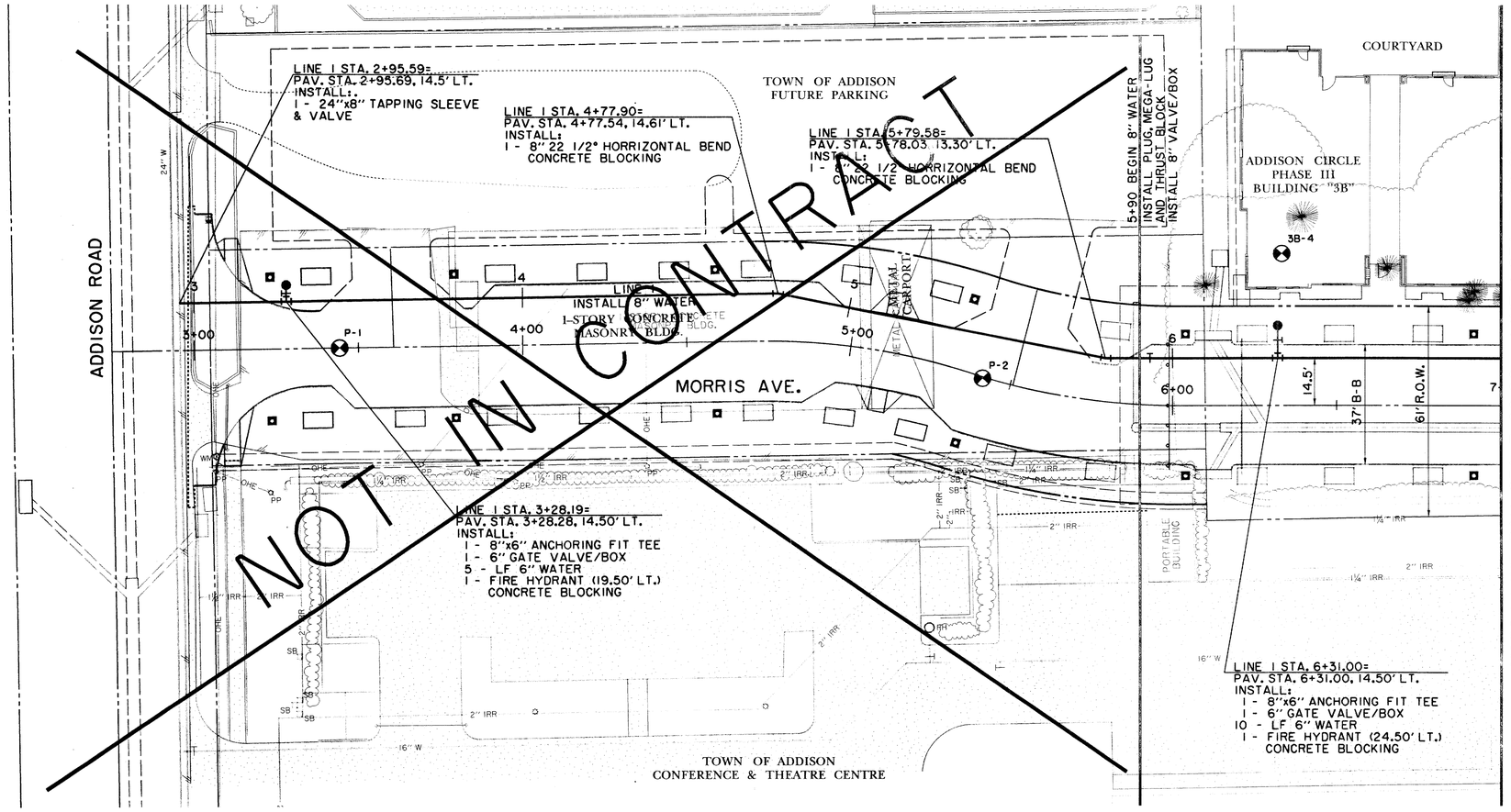

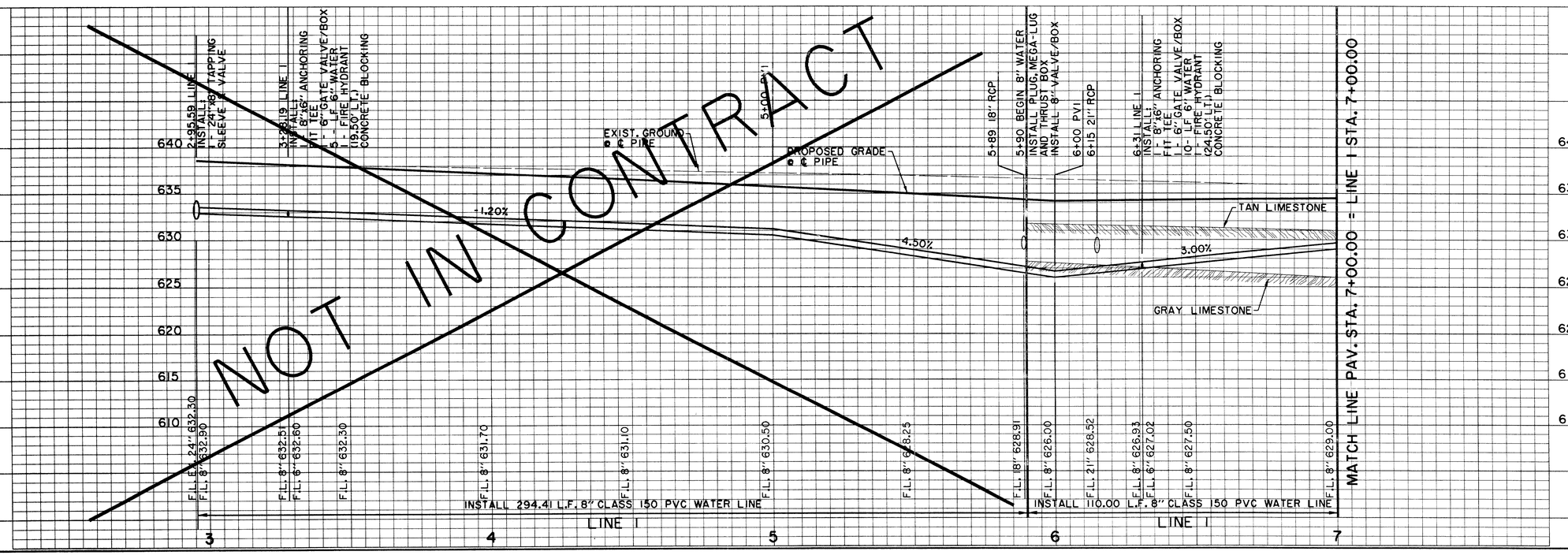

RECORD DRAWING

BENCHMARKS:

BM#5
"D" CUT ON 8' INLET ON NORTH CURB LINE OF GOODMAN AVE. ±75' EAST OF PASCHAL PLACE.
ELEV. 629.98

BM#6
"D" CUT AT ℄ OF 8' INLET AT THE SOUTHWEST CORNER OF MORRIS AVE. AND WITT PLACE.
ELEV. 627.29

BM#7
"D" CUT AT WEST CORNER OF ADDISON THEATRE CENTRE PARKING LOT, SECOND ENTRANCE NORTH OF ADDISON RD.
ELEV. 637.66

THE SEAL APPEARING ON THIS DOCUMENT WAS AUTHORIZED BY DAVID E. MEYERS, P.E. 81512

STATE OF TEXAS · DAVID E. MEYERS · 81512 · REGISTERED PROFESSIONAL ENGINEER · 12/15/00

DATE	DESCRIPTION	REF NO.
6/23/99	ISSUED FOR CONSTRUCTION	N/A
5/17/99	ISSUED FOR BID	N/A

WATER PLAN & PROFILE
LINE 1 - MORRIS AVE.

ADDISON CIRCLE
PHASE II-B PUBLIC INFRASTRUCTURE

TOWN OF ADDISON, TEXAS

Hulitt - Zollars, Inc.
3131 Mckinney Ave., Suite 600, Dallas, TX 75204
Phone (214) 871-3311/Fax (214) 871-0757

DESIGN	DRAWN	APPR.	SCALE	DATE	PROJECT NO.	NO.
HZI	HZI	DEM	H: 1"=20' V: 1"=6'	MAR. 99	01-1822-50	W2

h:\proj\01182250\dgn\AUC3WT01.DGN

PW ROTATION=90.920000
Fr:\sh\MILLER.TBL
h:\proj\01182250\dgn\AUC3WT01.DGN
Fri Dec 8 14:37:08 2000
\\HZDALLAS2\01850\PLOTTING\400MA-AUC3WT01.PRF
Hulitt-Zollars, Inc.
BL:AUC3BORD.DGN;-1,0,0,45.00,0.00,0.00,39.39,33.33,0.63
FL:AUC3BORD.DGN;-1,0,0,45.00,0.00,0.00,39.39,33.33,0.63
TL:AUC3TOPO.DGN;-1,0,0,71.21,-28.31,-46.51,-54.56,57.60,-82
UL:AUC3UTIL.DGN;-1,0,0,45.00,0.00,0.00,39.39,33.33,0.63
TX:AUC3TXT.DGN
no of inputs,*no of comm*,*no of levels*
no of inputs,*no of comm*,*no of levels*
no of inputs,*no of comm*,*no of levels*
no of inputs,*no of comm*,*no of levels*
no of inputs,*no of comm*,*no of levels*

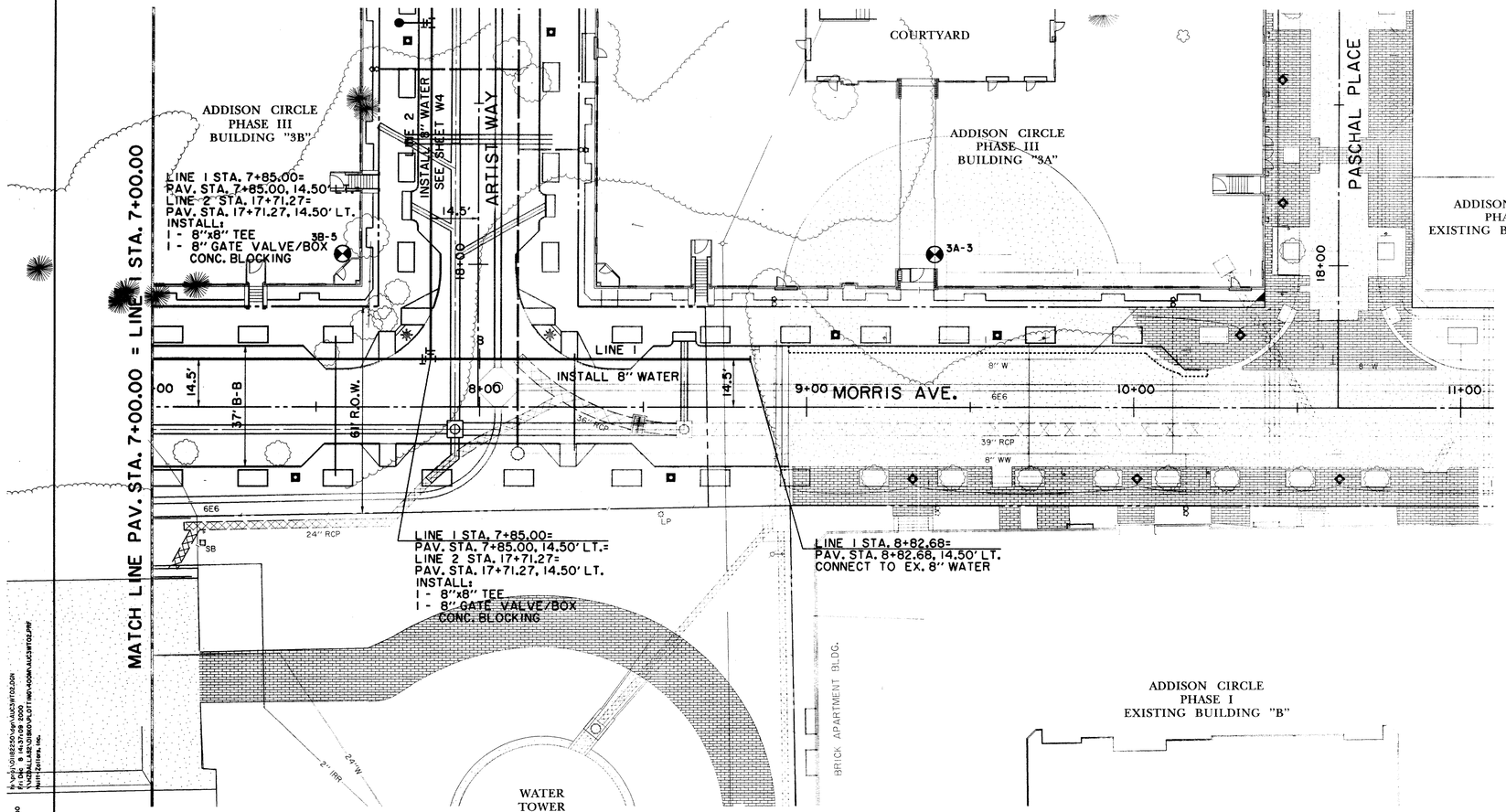

N

0 10 20 30 40
SCALE IN FEET

NOTE: METERS, METER BOXES, VAULT AND BACKFLOW PREVENTION ASSEMBLIES TO BE INSTALLED AND TESTED PER TOWN OF ADDISON GENERAL REQUIREMENTS.

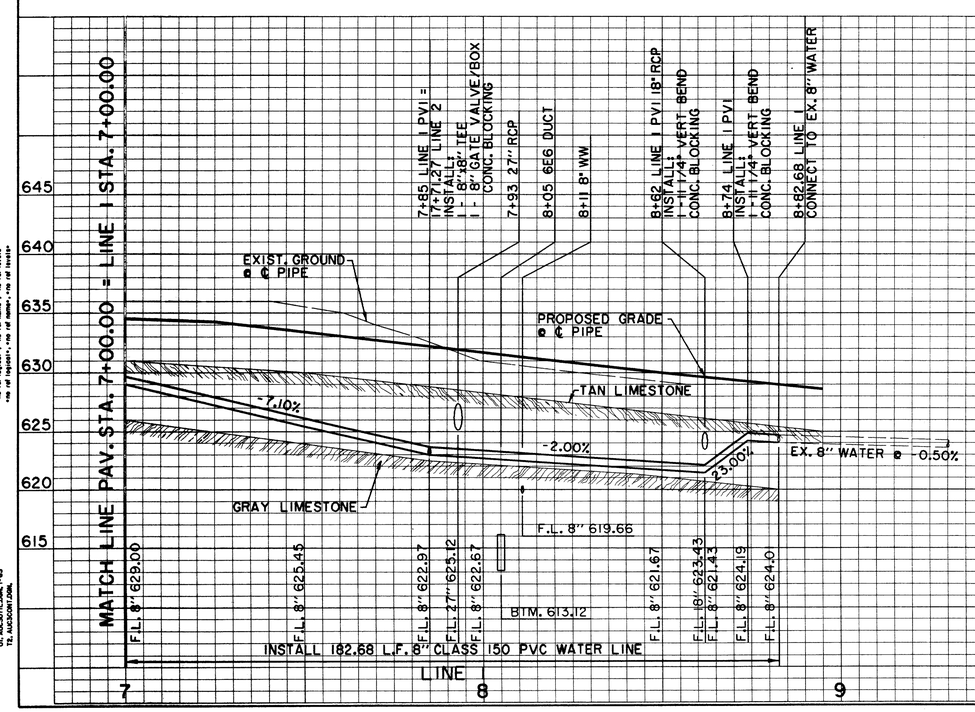

RECORD DRAWING

BENCHMARKS:

BM#5
"□" CUT ON 8' INLET ON NORTH CURB LINE OF GOODMAN AVE. ±75' EAST OF PASCHAL PLACE. ELEV. 629.98

BM#6
"□" CUT AT ℄ OF 8' INLET AT THE SOUTHWEST CORNER OF MORRIS AVE. AND WITT PLACE. ELEV. 627.29

BM#7
"□" CUT AT WEST CORNER OF ADDISON THEATRE CENTRE PARKING LOT, SECOND ENTRANCE NORTH OF ADDISON RD. ELEV. 637.66

THE SEAL APPEARING ON THIS DOCUMENT WAS AUTHORIZED BY DAVID E. MEYERS, P.E. 81512

STATE OF TEXAS · DAVID E. MEYERS 81512 · REGISTERED PROFESSIONAL ENGINEER

DATE	DESCRIPTION	REF NO.
6/23/99	ISSUED FOR CONSTRUCTION	N/A
5/17/99	ISSUED FOR BID	N/A

WATER PLAN & PROFILE
LINE 1 - MORRIS AVE.

ADDISON CIRCLE
PHASE II-B PUBLIC INFRASTRUCTURE

TOWN OF ADDISON, TEXAS

Huitt - Zollars, Inc.
3131 Mckinney Ave., Suite 600, Dallas, TX 75204
Phone (214) 871-3311/Fax (214) 871-0757

DESIGN	DRAWN	APPR.	SCALE	DATE	PROJECT NO.	NO.
HZI	HZI	DEM	H: 1"=20' V: 1"=6'	MAR. 99	01-1822-50	W3

h:\proj\01182250\dgn\AUC3WT02.DGN

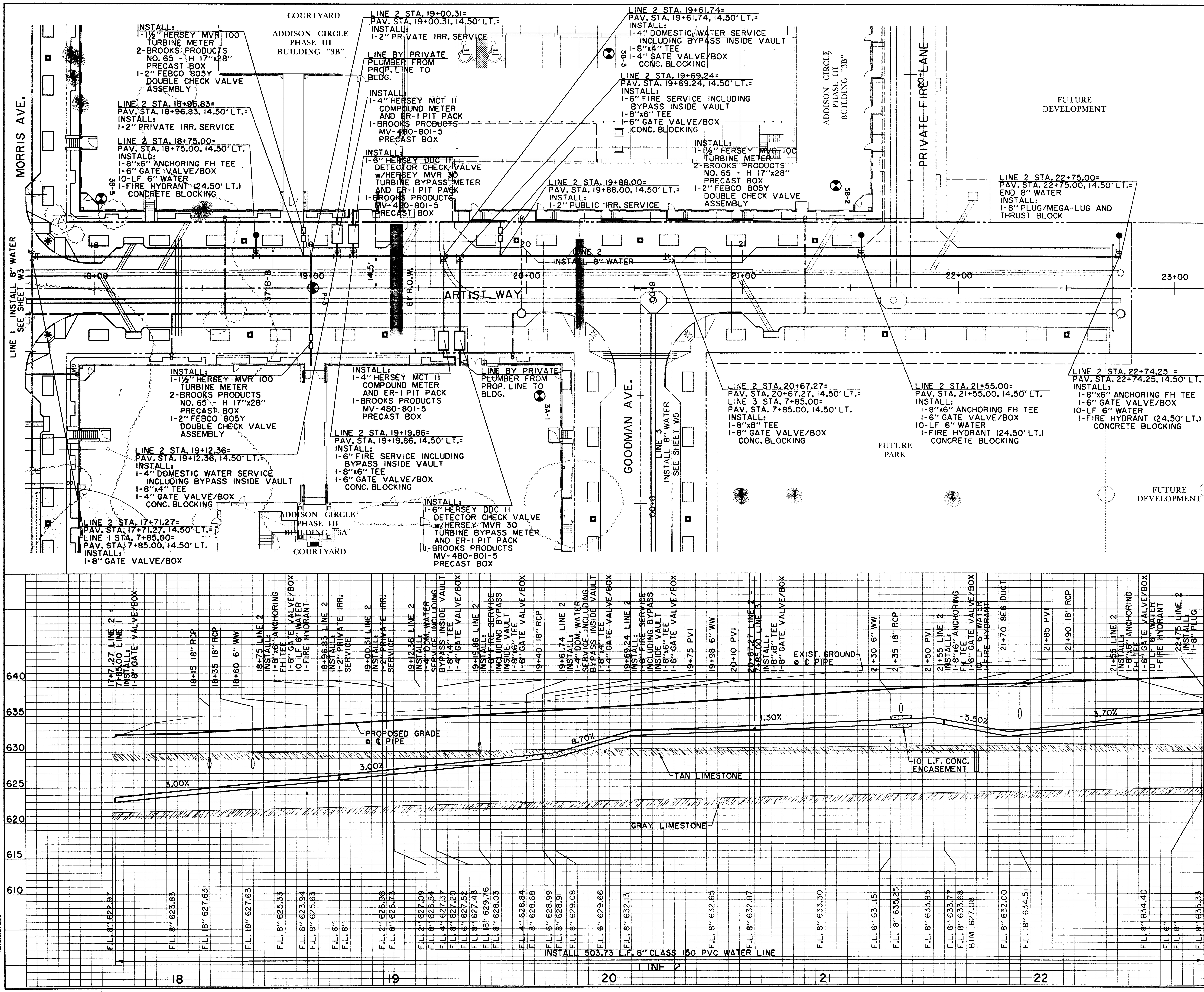

Z

0 10 20 30 40
SCALE IN FEET

NOTE:
1. METERS, METER BOXES, VAULT AND BACKFLOW PREVENTION ASSEMBLIES TO BE INSTALLED AND TESTED PER TOWN OF ADDISON GENERAL REQUIREMENTS.
2. BACKFLOW PREVENTION ASSEMBLY FOR DOMESTIC SERVICE TO BE INSTALLED INSIDE BLDG. BY PRIVATE DEVELOPER.

RECORD DRAWING

BENCHMARKS:

BM#5
"□" CUT ON 8' INLET ON NORTH CURB LINE OF GOODMAN AVE. ±75' EAST OF PASCHAL PLACE.
ELEV. 629.98

BM#6
"□" CUT AT ℄ OF 8' INLET AT THE SOUTHWEST CORNER OF MORRIS AVE. AND WITT PLACE.
ELEV. 627.29

BM#7
"□" CUT AT WEST CORNER OF ADDISON THEATRE CENTRE PARKING LOT, SECOND ENTRANCE NORTH OF ADDISON RD.
ELEV. 637.66

THE SEAL APPEARING ON THIS DOCUMENT WAS AUTHORIZED BY DAVID E. MEYERS, P.E. 81512

STATE OF TEXAS
DAVID E. MEYERS
81512
REGISTERED PROFESSIONAL ENGINEER
12/8/00

DATE	DESCRIPTION	REF NO.
6/23/99	ISSUED FOR CONSTRUCTION	N/A
5/17/99	ISSUED FOR BID	N/A

WATER PLAN & PROFILE
LINE 2 - ARTIST WAY

ADDISON CIRCLE
PHASE II-B PUBLIC INFRASTRUCTURE

TOWN OF ADDISON, TEXAS

Huitt - Zollars, Inc.
3131 Mckinney Ave., Suite 600, Dallas, TX 75204
Phone (214) 871-3311/Fax (214) 871-0757

DESIGN	DRAWN	APPR.	SCALE	DATE	PROJECT NO.	NO.
HZI	HZI	DEM	H: 1"=20' V: 1"=6'	MAR. 99	01-1822-50	W4

h:\proj\01182250\dgn\AUC3WT03.DGN

h:\proj\01182250\dgn\AUC3WT03.DGN
Fri Dec 8 14:37:43 2000
\\HZDALLAS2\DISKO\PLOTTING\400M\AUC3WT03.PRF
Huitt-Zollars, Inc.

PRF ROTATION=0.920000
F:\tbl\MILLER.TBL

B, AUC3BD.DGN, 2-5,8,13,16,20,23-29,32-39,43-53,55-61,63
P1, AUC3BASE.DGN, 1-6,8,11-14,16-18,20,22-24,26-28,31,33,41,42,44-50,56
T1, AUC3TOPO.DGN, 1-9,16,17,21-29,31,46,51-54,56,57,60-62
U1, AUC3UTIL.DGN, 1-63
T2, AUC3CONT.DGN,

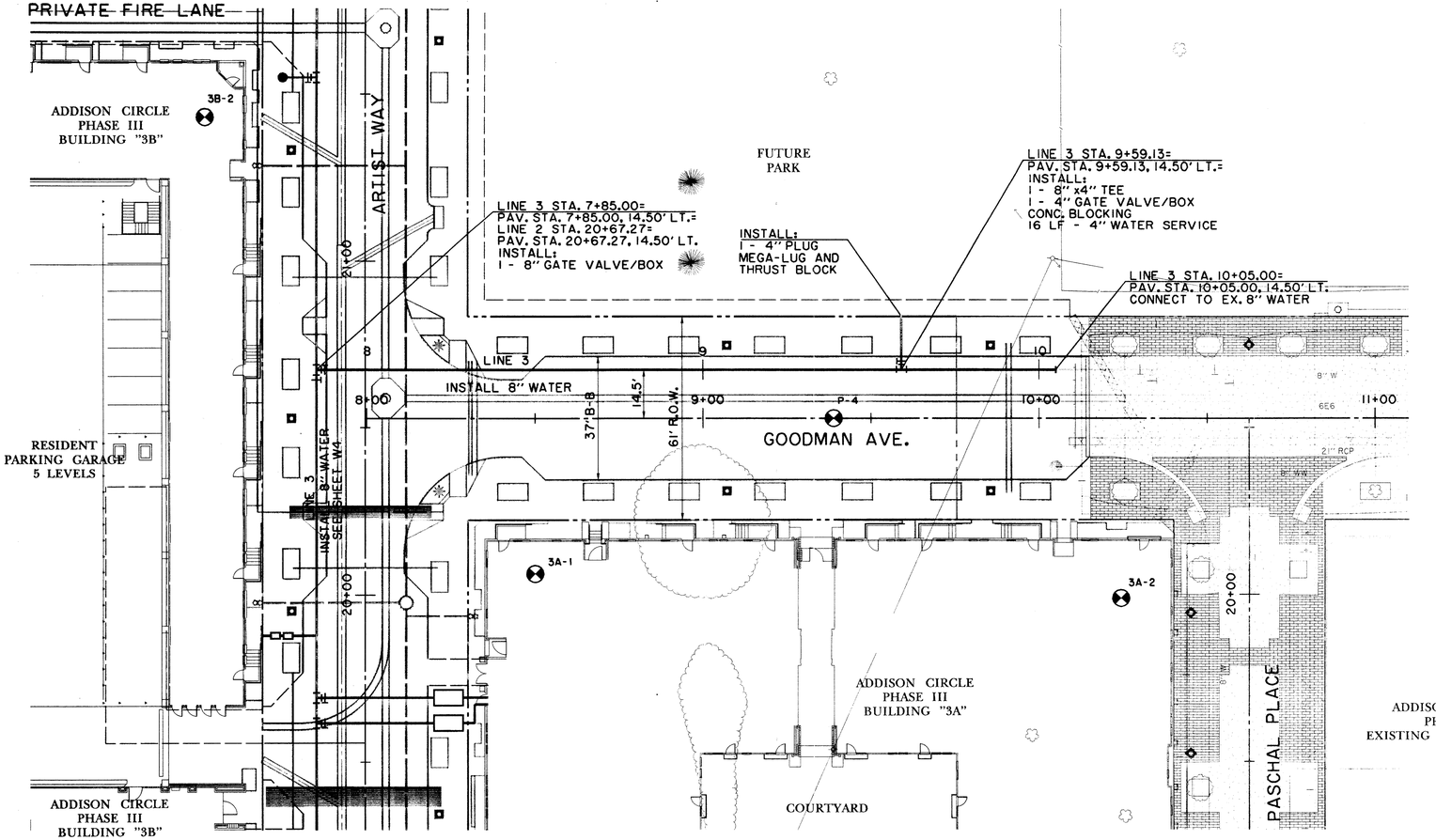

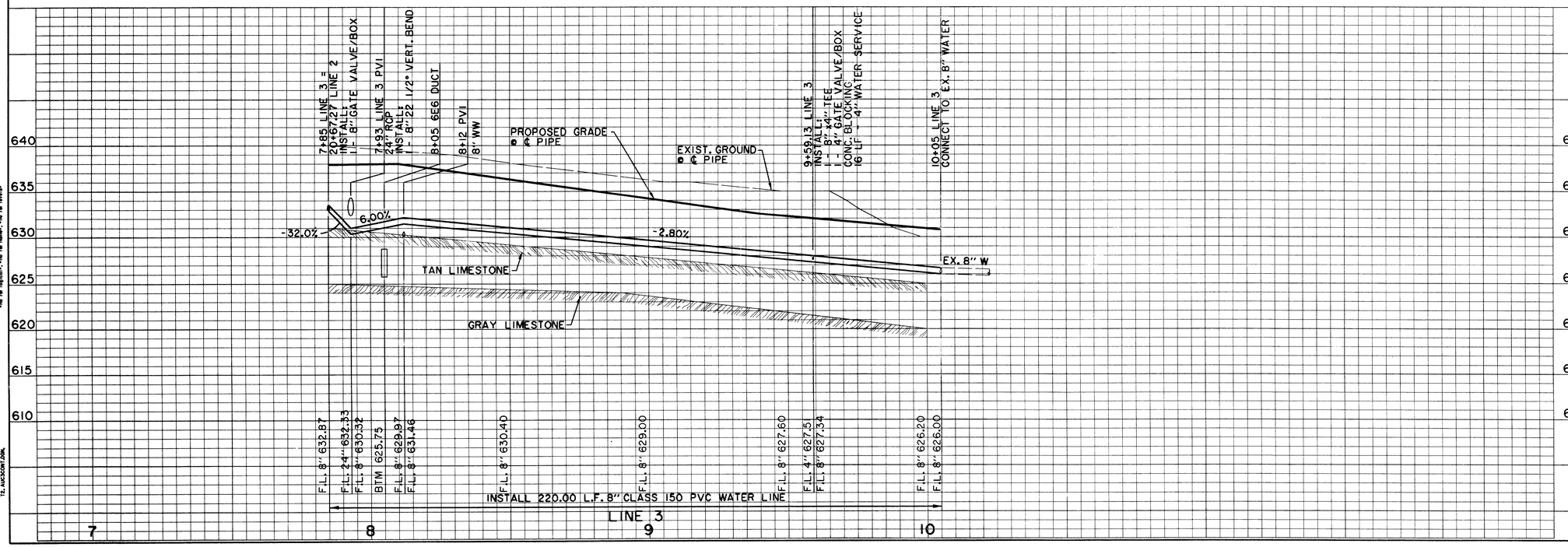

NOTE: METERS, METER BOXES, VAULT AND BACKFLOW PREVENTION ASSEMBLIES TO BE INSTALLED AND TESTED PER TOWN OF ADDISON GENERAL REQUIREMENTS.

RECORD DRAWING

BENCHMARKS:

BM#5
"□" CUT ON 8' INLET ON NORTH CURB LINE OF GOODMAN AVE. ±75' EAST OF PASCHAL PLACE.
ELEV. 629.98

BM#6
"□" CUT AT ℄ OF 8' INLET AT THE SOUTHWEST CORNER OF MORRIS AVE. AND WITT PLACE.
ELEV. 627.29

BM#7
"□" CUT AT WEST CORNER OF ADDISON THEATRE CENTRE PARKING LOT, SECOND ENTRANCE NORTH OF ADDISON RD.
ELEV. 637.66

THE SEAL APPEARING ON THIS DOCUMENT WAS AUTHORIZED BY DAVID E. MEYERS, P.E. 81512

STATE OF TEXAS · DAVID E. MEYERS · 81512 · REGISTERED PROFESSIONAL ENGINEER · 12/8/99

DATE	DESCRIPTION	REF NO.
6/23/99	ISSUED FOR CONSTRUCTION	N/A
5/17/99	ISSUED FOR BID	N/A

WATER PLAN & PROFILE
LINE 3 - GOODMAN AVE.

ADDISON CIRCLE
PHASE II-B PUBLIC INFRASTRUCTURE

TOWN OF ADDISON, TEXAS

Huitt - Zollars, Inc.
3131 Mckinney Ave., Suite 600, Dallas, TX 75204
Phone (214) 871-3311 Fax (214) 871-0757

DESIGN	DRAWN	APPR.	SCALE	DATE	PROJECT NO.	NO.
HZI	HZI	DEM	H: 1"=20' V: 1"=6'	MAR. 99	01-1822-50	W5

h:\proj\01182250\dgn\AUC3WT04.DGN

PRF RO1(10)=90,920000
F:\lib\MILLER.TBL
h:\proj\01182250\dgn\AUC3WT04.DGN
B: AUC3BD.DGN,2-5A,3,(4.20,23.32)-39.43-55.25-61.63
F: AUC3TOPO.DGN, 1-5A,1,(4.20,23.32)-39.43-55.25-61.63,42.44-50.00-57.80-62
U: AUC3UTIL.DGN, 1-63
T2: AUC3SUR.DGN
Huitt-Zollars, Inc.

ADDISON CIRCLE PHASE III BUILDING "3B"

MORRIS AVE.

FUTURE DEVELOPMENT

FUTURE PARK

GOODMAN AVE.

ADDISON CIRCLE PHASE II BUILDING "3A"

ARTIST WAY

LINE 'A'
8" WW

PRIVATE PLUMBER TO EXTEND LINE FROM DOUBLE CLEANOUT TO BUILDING F.L.=6" 624.24

PRIVATE PLUMBER TO EXTEND LINE FROM DOUBLE CLEANOUT TO BUILDING F.L.=6" 630.08

PRIVATE PLUMBER TO EXTEND LINE FROM DOUBLE CLEANOUT TO BUILDING F.L.=6" 631.51

PRIVATE PLUMBER TO EXTEND LINE FROM DOUBLE CLEANOUT TO BUILDING F.L.=6" 622.73

PRIVATE PLUMBER TO EXTEND LINE FROM DOUBLE CLEANOUT TO BUILDING F.L.=6" 629.24

CONSTRUCT 8" WASTEWATER

1+00.00 LINE 'A' MORRIS AVE. = ℄ PAV. STA. 8+11.60, 14.50' RT.
CONN. TO EX. 4' M.H.
EX. RIM=629.70
ADJUST RIM TO 631.82

1+93.56 LINE 'A'
CONST. 6" WW LATERAL W/2-WAY CLEANOUT & CAP

2+18.31 LINE 'A'
CONST. 6" WW LATERAL W/2-WAY CLEANOUT & CAP

3+50.00 LINE 'A'
CONST. 6" WW LATERAL W/2-WAY CLEANOUT & CAP

3+55.43 LINE 'A' = ℄ PAV. 19+97.70, 12.10' RT.
CONST. STD. 4' DIA. M.H.
RIM=637.56
CONST. 6" WW LATERAL W/2-WAY CLEANOUT & CAP

4+86.63 LINE 'A'
CONST. 6" WW LATERAL W/2-WAY CLEANOUT & CAP

10 L.F. CONC. ENCASEMENT

6+32.73 LINE 'A' ARTIST WAY = ℄ PAV. STA. 22+75.00, 12.10' RT.
CONST. STD. 4' DIA. M.H.
RIM=641.06

6+37.73
END & PLUG 8"
FL 632.29

N

0 10 20 30 40
SCALE IN FEET

RECORD DRAWING

1+00.00 LINE 'A'
CONN. TO EX. 4' M.H.
EX. RIM=629.70
ADJUST RIM TO 631.82

1+08+/- LINE 'A'
EX. 24" STM
TO BE REMOVED

1+21+/- LINE 'A'
EX. 6"ϕ

1+29+/- LINE 'A'
PROP. 8" W/R

1+70+/- LINE 'A'
PROP. 18" STM

1+83.56 LINE 'A'
CONST. 6" WW LATERAL

2+18.31 LINE 'A'
CONST. 6" WW LATERAL

2+58+/- LINE 'A'
PROP. 1.5" W/R

3+19+/- LINE 'A'
PROP. 4" W/R

3+27+/- LINE 'A'
PROP. 6" W/R

3+50.00 LINE 'A'
CONST. 6" WW LATERAL

3+55.43 LINE 'A'
CONST STD. 4' DIA M.H.
RIM=637.36

4+17+/- LINE 'A'
PROP. 6"ϕ

4+25+/- LINE 'A'
PROP. 8" W/R

4+65+/- LINE 'A'
PROP. 18" STM

4+86.63 LINE 'A'
CONST. 6" WW LATERAL

6+32.73 LINE 'A'
CONST STD. 4' DIA M.H.
RIM=641.06

PROP GRADE ℄ ℄ PIPE

TAN LIMESTONE

GRAY LIMESTONE

8" PVC ON 3.95%

8" PVC ON 1.0%

10 L.F. CONC. ENCASEMENT

F.L. 8" (IN) 618.93 N
F.L. EX. 8" (OUT) 618.12 E
F.L. 24" 623.65
BITM 613.00
F.L. 8" 622.45
F.L. 8" 620.91
F.L. 18" 627.05
F.L. 8" 622.62
F.L. 6" 622.70
F.L. 8" 622.88
F.L. 8" 623.50
F.L. 6" 623.68
F.L. 8" 624.86
F.L. 1.5" 627.10
F.L. 8" 626.83
F.L. 4" 629.10
F.L. 6" 629.03
F.L. 8" 628.80
F.L. 6" 628.88
F.L. 8" 628.80
F.L. 8" (OUT) 629.02
F.L. 6" (IN) 629.27
F.L. 8" (IN) 629.27
F.L. 8" 629.72
BITM 625.71
F.L. 8" 625.63
F.L. 8" 630.22
F.L. 18" 633.50
F.L. 8" 630.59
F.L. 6" 630.67
F.L. 8" 630.72
F.L. 8" 631.22
F.L. 8" 631.72
F.L. 8" 632.04
F.L. 8" 632.24

CONSTRUCT 532.72 8" PVC SDR 35 WASTEWATER LINE 'A'

1+00 2+00 3+00 4+00 5+00 6+00

605 610 615 620 625 630 635 640 645

BENCHMARKS:

BM#5
"□" CUT ON 8' INLET ON NORTH CURB LINE OF GOODMAN AVE. ±75' EAST OF PASCHAL PLACE.
ELEV. 629.98

BM#6
"□" CUT AT ℄ OF 8' INLET AT THE SOUTHWEST CORNER OF MORRIS AVE. AND WITT PLACE.
ELEV. 627.29

BM#7
"□" CUT AT WEST CORNER OF ADDISON THEATRE CENTRE PARKING LOT, SECOND ENTRANCE NORTH OF ADDISON RD.
ELEV. 637.66

THE SEAL APPEARING ON THIS DOCUMENT WAS AUTHORIZED BY DAVID E. MEYERS, P.E. 81512

STATE OF TEXAS · DAVID E. MEYERS · 81512 · REGISTERED PROFESSIONAL ENGINEER · 12/13/00

DATE	DESCRIPTION	REF NO.
6/23/99	ISSUED FOR CONSTRUCTION	N/A
5/17/99	ISSUED FOR BID	N/A

WASTEWATER PLAN & PROFILE
LINE A - STA. 1+00.00 TO STA. 6+32.73

ADDISON CIRCLE
PHASE II-B PUBLIC INFRASTRUCTURE

TOWN OF ADDISON, TEXAS

Huitt - Zollars, Inc.
3131 Mckinney Ave., Suite 600, Dallas, TX 75204
Phone (214) 871-3311/Fax (214) 871-0757

DESIGN	DRAWN	APPR.	SCALE	DATE	PROJECT NO.	NO.
HZI	HZI	DEM	H: 1"=20' V: 1"=6'	MAR. 99	01-1822-50	WWI

h:\proj\01182250\dgn\AUC3WW01.DGN

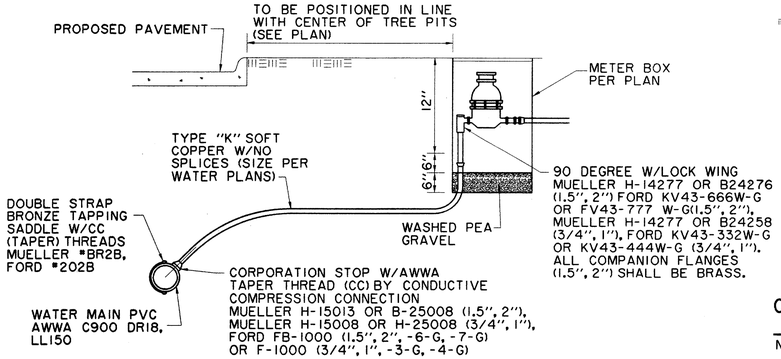

NOTE:

THE TAPPING SADDLE AND CORPORATION STOP MUST BE POLY-WRAPPED (8 MIL) AND HAND BACKFILLED WITH SAND TO A DEPTH OF 12". CAUTION !! INSPECTION MUST BE CALLED FOR AND COMPLETED PRIOR TO BACKFILL OR TAP MUST BE RE-EXPOSED BY THE CONTRACTOR FOR INSPECTION BY THE TOWN.

TYPICAL WATER SERVICE DETAIL UP TO 2" METER

N.T.S.

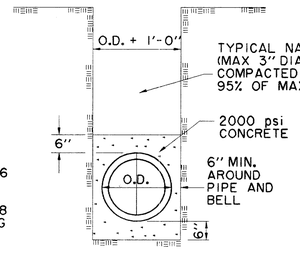

CONCRETE ENCASEMENT WATER MAIN

N.T.S.

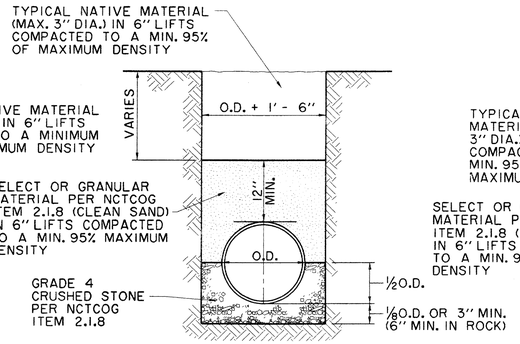

RCCP WATERLINE EMBEDMENT

N.T.S.

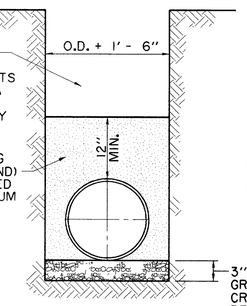

C.I. OR D.I. PIPE

N.T.S.

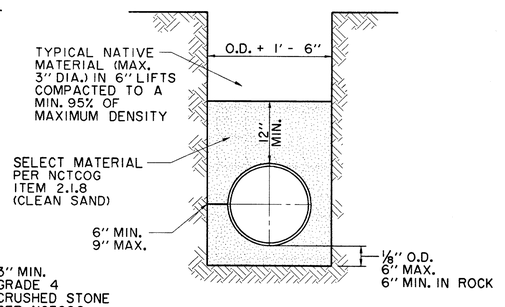

P.V.C. EMBEDMENT

N.T.S.

FIRE HYDRANT TO BE "MUELLER" TRAFFIC MODEL W/6" MECHANICAL JOINT CONNECTION OR APPROVED EQUAL W/5¼" VALVE OPENING W/BARREL APPROX. 7" INSIDE DIAMETER. HYDRANT BODY SHALL BE COATED W/2 COATS OF ALUMINUM PAINT OVER TWO COATS OF PRIMER. BONNET TO FLANGE & NOZZLE CAPS SHALL BE PAINTED BY COLOR CODE FOR MAIN SIZE ACCORDING TO CITY STANDARDS. ALL HYDRANTS SHALL BE EQUIPPED WITH A BREAKAWAY FLANGE & SHALL BE NO CLOSER THAN 3' TO ANY SURFACE OBSTRUCTION. (150 psi WORKING PRESSURE - AWWA STD. C-502-73 OR LATEST REVISION) USE "MUELLER CENTURION"

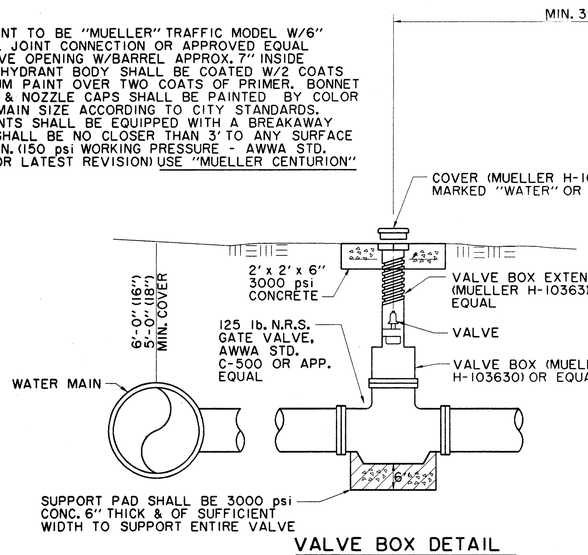

VALVE BOX DETAIL

N.T.S.

(SEE PLANS FOR "MAIN SIZE")

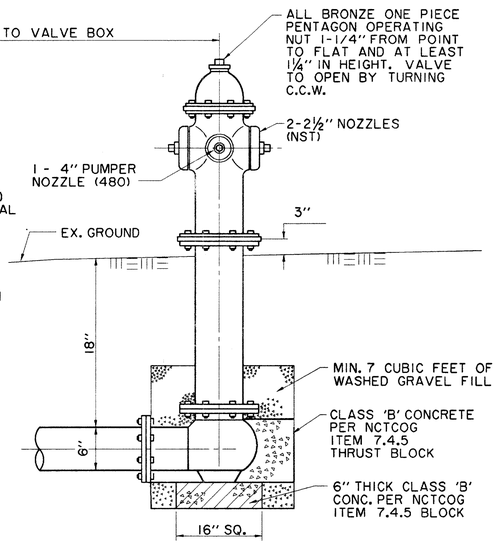

TYPICAL FIRE HYDRANT INSTALLATION

N.T.S.

GENERAL NOTES:

1. ℄ OF F.H. BARREL SHALL BE NOT LESS THAN 6.0' OR MORE THAN 9.0' FROM BACK OF CURB OR EDGE OF DRIVING LANE.
2. DO NOT SET F.H. IN AN EXISTING OR PROPOSED SIDEWALK, UNLESS OTHERWISE NOTED.
3. ALL F.H. TEES SHALL BE M.J. WITH ANCHORING ON THE BRANCH WITH M.J., M.J. 6" VALVE.
4. SET F.H. ON THE LOT LINE EXTENDED WHEN POSSIBLE. (NOT APPLICABLE TO THIS PROJECT)
5. SEE SPECIFICATION FH-95-1 FOR ADDITIONAL REQUIREMENTS.

GATE VALVES AND VALVE BOXES:

1. GATE VALVES SHALL BE IRON BODY, BRONZE OR BRASS MOUNTED, NON-RISING STEM, PARALLEL SEAT TYPE. VALVES SHALL BE OF EQUAL OR GREATER PRESSURE CLASS THAN THE PIPING IN WHICH THEY ARE TO BE INSTALLED.
2. VALVE BOXES SHALL BE CAST IRON AND SHALL BE OF SUFFICIENT LENGTH AND DIAMETER TO OPERATE ALL VALVES BURIED IN THE GROUND. COVERS SHALL BE MARKED ''WATER''. THE BOXES SHALL REST ON THE VALVE AND BE ADJUSTED SO THAT THE COVER MAY SET FLUSH WITH THE FINISHED GRADE.

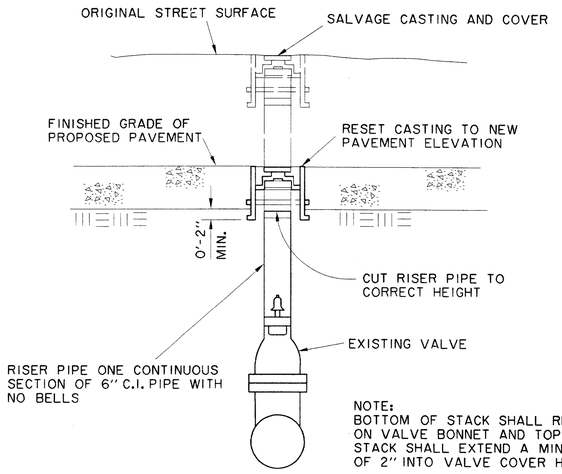

NOTE:
BOTTOM OF STACK SHALL REST ON VALVE BONNET AND TOP OF STACK SHALL EXTEND A MINIMUM OF 2" INTO VALVE COVER HOUSING.

VALVE COVER AND RISER PIPE ADJUSTMENT

N.T.S.

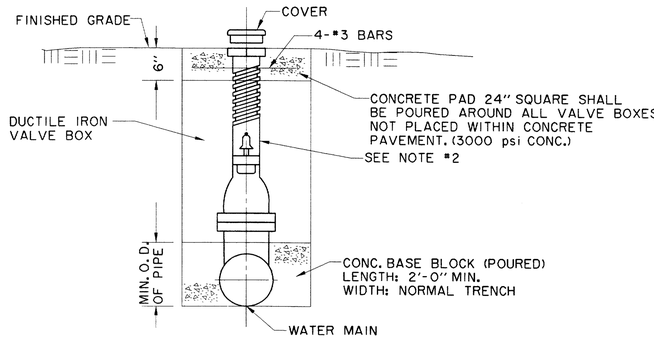

TYPICAL VALVE SETTING AND BOX

N.T.S.

NOTES:

1. GATE VALVES SHALL BE IN ACCORDANCE WITH AWWA STANDARD C-509-80 OR LATEST THEREOF. ALL VALVES SHALL BE ''MUELLER'' OR APPROVED EQUAL.
2. A PERMANENTLY ATTACHED VALVE EXTENSION STEM SHALL BE REQUIRED FOR ANY VALVE ON WHICH THE OPERATING NUT IS LOCATED IN EXCESS OF 4 FEET BELOW THE TOP OF VALVE BOX. THIS EXTENSION SHALL BE OF SUFFICIENT LENGTH TO INSURE THAT ITS TOP IS WITHIN 4' OF VALVE BOX LID. MANUFACTURED VALVE STACK DUCTILE IRON PIPE TO BE USED FOR EXTENSION GREATER THAN 4'-0''. BELL END OF STACK TO BE FITTED OVER VALVE. VALVE AND VALVE STACK IS TO BE POLY WRAPED.
3. VALVES SHALL BE OF DUCTILE IRON W/RUBBER ENCAPSULATED DISK. BOLTS SHALL BE STAINLESS STEEL OF SAME SIZE ON EACH VALVE.

RECORD DRAWING

THE SEAL APPEARING ON THIS DOCUMENT WAS AUTHORIZED BY DAVID E. MEYERS, P.E. 81512

STATE OF TEXAS · DAVID E. MEYERS · 81512 · REGISTERED PROFESSIONAL ENGINEER · 12/15/09

DATE	DESCRIPTION	REF NO.
6/23/99	ISSUED FOR CONSTRUCTION	N/A
5/17/99	ISSUED FOR BID	N/A

WATER DETAILS

ADDISON CIRCLE

PHASE II-B PUBLIC INFRASTRUCTURE

TOWN OF ADDISON, TEXAS

Hiatt - Zollars, Inc.
3131 Mckinney Ave., Suite 600, Dallas, TX 75204
Phone (214) 871-3311/Fax (214) 871-0757

DESIGN	DRAWN	APPR.	SCALE	DATE	PROJECT NO.	NO.
HZI	HZI	DEM	N.T.S.	MAR. 99	01-1822-50	W6

h:\proj\01182250\dgn\AUC3TY10.DGN

B:\AUC3BLOCK\A,5,6,13,6,20,23-29,32-34,37-39,43-50,55-61 PRF ROTATION=90.0000000 FX:\NW-MAIL.DGN
h:\proj\01182250\dgn\AUC3TY10.DGN Fri Dec 8 14:36:45 2000 User:DAVE Refs:h:\proj\01182250\dgn\AUC3TY10.DGN
no ref layout, no ref name, no ref levels

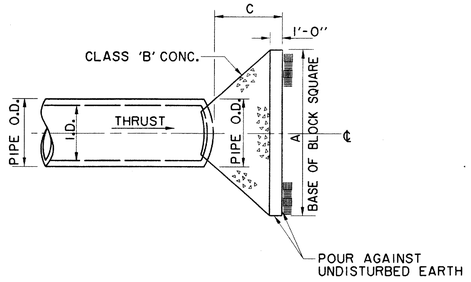

PLAN OF PLUG THRUST BLOCK
N.T.S.

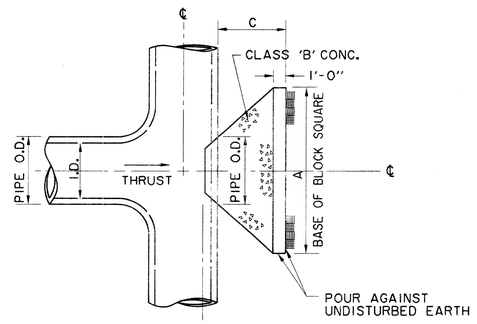

PLAN OF TEE THRUST BLOCK
N.T.S.

			EARTH		ROCK	
I.D. (IN.)	THRUST TONS	C. FT.	A. FT.	VOL. C.Y.	A. FT.	VOL. C.Y.
4, 6, 8	5.1	1.5	2.5	0.3	2.0	0.2
10, 12	11.3	1.5	3.5	0.6	2.5	0.3
16, 18	25.5	2.0	5.5	1.6	4.0	0.9
24	45.2	2.5	7.0	3.1	5.0	1.7

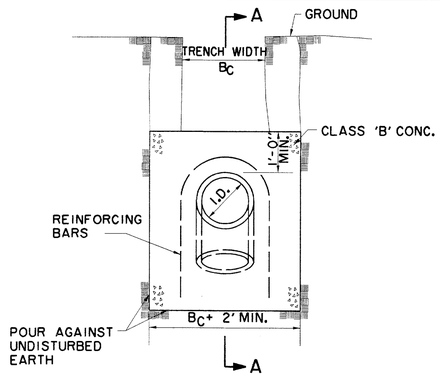

ELEVATION B-B
N.T.S.

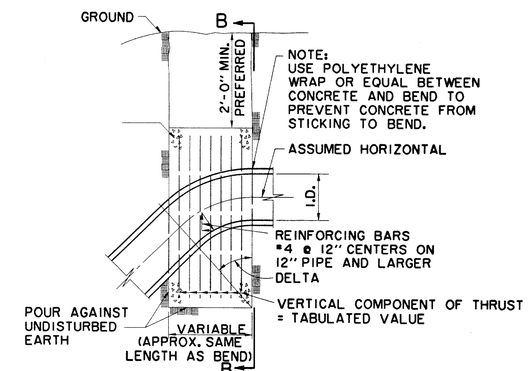

SECTION A-A
N.T.S.

VERTICAL BENDS

	11.25°		22.50°		30°		45°		67.50°		90°		
I.D. (IN.)	THRUST TONS	VOL. C.Y.	THRUST TONS	VOL. C.Y.	THRUST TONS	VOL. C.Y.	THRUST TONS	VOL. C.Y.	THRUST TONS	VOL. C.Y.	THRUST TONS	VOL. C.Y.	I.D. (IN.)
4, 6, 8	1.0	0.5	2.0	1.0	2.5	1.3	3.6	1.8	4.6	2.3	5.0	2.5	4, 6, 8
10, 12	2.2	1.1	4.3	2.2	5.7	2.8	8.0	4.0	10.5	5.2	11.3	5.7	10, 12
16, 18	5.0	2.5	9.7	4.9	12.7	6.4	18.0	9.0	23.5	11.8	25.5	12.7	16, 18
24	8.2	4.4	17.3	8.7	22.6	11.3	32.0	16.0	41.9	20.9	45.2	22.6	24

GENERAL NOTES FOR ALL THRUST BLOCKS

1. ALL CALCULATIONS ARE BASED ON INTERNAL PRESSURE OF 200 P.S.I. FOR 24'' I.D. PIPE AND SMALLER AND 150 P.S.I. ON 30'' I.D. AND LARGER.
2. VOLUMES OF VERTICAL BEND THRUST BLOCKS ARE NET VOLUMES OF CONCRETE TO BE FURNISHED. THE CORRESPONDING WEIGHT OF THE CONCRETE (CLASS F) IS EQUAL TO OR GREATER THAN THE VERTICAL COMPONENT OF THRUST ON THE VERTICAL BEND.
3. WALL THICKNESS (T) ASSUMED HERE FOR ESTIMATING PURPOSES ONLY.
4. CONCRETE FOR BLOCKING SHALL BE CLASS B CONCRETE.
5. DIMENSIONS MAY BE VARIED AS REQUIRED BY FIELD CONDITIONS AND AS DIRECTED BY THE ENGINEER. THE VOLUME OF CONCRETE BLOCKING SHALL NOT BE LESS THAN SHOWN HERE.
6. CONCRETE BLOCKING SHALL BE IN PLACE A MINIMUM OF 4 DAYS PRIOR TO TESTING THE PIPELINE.

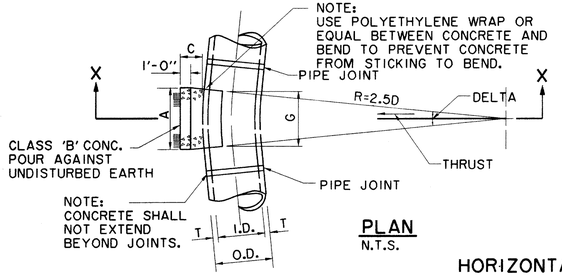

PLAN
N.T.S.

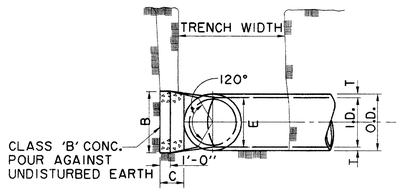

SECTION X-X
N.T.S.

I.D. (IN.)	T. IN.	C 11.25° FT.	C 22.50°+ FT.	E. FT.
4, 6, 8	0.4	1.5	1.5	0.9
10, 12	0.5	1.5	1.5	1.2
16, 18	0.6	1.5	1.5	1.6
24	0.9	1.5	1.5	2.1

HORIZONTAL BENDS

DELTA	11.25°								22.50°								DELTA
			EARTH			ROCK					EARTH			ROCK			
I.D. (IN.)	G. FT.	THRUST TONS	A. FT.	B. FT.	VOL. C.Y.	A. FT.	B. FT.	VOL. C.Y.	G. FT.	THRUST TONS	A. FT.	B. FT.	VOL. C.Y.	A. FT.	B. FT.	VOL. C.Y.	I.D. (IN.)
4, 6, 8	0.4	1.0	1.0	1.5	0.1	1.0	1.0	0.1	0.8	2.0	1.5	1.5	0.1	1.0	1.0	0.1	4, 6, 8
10, 12	0.6	2.2	1.5	1.5	0.1	1.0	1.5	0.1	1.1	4.4	2.0	2.5	0.3	1.5	1.5	0.1	10, 12
16, 18	0.8	5.0	2.0	2.5	0.3	1.5	2.0	0.2	1.6	9.9	3.0	3.5	0.6	2.0	2.5	0.3	16, 18
24	1.1	8.9	3.0	3.5	0.5	1.5	3.0	0.3	2.2	17.7	4.0	4.5	1.0	3.0	3.5	0.5	24
DELTA	45°								90°								DELTA
4, 6, 8	0.4	3.9	2.0	2.0	0.2	1.5	1.5	0.1	0.4	5.0	5.0	1.5	0.4	2.0	2.0	0.2	4, 6, 8
10, 12	0.5	8.7	3.5	2.5	0.5	2.0	2.5	0.3	0.5	6.5	6.5	2.5	1.0	3.5	2.5	0.5	10, 12
16, 18	0.6	19.5	4.5	4.5	1.2	3.0	3.5	0.6	0.6	9.0	9.0	4.0	2.4	4.5	4.0	1.0	16, 18
24	0.9	34.6	8.0	4.5	2.3	4.5	4.0	1.1	0.9	14.5	14.5	4.5	5.0	8.0	4.0	2.1	24

GENERAL NOTES

1. UNPLASTICIZED POLYVINYL CHLORIDE (PVC) WATER PIPE SHALL MEET OR EXCEED REQUIREMENTS OF AWWA C900 PVC PIPE WITH CAST IRON OUTSIDE DIMENSIONS. PIPE SHALL BE LISTED BY UNDERWRITER LABORATORIES AND SHALL BE APPROVED FOR USE IN CITIES AND TOWNS OF THE STATE OF TEXAS BY THE STATE BOARD OF INSURANCE.

2. PVC WATER PIPE SHALL BE FURNISHED WITH A RUBBER RING AT EACH JOINT AND AN INTEGRAL THICKENED BELL AS A PART OF EACH JOINT. THE PIPE CLASS SHALL BE MINIMUM CLASS 150 DR 18 WHICH REFERS TO THE MAXIMUM HYDROSTATIC PRESSURE IN NORMAL OPERATIONS. LAYING LENGTHS SHALL BE 20 FEET+/-. PIPE AND FITTINGS MUST BE ASSEMBLED WITH A NONTOXIC LUBRICANT.

3. FITTINGS FOR PVC WATER PIPE SHALL BE GRAY IRON OR DUCTILE IRON OF THE BELL AND SPIGOT, OR MECHANICAL JOINT TYPE AND SHALL BE CLASS 250 IN ACCORDANCE WITH AWWA C110-77 (ANSI.10).

4. UNLESS OTHERWISE SPECIFIED ON PLANS OR SHOWN IN PROFILES, PVC WATER PIPE SHALL BE INSTALLED TO CLEAR ALL UTILITY LINES AND SHALL HAVE A MINIMUM COVER OF 36 INCHES BELOW THE LOWEST GRADE OF THE STREET AS PER CITY CODE.

5. 4''-12'' R S GATE VALVES SHALL BE IN ACCORDANCE WITH AWWA STANDARD C-500.

6. A PERMANENTLY ATTACHED VALVE EXTENSION STEM SHALL BE REQUIRED FOR ANY VALVE WHOSE OPERATING NUT IS LOCATED IN EXCESS OF 4 FEET BELOW THE TOP OF VALVE BOX. THIS EXTENSION SHALL BE OF SUFFICIENT LENGTH TO INSURE THAT ITS TOP IS WITHIN 4' OF VALVE BOX LID.

7. DUCTILE IRON OR C-900 PVC PIPE SHALL BE USED FOR VALVE STACKS WITH VALVE BOX CASTING.

RECORD DRAWING

THE SEAL APPEARING ON THIS DOCUMENT WAS AUTHORIZED BY DAVID E. MEYERS, P.E. 81512

STATE OF TEXAS
DAVID E. MEYERS
81512
REGISTERED
PROFESSIONAL ENGINEER
12/13/00

DATE	DESCRIPTION	REF NO.
6/23/99	ISSUED FOR CONSTRUCTION	N/A
5/17/99	ISSUED FOR BID	N/A

WATER DETAILS

ADDISON CIRCLE

PHASE II-B PUBLIC INFRASTRUCTURE

TOWN OF ADDISON, TEXAS

Huitt - Zollars, Inc.
3131 Mckinney Ave., Suite 600, Dallas, TX 75204
Phone (214) 871-3311 Fax (214) 871-0757

DESIGN	DRAWN	APPR.	SCALE	DATE	PROJECT NO.	NO.
HZI	HZI	DEM	N.T.S.	MAR. 99	01-1822-50	W7

h:\proj\01182250\dgn\AUC3TY05.DGN

PRF ROTATION=90.000000
F:\ISH\MILLER.TBL
H:\proj\01182250\dgn\AUC3TY05.DGN
Huitt-Zollars, Inc.

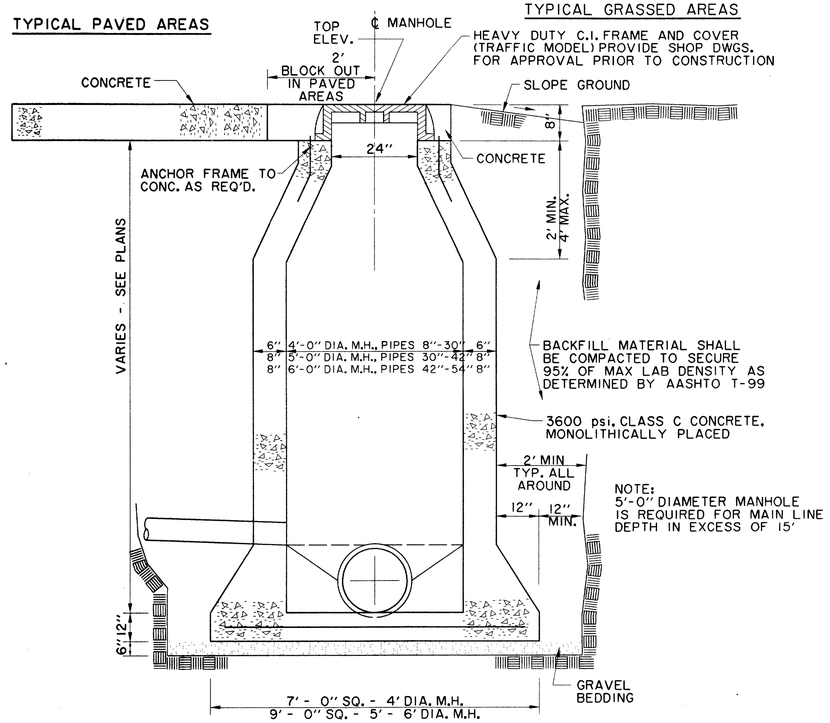

CAST IN PLACE MANHOLE

WHERE DROP M.H. IS REQUIRED, USE INSIDE DROP CONNECTION AS PER TOWN OF ADDISON STANDARDS.

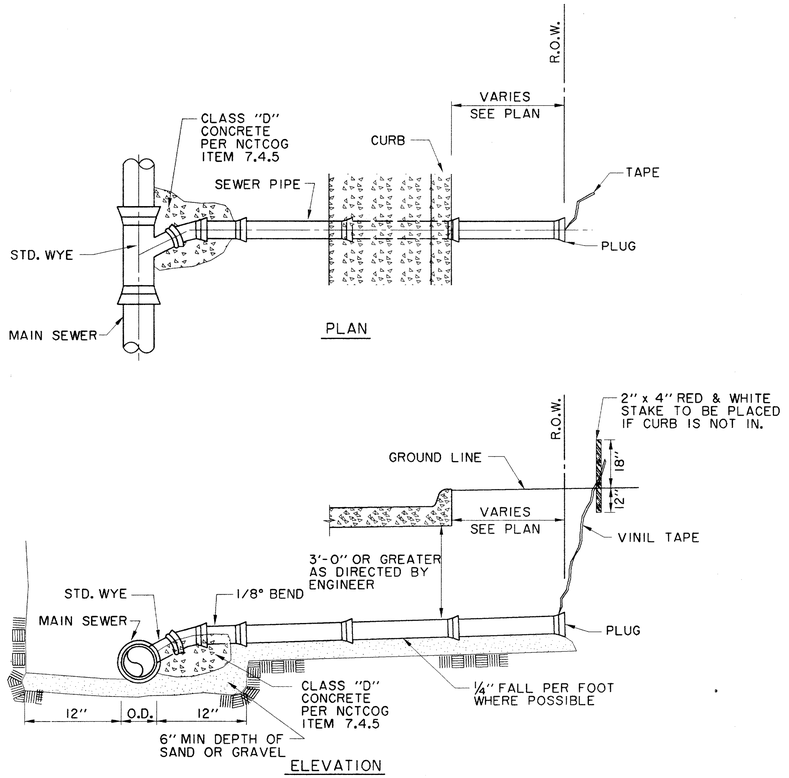

SANITARY SEWER SERVICE CONNECTION

NTS

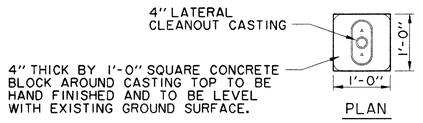

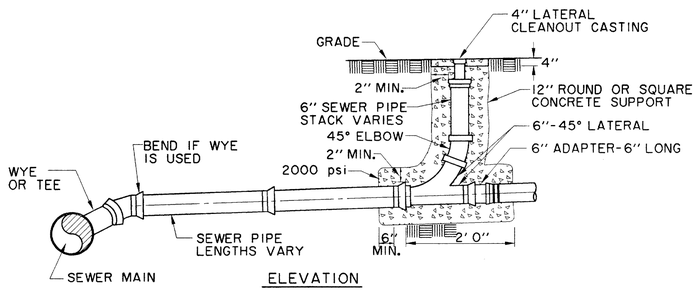

SANITARY SEWER CLEANOUT DETAIL

NTS

PVC SANITARY SEWER PIPE TO BE SDR 35 OR SDR 26 (AS NOTED ON PLANS) WITH INTEGRAL BELL. IT SHALL BE THE RESPONSIBILITY OF THE CONTRACTOR TO FIELD LOCATE HORIZONTALLY EACH SERVICE IN RELATION TO THE SANITARY SEWER STATIONING.

FIELD TIES ARE TO BE INCLUDED AND RECORDED ON ALUMINIZED SANITARY SEWER TAPE. THIS TAPE, GEEN OR RED IN COLOR IS TO BE ATTACHED TO THE 6" SERVICE AT THE R.O.W. LINE AND BROUGHT TO THE SURFACE TO BE USED AS A PERMANENT MARKER.

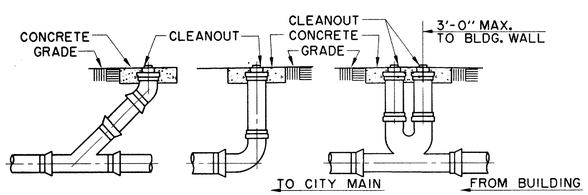

TYPICAL CLEANOUTS

RECORD DRAWING

THE SEAL APPEARING ON THIS DOCUMENT WAS AUTHORIZED BY DAVID E. MEYERS, P.E. 81512

STATE OF TEXAS
DAVID E. MEYERS
81512
REGISTERED
PROFESSIONAL ENGINEER
12/18/00

DATE	DESCRIPTION	REF NO.
6/23/99	ISSUED FOR CONSTRUCTION	N/A
5/17/99	ISSUED FOR BID	N/A

WASTEWATER DETAILS

ADDISON CIRCLE

PHASE II-B PUBLIC INFRASTRUCTURE

TOWN OF ADDISON, TEXAS

Huitt - Zollars, Inc.
3131 Mckinney Ave., Suite 600, Dallas, TX 75204
Phone (214) 871-3311/Fax (214) 871-0757

DESIGN	DRAWN	APPR.	SCALE	DATE	PROJECT NO.	NO.
HZI	HZI	DEM	N.T.S.	MAR. 99	01-1822-50	WW2

h:\proj\01182250\dgn\AUC3TYII.DGN

E:\AUTODESK\DOCUMENTS\AUC3TYII.DGN
Fri Dec 8 14:32:48 2000
\\NTDALLASE\DGN\PLOTTING\400M\AUC3TYII.PRF
Huitt-Zollars, Inc.
PRF ROTATION=90.000000
F:\DGN\MILLER.TBL
E:\AUTODESK\DOCUMENTS\AUC3TYII.DGN
Fri Dec 8 14:37:39 2000
\\NTDALLASE\DGN\PLOTTING\400M\AUC3TYII.PRF
Huitt-Zollars, Inc.

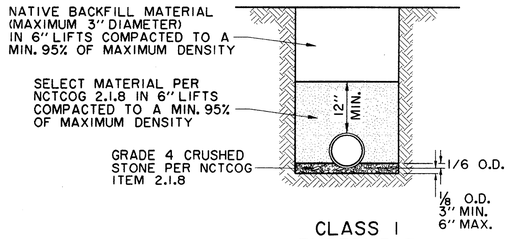

CLASS 1
EMBEDMENT
LOAD FACTOR = 1.5
N.T.S.

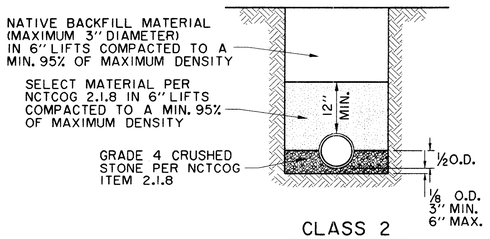

CLASS 2
EMBEDMENT
LOAD FACTOR = 1.9
N.T.S.

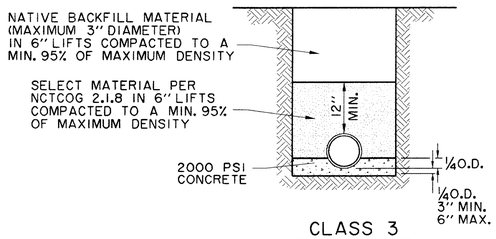

CLASS 3
EMBEDMENT
LOAD FACTOR = 2.8
N.T.S.

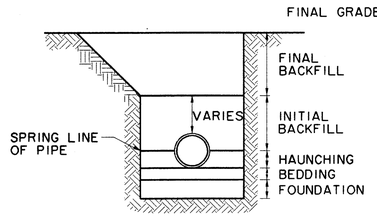

EMBEDMENT ZONES
NTS

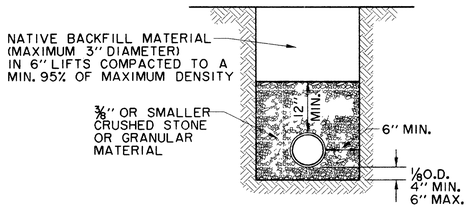

CLASS 4 EMBEDMENT
(SDR35 AND SDR26 P.V.C. PIPE ONLY)
LOAD FACTOR = 2.0
NTS

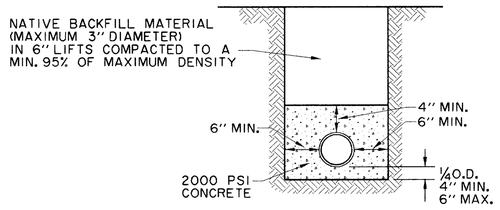

CONCRETE
ENCASEMENT
LOAD FACTOR = 4.2
N.T.S.

- TYPICAL NATIVE MATERIAL COMPACTED TO:
  95% OF STANDARD PROCTOR DENSITY AT
  OPTIMUM MOISTURE 0 TO +3% UNDER PAVEMENT
  95% OF STANDARD PROCTOR DENSITY AT
  OPTIMUM MOISTURE 0 TO +3% OUTSIDE CURB LINES
  JETTING IS NOT ALLOWED
  BACKFILL TO BE COMPACTED IN 6"+/- LIFTS
  TYPICAL NATIVE MATERIAL (MAX. 3" DIA.)

EMBEDMENT DETAILS FOR SANITARY SEWER

TABLE OF QUANTITIES OF 2000 psi CONCRETE, GRAVEL OR CRUSHED STONE
IN CUBIC YARDS PER 100 LINEAR FEET FOR EACH CLASS EMBEDMENT

TABLE OF QUANTITIES PER 100 LINEAR FEET REINFORCED CONCRETE PIPE							
SIZE OF PIPE IN INCHES I.D.	O.D. OF PIPE IN INCHES	TRENCH WIDTH IN INCHES	TRENCH WIDTH IN FEET	CLASS 1 EMBEDMENT CRUSHED STONE	CLASS 2 EMBEDMENT CONCRETE	CLASS 3 EMBEDMENT CONCRETE	CONCRETE ENCASEMENT
12	16.00	32	2.67	4.1	6.5	4.8	15.8
15	19.50	36	3.00	4.8	7.8	6.4	19.2
18	23.00	39	3.25	5.7	9.2	8.2	21.2
21	26.50	43	3.58	6.9	11.0	10.2	24.9
24	30.00	46	3.83	8.3	13.1	12.4	28.7
27	33.50	51	4.25	10.3	16.1	14.4	32.8
30	37.00	57	4.75	12.7	20.1	17.0	34.8
33	40.50	62	5.17	15.1	23.8	19.3	39.2
36	44.00	67	5.58	18.0	28.6	22.1	43.8

TABLE OF QUANTITIES PER 100 LINEAR FEET-PVC PIPE (IN CUBIC YARDS)					
SIZE OF PIPE IN INCHES I.D.	O.D. OF PIPE IN INCHES	TRENCH WIDTH IN INCHES	TRENCH WIDTH IN FEET	CLASS 4 EMBEDMENT CRUSHED STONE	CONCRETE ENCASEMENT
6	6.28	24	2.00	8.0	11.7
8	8.16	24	2.00	8.7	12.4
10	10.20	26	2.18	10.2	14.2
12	12.24	28	2.35	11.7	15.9
16	15.30	31	2.61	14.0	18.8
24		36	3.0		
30		42	3.5		

RECORD
DRAWING

THE SEAL APPEARING ON THIS DOCUMENT WAS AUTHORIZED BY DAVID E. MEYERS, P.E. 81512

DATE	DESCRIPTION	REF NO.
6/23/99	ISSUED FOR CONSTRUCTION	N/A
5/17/99	ISSUED FOR BID	N/A

WASTEWATER DETAILS

ADDISON CIRCLE

PHASE II-B PUBLIC INFRASTRUCTURE

TOWN OF ADDISON, TEXAS

Huitt - Zollars, Inc.
3131 Mckinney Ave., Suite 600, Dallas, TX 75204
Phone (214) 871-3311 Fax (214) 871-0757

DESIGN	DRAWN	APPR.	SCALE	DATE	PROJECT NO.	NO.
HZI	HZI	DEM	N.T.S.	MAR. 99	01-1822-50	WW3

h:\proj\01182250\dgn\AUC3TY12.DGN

B:\AUC3SD.DGN, 4.5,6.3,16.2,0.2,3-29.32-34.37-39.43-52.55-61
no ref loaded, *no ref name*, *no ref levels*
PRF ROTATION=90.000000
F:\SS\MILLER.TBL
h:\proj\01182250\dgn\AUC3TY12.DGN
F:\SS\ALL.TBL
\\VIZDALLAS1\S350-PLOT1\NOV400MA\AUC3TY12.PRF
Huitt-Zollars, Inc.

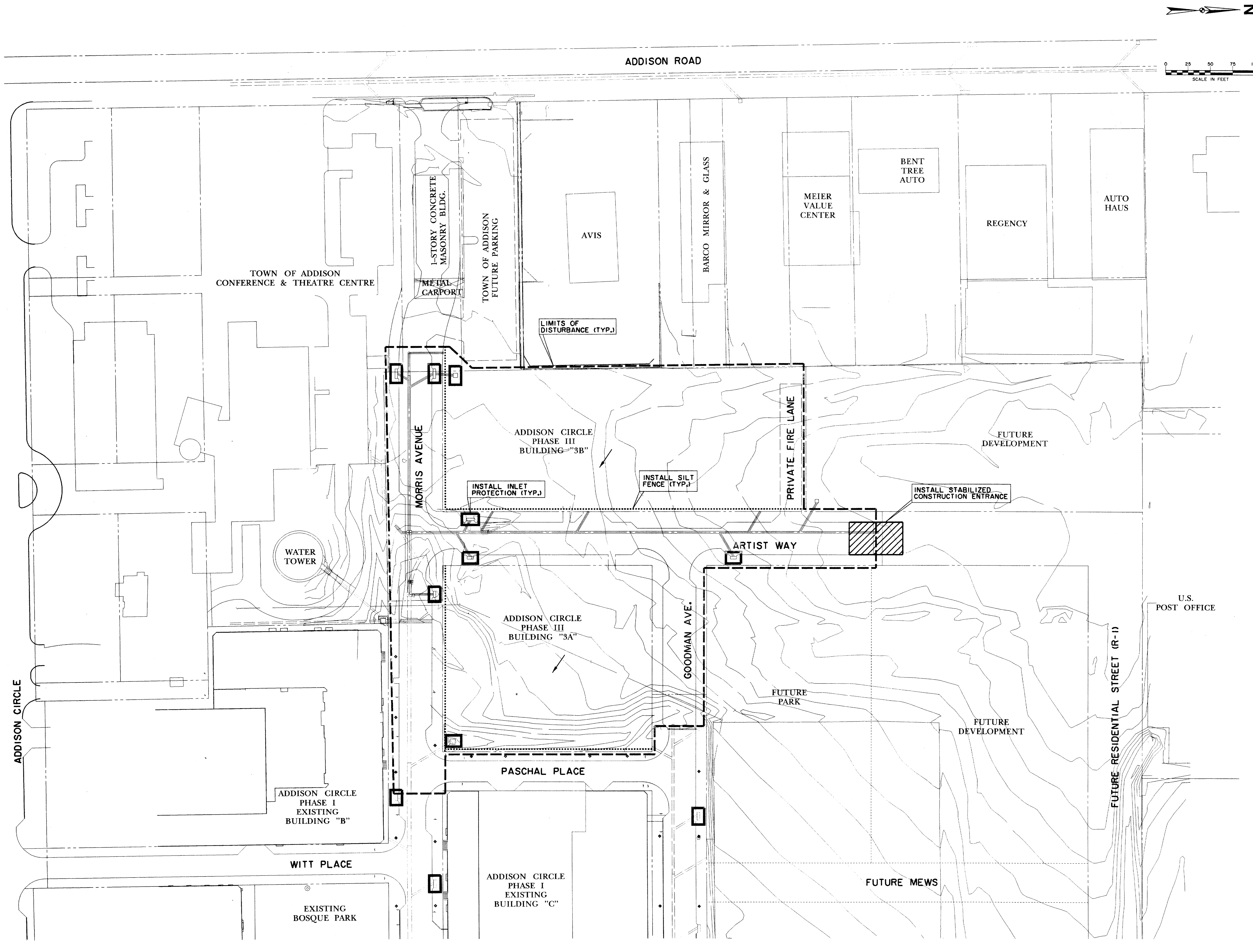

h:\proj\01182250\dgn\AUC3EC01.DGN
Fri Dec 8 14:30:24 2000
\\HZDALLAS2\DISK0\PLOTTING\400M\AUC3EC01.PRF
Huitt-Zollars, Inc.

PRF ROTATION=0.920000
F:\tbl\MILLER.TBL

T, AUC3TOPO.DGN, 1,11,12,16,17,21-29,31,51-53,56,57,60-62 •no ref logical•, •no ref name•, •no ref levels•
U, AUC3UTIL.DGN, 41,43 •no ref logical•, •no ref name•, •no ref levels•
TI, AUC3CONT.DGN, 5,11-13 •no ref logical•, •no ref name•, •no ref levels•
P, AUC3BASE.DGN, 1-3,11,12,41,42,44 •no ref logical•, •no ref name•, •no ref levels•
B, AUC3BD.DGN, 2,5,13,20,50,56,59-61 •no ref logical•, •no ref name•, •no ref levels•

AREA OF DISTURBANCE
4.33 ACRES

NOTES:

1. SEE DRAINAGE AREA MAP FOR DRAINAGE AREAS AND CALCULATIONS.
2. SEE POLLUTION CONTROL DETAILS FOR TYPES OF INLET PROTECTION.

LEGEND:

- SILT FENCE
- INLET PROTECTION
- EXISTING CONTOURS
- DIRECTION OF RUNOFF
- LIMITS OF DISTURBANCE
- STABILIZED CONSTRUCTION ENTRANCE/EXIT

RECORD DRAWING

BENCHMARKS:

BM#5
"□" CUT ON 8' INLET ON NORTH CURB LINE OF GOODMAN AVE. ±75' EAST OF PASCHAL PLACE.
ELEV. 629.98

BM#6
"□" CUT AT ℄ OF 8' INLET AT THE SOUTHWEST CORNER OF MORRIS AVE. AND WITT PLACE.
ELEV. 627.29

BM#7
"□" CUT AT WEST CORNER OF ADDISON THEATRE CENTRE PARKING LOT, SECOND ENTRANCE NORTH OF ADDISON RD.
ELEV. 637.66

THE SEAL APPEARING ON THIS DOCUMENT WAS AUTHORIZED BY DAVID E. MEYERS, P.E. 81512

STATE OF TEXAS
DAVID E. MEYERS
81512
REGISTERED
PROFESSIONAL ENGINEER
12/8/00

DATE	DESCRIPTION	REF NO.
6/23/99	ISSUED FOR CONSTRUCTION	N/A
5/17/99	ISSUED FOR BID	N/A

POLLUTION CONTROL PLAN

ADDISON CIRCLE

PHASE II-B PUBLIC INFRASTRUCTURE

TOWN OF ADDISON, TEXAS

Huitt - Zollars, Inc.
3131 Mckinney Ave., Suite 600, Dallas, TX 75204
Phone (214) 871-3311/Fax (214) 871-0757

DESIGN	DRAWN	APPR.	SCALE	DATE	PROJECT NO.	NO.
HZI	HZI	DEM	1"=50'	MAR. 99	01-1822-50	PC1

h:\proj\01182250\dgn\AUC3EC01.DGN

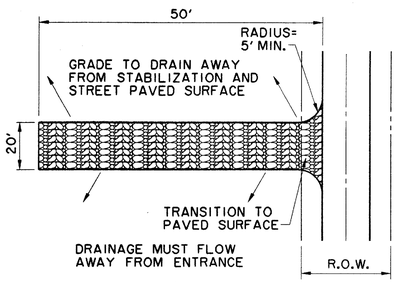

PLAN

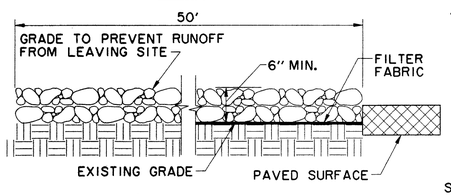

PROFILE

STABILIZED CONSTRUCTION ENTRANCE / EXIT

NCTCOG 02270.G
STORM WATER QUALITY
BEST MANAGEMENT PRACTICES
FOR CONSTRUCTION ACTIVITIES

DETAIL 'A'

N.T.S.

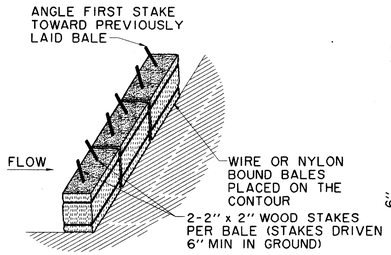

ANCHORING DETAIL

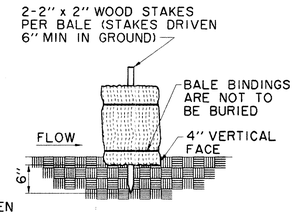

EMBEDDING DETAIL

NOTE: HAY BALES TO BE PLACED AROUND ALL INLETS DURING CONSTRUCTION.

DETAIL 'C'
TEMPORARY STRAW BALE DIKE (CHECK DAM)

NCTCOG 02270.A
STORM WATER QUALITY
BEST MANAGEMENT PRACTICES
FOR CONSTRUCTION ACTIVITIES

N.T.S.

STRAW BALES SHALL BE PLACED IN A ROW WITH TIGHTLY ABUTTING ENDS. EMBED BALES IN THE SOIL A MINIMUM OF FOUR INCHES. STRAW BALES SHALL BE REPLACED IF THEY ARE DAMAGED OR HAVE DEGRADED TO A POINT OF INEFFECTIVENESS. REPLACEMENT OF STRAW BALES SHALL OCCUR NO LESS OFTEN THAN 90 DAYS, UNLESS NOTIFIED BY ENGINEER.

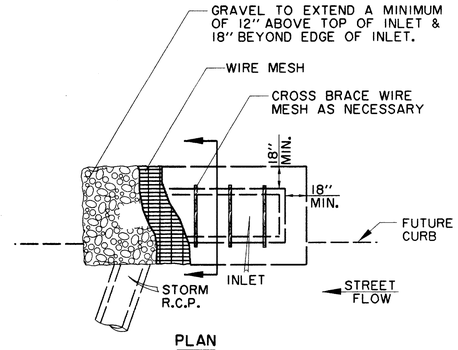

PLAN

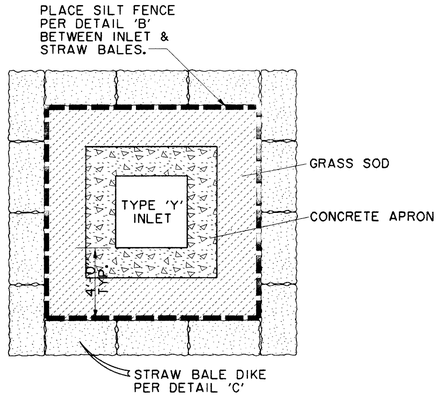

TYPE 'Y' PROTECTION (TYP.)

DETAIL 'F'

N.T.S.

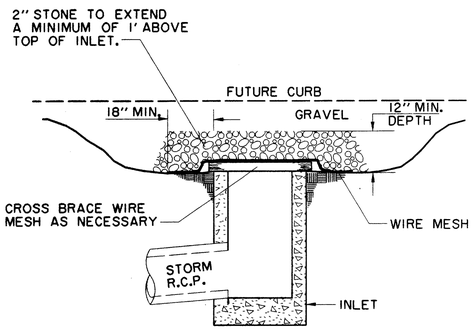

CROSS-SECTION

INLET PROTECTION WIRE MESH & GRAVEL

NCTCOG 02270.G
STORM WATER QUALITY
BEST MANAGEMENT PRACTICES
FOR CONSTRUCTION ACTIVITIES

DETAIL 'E'

N.T.S.

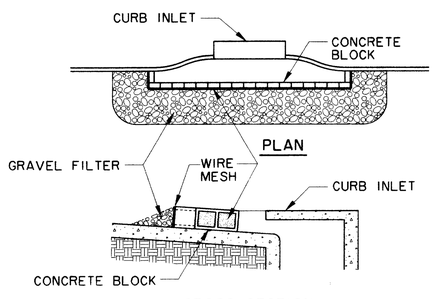

CROSS-SECTION

INLET PROTECTION BLOCK & GRAVEL

NCTCOG 02270.G
STORM WATER QUALITY
BEST MANAGEMENT PRACTICES
FOR CONSTRUCTION ACTIVITIES

DETAIL 'G'

N.T.S.

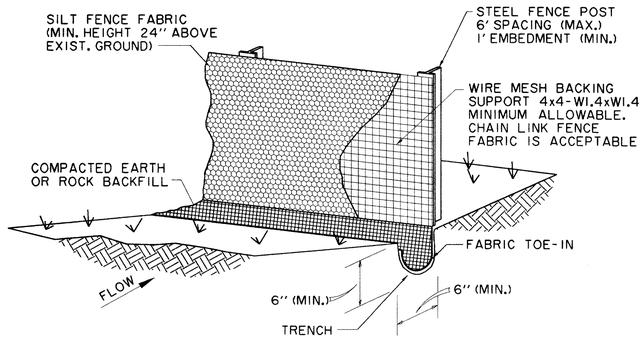

SILT FENCE SHOULD BE SECURELY FASTENED TO BACKING SUPPORT AND POSTS.

SILT FENCE

NCTCOG 02270.B
STORM WATER QUALITY
BEST MANAGEMENT PRACTICES
FOR CONSTRUCTION ACTIVITIES

DETAIL 'B'

N.T.S.

NOTES:

1. A NOTICE OF INTENT (N.O.I.) WILL BE PREPARED BY THE CONTRACTOR FOR THIS PROJECT IN ACCORDANCE WITH THE REQUIREMENTS OF THE N.P.D.E.S. GENERAL PERMIT FOR STORM WATER DISCHARGES ASSOCIATED WITH CONSTRUCTION.
2. ALL CONTRACTORS WILL COMPLY WITH THE REQUIREMENTS AND INTENT OF THE N.P.D.E.S. GENERAL PERMIT FOR STORM WATER DISCHARGES.
3. EACH CONTRACTOR SHALL SUBMIT A NOTICE OF INTENT (N.O.I.) FOR STORM WATER DISCHARGE PERMIT COVERAGE. THIS SUBMITTAL SHALL BE COORDINATED WITH THE TOWN AND SHALL OCCUR NO LESS THAN 48 HOURS PRIOR TO THE COMMENCEMENT OF ANY CONSTRUCTION ACTIVITY.
4. EACH CONTRACTOR SHALL OBTAIN AND SUBMIT TO TOWN A POLLUTION PREVENTION CERTIFICATION FROM EACH SUBCONTRACTOR WHOSE WORK IMPACTS THE STORM WATER POLLUTION PREVENTION PLAN (S.W.P.P.P.) PRIOR TO THE PERFORMANCE OF ANY WORK BY SAID SUBCONTRACTOR. THESE CERTIFICATIONS SHALL BECOME A PART OF THE STORM WATER POLLUTION PREVENTION PLAN.
5. CONTRACTOR SHALL INSTALL EROSION CONTROL MEASURES, AS INDICATED ON THE PLANS AND AS FIELD CONDITIONS WARRANT, PRIOR TO COMMENCING ANY CONSTRUCTION ACTIVITY. REPAIRS OR MODIFICATIONS TO THE MEASURES WILL BE MADE BY THE CONTRACTOR IF THE CONTROL MEASURES PROVE INEFFECTIVE OR IF ADDITIONAL CONTROL MEASURES ARE NECESSARY.
6. CONTRACTOR SHALL TAKE APPROPRIATE MEASURES TO PREVENT TRACKING OF MUD AND/OR SOILS ONTO EXISTING AND/OR NEW PAVEMENT. ANY TRACKING THAT OCCURS SHALL BE REMOVED IMMEDIATELY BY THE CONTRACTOR.
7. CONTRACTOR SHALL CONSTRUCT INLET PROTECTION FOR ALL INCOMPLETE CURB INLETS AND SHALL TAKE EVERY MEASURE TO KEEP SOILS AND SEDIMENTS FROM ENTERING THE STORM SEWER SYSTEM.
8. CONTRACTOR SHALL CONSTRUCT DROP INLET PROTECTION FOR ALL INCOMPLETE DROP INLETS AND SHALL TAKE EVERY MEASURE TO KEEP SOILS AND SEDIMENTS FROM ENTERINGTHE STORM SEWER SYSTEM.
9. AT A MINIMUM, PERIMETER CONTROLS SUCH AS SILT FENCE OR STRAW BALES SHALL BE INSTALLED AT ALL DOWN SLOPE BOUNDARIES AND AS WARRANTED WHERE PAVEMENT REMOVAL, UTILITY CONSTRUCTION, GRADING, OR OTHER CONSTRUCTION ACTIVITIES ARE TO BE PERFORMED. THE CONTRACTOR SHALL AT ALL TIMES TAKE SUCH MEASURES AS NECESSARY TO MINIMIZE OFFSITE TRACKING OR TRANSPORT OF SEDIMENT AND DEBRIS.
10. DAMAGE TO ADJACENT PROPERTY AND/OR TO RECEIVING WATERS CAUSED BY IMPROPERLY INSTALLED OR POORLY MAINTAINED EROSION CONTROL MEASURES WILL BE THE RESPONSIBILITY OF THE CONTRACTOR.
11. THE CONTRACTOR SHALL BE RESPONSIBLE FOR THE REMOVAL AND DISPOSAL OF ANY SILTATION CAUSED BY HIS OPERATIONS AND/OR FAILURE OF THE EROSION CONTROL MEASURES.
12. CONTRACTOR SHALL REMOVE AND PROPERLY DISPOSE OF ACCUMULATED SILT AND SEDIMENT FROM EROSION CONTROL MEASURES WHEN IT REACHES A DEPTH OF SIX (6) INCHES OR IMPAIRS THE EFFECTIVENESS OF THE MEASURES.
13. THE TOWN'S REPRESENTATIVE MAY INSPECT THE PROJECT EVERY SEVEN DAYS, AT A MINIMUM, AND AFTER EVERY RAINFALL OF ONE-HALF INCHES OR GREATER TO DETERMINE THE INTEGRITY AND EFFECTIVENESS OF THE EROSION CONTROL MEASURES. A WRITTEN INSPECTION REPORT MAY BE FILED WITH THE POLLUTION PREVENTION PLAN. THIS INSPECTION DOES NOT RELIEVE THE CONTRACTOR'S RESPONSIBILITY FOR INSPECTION AND MAINTENANCE OF THE EROSION CONTROL MEASURES OR HIS DUTY TO COMPLY WITH THE INTENT AND CONDITIONS OF THE N.P.D.E.S. GENERAL PERMIT.
14. ALL STOCKPILED SOILS WILL BE SURROUNDED BY A STRAW BALE DIKE, SILT FENCE, SEDIMENT CONTROL SWALE, OR EQUIVALENT MEASURE TO PROPERLY CONTROL SEDIMENT RUNOFF, AS APPROVED BY THE TOWN.
15. CONTRACTOR SHALL STABILIZE ANY AREA WHERE CONSTRUCTION ACTIVITY IS TO BE TEMPORARILY OR PERMANENTLY CEASED FOR MORE THAN 14 DAYS.

RECORD DRAWING

THE SEAL APPEARING ON THIS DOCUMENT WAS AUTHORIZED BY DAVID E. MEYERS, P.E. 81512

STATE OF TEXAS · DAVID E. MEYERS · 81512 · REGISTERED · PROFESSIONAL ENGINEER

DATE	DESCRIPTION	REF NO.
6/23/99	ISSUED FOR CONSTRUCTION	N/A
5/17/99	ISSUED FOR BID	N/A

POLLUTION CONTROL DETAILS

ADDISON CIRCLE

PHASE II-B PUBLIC INFRASTRUCTURE

TOWN OF ADDISON, TEXAS

Huitt - Zollars, Inc.
3131 Mckinney Ave., Suite 600, Dallas, TX 75204
Phone (214) 871-3311/Fax (214) 871-0757

DESIGN	DRAWN	APPR.	SCALE	DATE	PROJECT NO.	NO.
HZI	HZI	DEM	N.T.S.	MAR. 99	01-1822-50	PC2

h:\proj\01182250\dgn\AUC3EC02.DGN

PRF ROTATION=90.000000
FrYou'RALLEA.TBL
h:\proj\01182250\dgn\AUC3EC02.DGN
Fri Dec 8 14:30:17 2000
\\NTDSAL-LASER\DB0\PLOTTING\400#\AUC3EC02.PMP
Huitt-Zollars, Inc.
8, AUC3EC02, 4.5,8.1,9.2,10.2,3-23,32-34,37-39,43-52,55-61
•no ref logo1•, •no ref name•, •no ref levels•

ADDISON ROAD

N

0 25 50 75 100
SCALE IN FEET

TOWN OF ADDISON
CONFERENCE & THEATRE CENTRE

1-STORY CONCRETE MASONRY BLDG.

METAL CARPORT

TOWN OF ADDISON
FUTURE PARKING

AVIS

BARCO MIRROR & GLASS

MEIER
VALUE
CENTER

BENT
TREE
AUTO

REGENCY

AUTO
HAUS

THREE PHASE TRANSFORMERS

FUTURE SWITCH GEAR

SWITCH GEAR

FUTURE THREE PHASE TRANSFORMERS

4E6 & 4E2

COURTYARD

RESIDENT PARKING GARAGE
5 LEVELS

PRIMARY METER

SINGLE PHASE TRANSFORMERS

ADDISON CIRCLE
PHASE III
BUILDING "3B"

ADDISON CIRCLE
PHASE III
BUILDING "3B"

PRIVATE FIRE LANE

FUTURE
DEVELOPMENT

6400

MORRIS AVENUE

7+00

8+00

ARTIST WAY

18+00 19+00 20+00 21+00 22+00 23+00 24+00 25+00

6E6

6E6 & 4E2

6E6 & 4E2

6E6 & 4E2

WATER TOWER

ONE

9+00

COURTYARD

GOODMAN AVE.

6E6

EX. TEMP. POWER TO BE REMOVED BY OWNER

ADDISON CIRCLE
PHASE III
BUILDING "3A"

FUTURE
PARK

FUTURE
DEVELOPMENT

10+00

18+00 19+00 20+00

PASCHAL PLACE

TEMP. EX. METER ON P.P.

TEMP. POWER TO BE PROVIDED BY OWNER

11+00

ADDISON CIRCLE
PHASE I
EXISTING
BUILDING "B"

WITT PLACE

ADDISON CIRCLE
PHASE I
EXISTING
BUILDING "C"

FUTURE MEWS

EXISTING
BOSQUE PARK

FUTURE RESIDENTIAL STREET (R-1)

U.S.
POST OFFICE

RECORD DRAWING

BENCHMARKS:

BM#5
"D" CUT ON 8' INLET ON NORTH CURB LINE OF GOODMAN AVE. ±75' EAST OF PASCHAL PLACE.
ELEV. 629.98

BM#6
"D" CUT AT ℄ OF 8' INLET AT THE SOUTHWEST CORNER OF MORRIS AVE. AND WITT PLACE.
ELEV. 627.29

BM#7
"D" CUT AT WEST CORNER OF ADDISON THEATRE CENTRE PARKING LOT, SECOND ENTRANCE NORTH OF ADDISON RD.
ELEV. 637.66

THE SEAL APPEARING ON THIS DOCUMENT WAS AUTHORIZED BY DAVID E. MEYERS, P.E. 81512

STATE OF TEXAS
DAVID E. MEYERS
81512
REGISTERED
PROFESSIONAL ENGINEER

DATE	DESCRIPTION	REF NO.
6/23/99	ISSUED FOR CONSTRUCTION	N/A
5/17/99	ISSUED FOR BID	N/A

ELECTRICAL SITE PLAN

ADDISON CIRCLE

PHASE II-B PUBLIC INFRASTRUCTURE

TOWN OF ADDISON, TEXAS

Huitt - Zollars, Inc.
3131 Mckinney Ave., Suite 600, Dallas, TX 75204
Phone (214) 871-3311/Fax (214) 871-0757

DESIGN	DRAWN	APPR.	SCALE	DATE	PROJECT NO.	NO.
HZI	HZI	DEM	1"=50'	MAR. 99	01-1822-50	E1

h:\proj\01182250\dgn\AUC3SP06.DGN

T: AUC3TOPOLOGN, U/E/G/E/
U: AUC3UTILLOGN, 46-49
P: AUC3BASEMAP, 3,5,11,17,18,23,27-29,32,34-36,39,44,45,55-57
B: AUC3BASEMAP, 3,5,11,17,18,23,27-29,32,34-36,39,44,45,55-57
PW ROTATION=0.000000
FX TRANSMILLER
h:\proj\01182250\dgn\AUC3SP06.DGN
Fri Dec 3 14:28:03 2000
\\HZDALLAS01\800\PLOTTING\400M-AUC3SP06.PRF
Huitt-Zollars, Inc.
no ref logos, *no ref name*, *no ref levels*

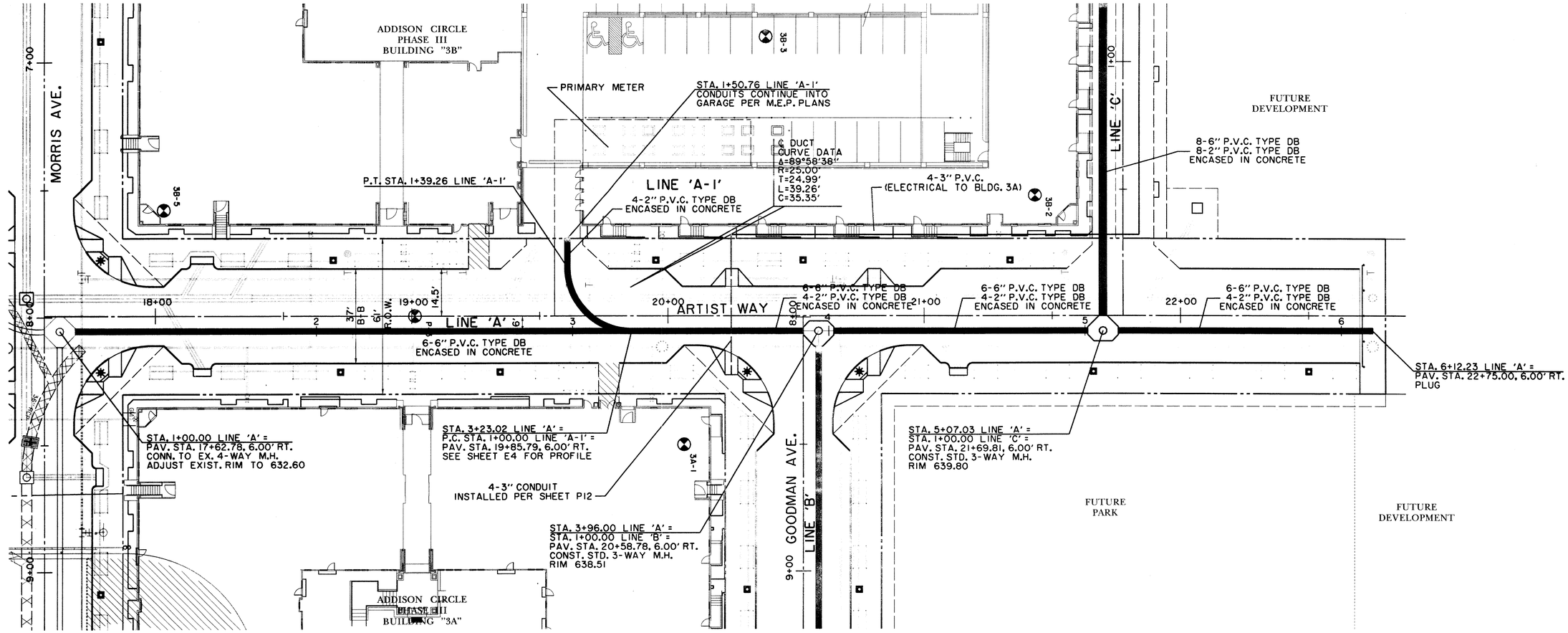

RECORD DRAWING

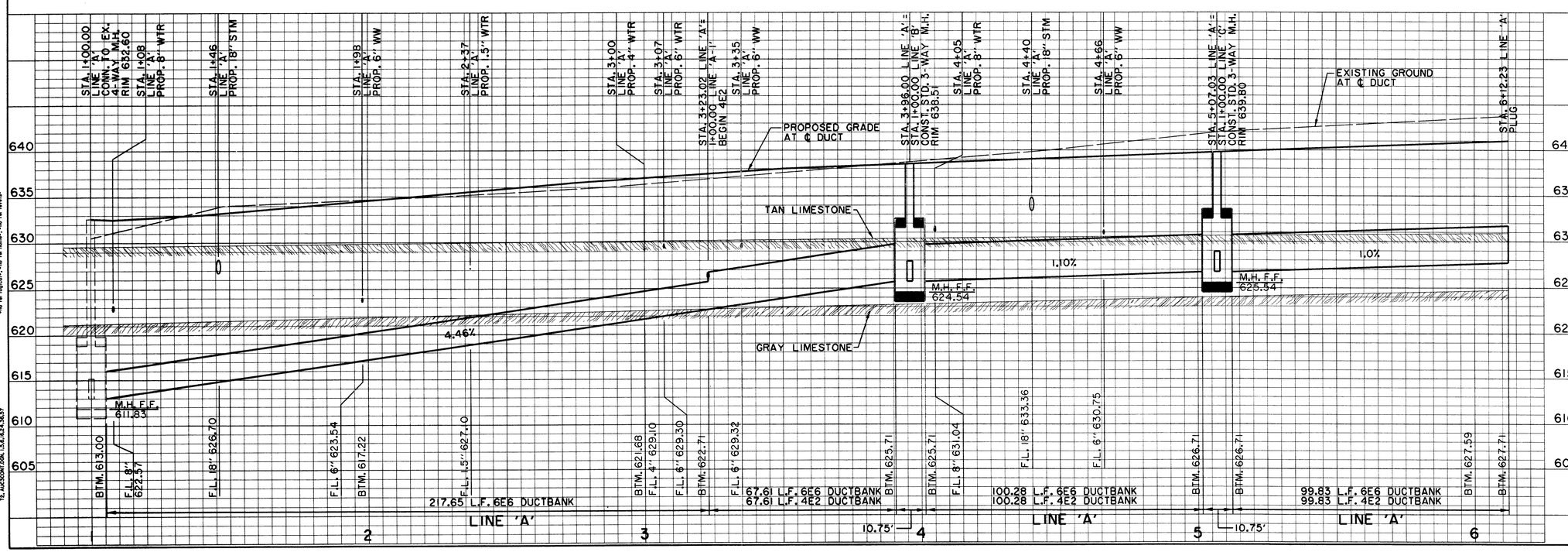

BENCHMARKS:

BM#5
"□" CUT ON 8" INLET ON NORTH CURB LINE OF GOODMAN AVE. ±75' EAST OF PASCHAL PLACE.
ELEV. 629.98

BM#6
"□" CUT AT ℄ OF 8" INLET AT THE SOUTHWEST CORNER OF MORRIS AVE. AND WITT PLACE.
ELEV. 627.29

BM#7
"□" CUT AT WEST CORNER OF ADDISON THEATRE CENTRE PARKING LOT, SECOND ENTRANCE NORTH OF ADDISON RD.
ELEV. 637.66

THE SEAL APPEARING ON THIS DOCUMENT WAS AUTHORIZED BY DAVID E. MEYERS, P.E. 81512

STATE OF TEXAS · DAVID E. MEYERS · 81512 · REGISTERED PROFESSIONAL ENGINEER · 12/18/00

DATE	DESCRIPTION	REF NO.
6/23/99	ISSUED FOR CONSTRUCTION	N/A
5/17/99	ISSUED FOR BID	N/A

ELECTRICAL DUCTBANK PLAN & PROFILE
LINE 'A' - STA. 1+00.00 TO STA. 6+12.23

ADDISON CIRCLE
PHASE II-B PUBLIC INFRASTRUCTURE
TOWN OF ADDISON, TEXAS

Hiatt - Zollars, Inc.
3131 Mckinney Ave., Suite 600, Dallas, TX 75204
Phone (214) 871-3311/Fax (214) 871-0757

DESIGN	DRAWN	APPR.	SCALE	DATE	PROJECT NO.	NO.
HZI	HZI	DEM	H: 1"=20' V: 1"=6'	MAR. 99	01-1822-50	E2

h:\proj\01182250\dgn\AUC3EL03.DGN

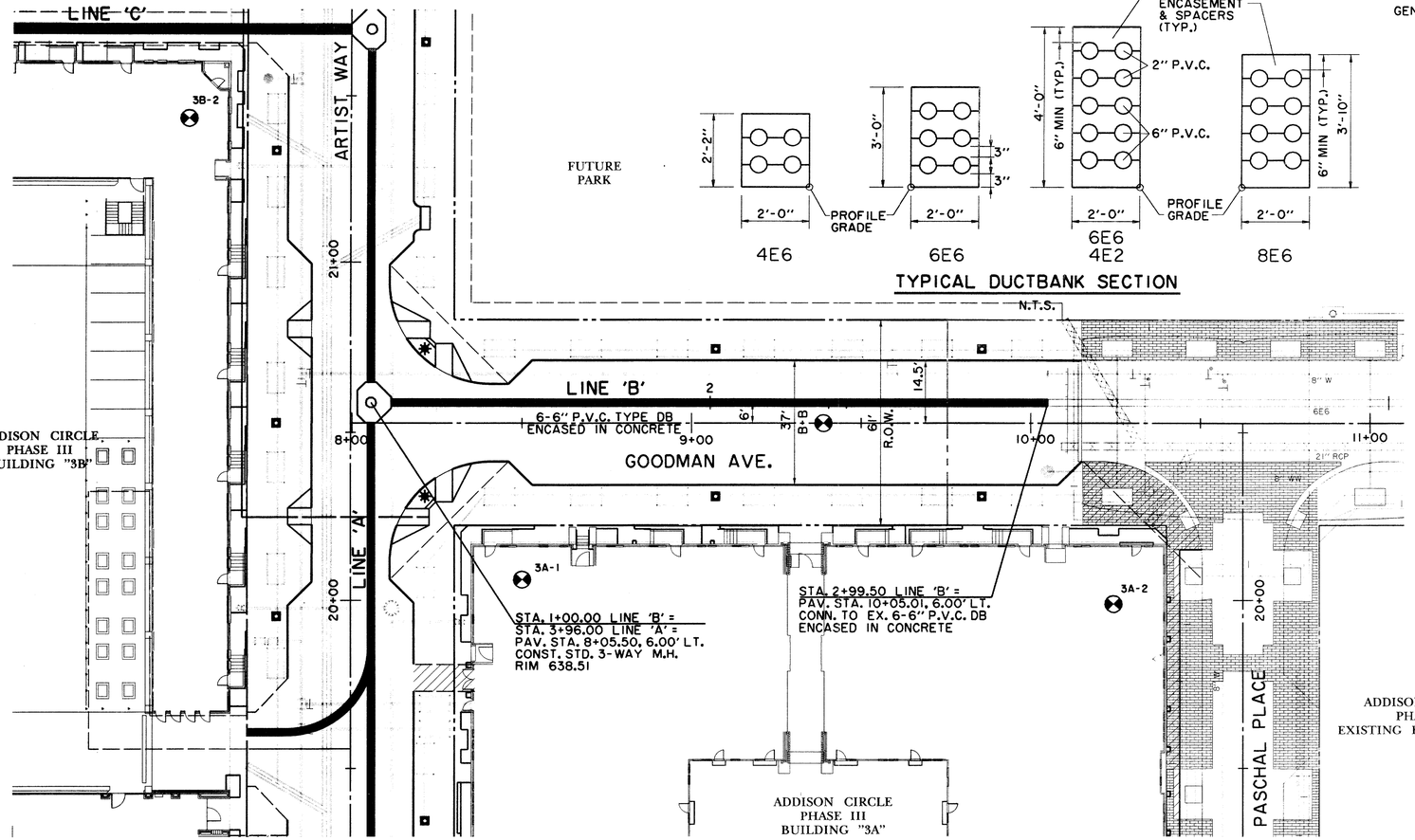

GENERAL NOTES:

1. CONDUIT TO BE 6" P.V.C., TYPE DB.
2. CONCRETE ENCASEMENT: ALL CONCRETE TO HAVE A MINIMUM COMPRESSIVE STRENGTH OF 3000 PSI AT TWENTY-EIGHT DAYS.
3. CONDUIT RUN BETWEEN MANHOLES TO BE INSTALLED WITH A MINIMUM SLOPE OF 4" PER 100 FEET TO DRAIN THROUGHOUT ITS ENTIRE LENGTH INTO A MANHOLE OR MANHOLES.
4. INSTALL 6" PVC, TYPE DB CONDUIT BENDS AND ADAPTERS ON ANGLES GREATER THAN 15°.
5. SPACERS (CARLON #288RLN [BASE] AND 289RLN [INTERMEDIATE] ARE REQUIRED. THEY SHALL BE SPACED AT 5' INTERVALS AND ARE TO BE TIED TOGETHER BY NON-METALLIC TIE- WRAPS. ALL SPACERS TO PROVIDE 3" VERTICAL AND HORIZONTAL SEPARATION BETWEEN CONDUITS.
6. WHEN COMPLETE, ALL CONDUIT WILL BE CHECKED BY PULLING A MANDREL/SWAB THROUGH ENTIRE LENGTH OF CONDUIT.
7. CONSTRUCTION PLANS SHOW APPROXIMATE RIM ELEVATION; HOWEVER, IT IS THE CONTRACTOR'S RESPONSIBILITY TO INSTALL THE NECESSARY AMOUNT OF NECK TO BRING THE TOP OF THE COVER 2" ABOVE FINISHED GRADE OR FLUSH WITH STREET GRADE WHEN COVER IS IN STREET.
8. BACKFILL OPERATION SHALL BEGIN AFTER CONCRETE HAS HAD TIME TO CURE (CURING TIME IS AT THE DISCRETION OF TU'S INSPECTOR). BACKFILL SHALL HAVE NO ROCKS LARGER THAN 1" IN DIAMETER AND SHALL BE COMPACTED TO 95% STANDARD PROCTOR DENSITY BETWEEN 0% AND 3% OF OPTIMUM MOISTURE CONTENT.

RECORD DRAWING

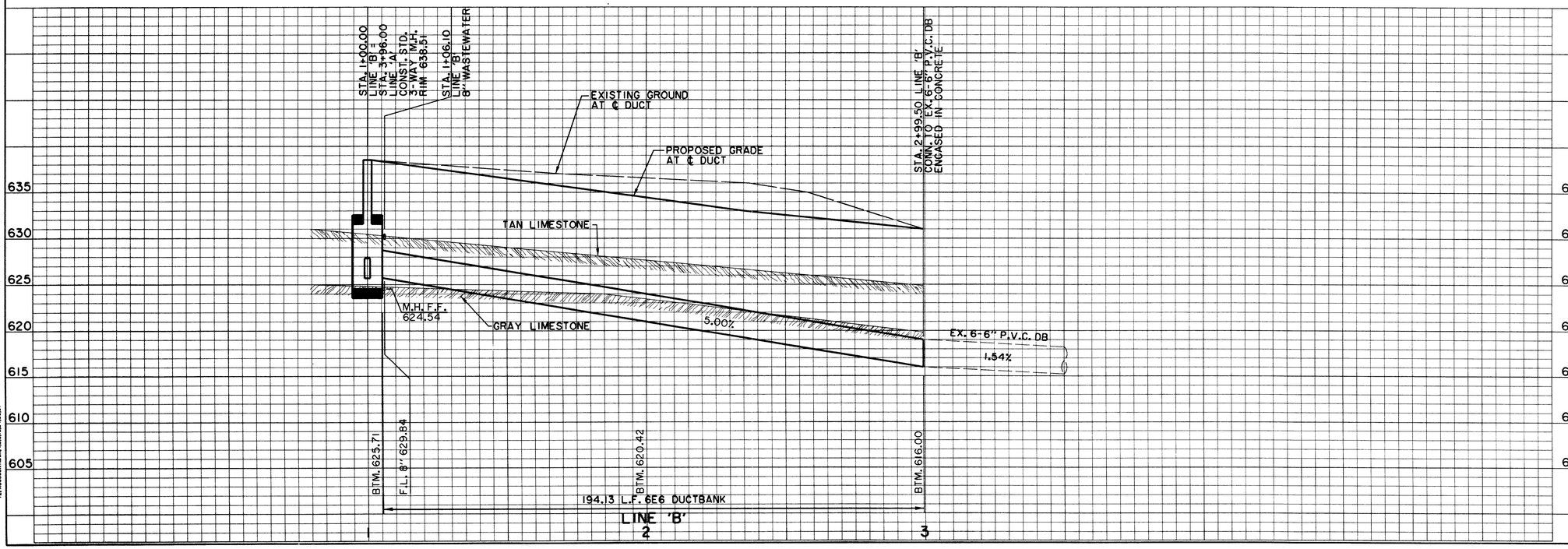

BENCHMARKS:

BM#5
"□" CUT ON 8' INLET ON NORTH CURB LINE OF GOODMAN AVE. ±75' EAST OF PASCHAL PLACE.
ELEV. 629.98

BM#6
"□" CUT AT ℄ OF 8' INLET AT THE SOUTHWEST CORNER OF MORRIS AVE. AND WITT PLACE.
ELEV. 627.29

BM#7
"□" CUT AT WEST CORNER OF ADDISON THEATRE CENTRE PARKING LOT, SECOND ENTRANCE NORTH OF ADDISON RD.
ELEV. 637.66

THE SEAL APPEARING ON THIS DOCUMENT WAS AUTHORIZED BY DAVID E. MEYERS, P.E. 81512

STATE OF TEXAS · DAVID E. MEYERS · 81512 · REGISTERED PROFESSIONAL ENGINEER · 12/19/00

DATE	DESCRIPTION	REF NO.
6/23/99	ISSUED FOR CONSTRUCTION	N/A
5/17/99	ISSUED FOR BID	N/A

ELECTRICAL DUCTBANK PLAN & PROFILE
LINE 'B' - STA. 1+00.00 TO STA. 2+99.50

ADDISON CIRCLE
PHASE II-B PUBLIC INFRASTRUCTURE
TOWN OF ADDISON, TEXAS

Huitt - Zollars, Inc.
3131 Mckinney Ave., Suite 600, Dallas, TX 75204
Phone (214) 871-3311/Fax (214) 871-0757

DESIGN	DRAWN	APPR.	SCALE	DATE	PROJECT NO.	NO.
HZI	HZI	DEM	H: 1"=20' V: 1"=6'	MAR. 99	01-1822-50	E3

h:\proj\01182250\dgn\AUC3EL04.DGN

PRF ROTATION=90.00000
h:\proj\01182250\dgn\AUC3EL04.DGN
Fri Dec 8 14:27:28 2000
\\VIZDALLAS01\DISK0\PLOTTING\400MHA\AUC3EL04.PRF
Huitt-Zollars, Inc.

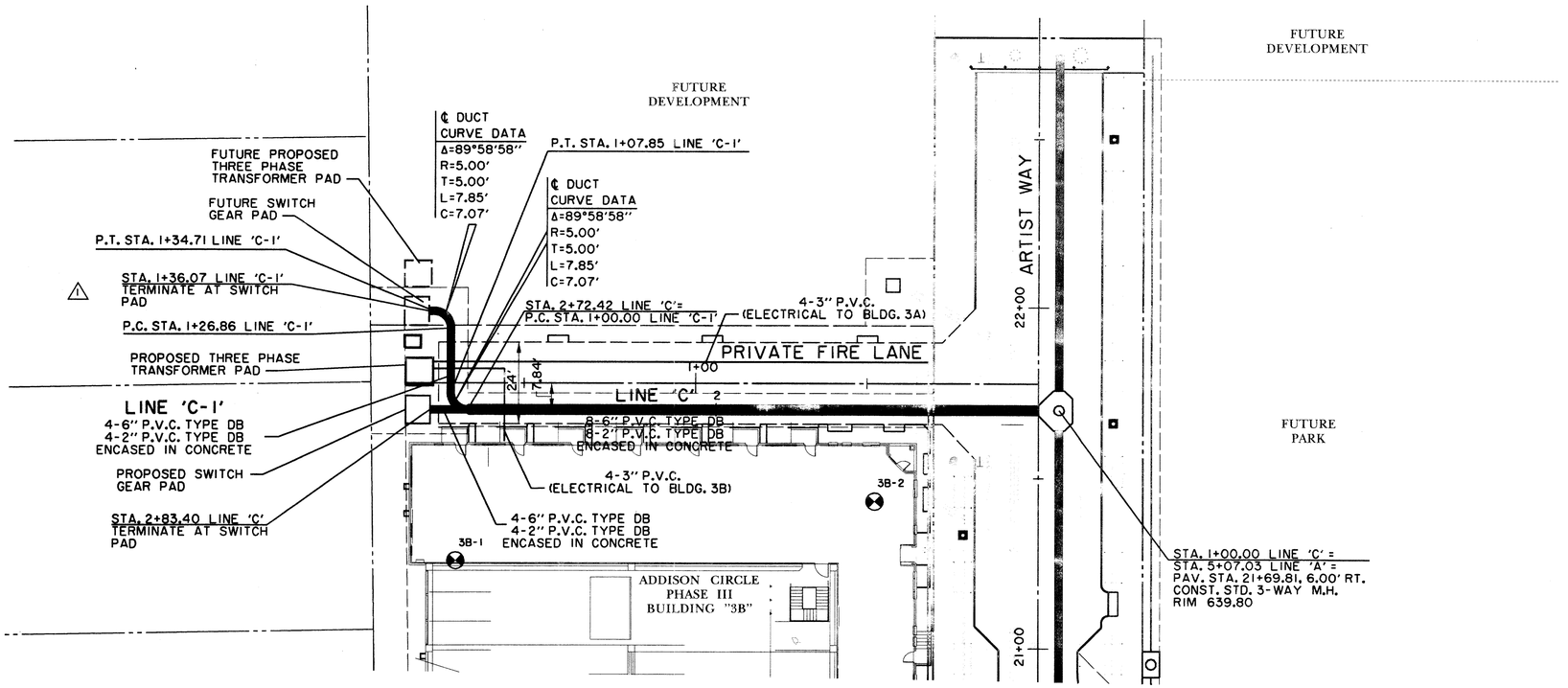

N

0 10 20 30 40
SCALE IN FEET

SEE SHEET NO. E3 GENERAL NOTES.

RECORD DRAWING

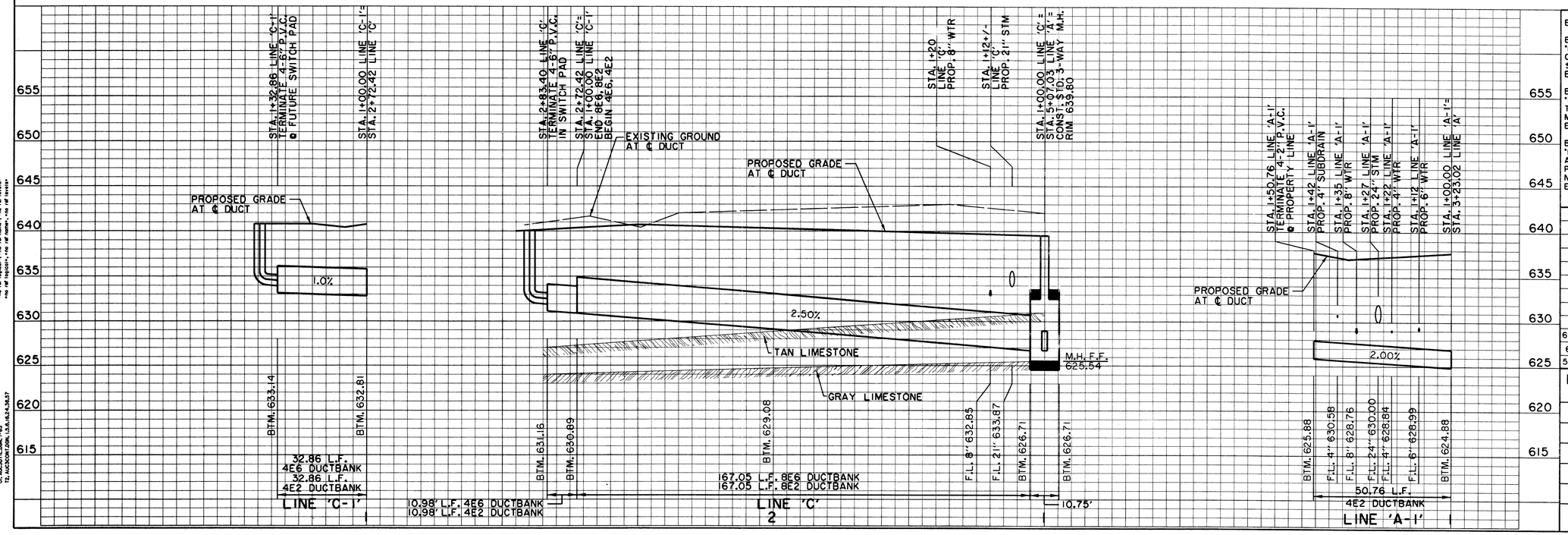

BENCHMARKS:

BM#5
"□" CUT ON 8' INLET ON NORTH CURB LINE OF GOODMAN AVE. ±75' EAST OF PASCHAL PLACE.
ELEV. 629.98

BM#6
"□" CUT AT ℄ OF 8' INLET AT THE SOUTHWEST CORNER OF MORRIS AVE. AND WITT PLACE.
ELEV. 627.29

BM#7
"□" CUT AT WEST CORNER OF ADDISON THEATRE CENTRE PARKING LOT, SECOND ENTRANCE NORTH OF ADDISON RD.
ELEV. 637.66

THE SEAL APPEARING ON THIS DOCUMENT WAS AUTHORIZED BY DAVID E. MEYERS, P.E. 81512

STATE OF TEXAS · DAVID E. MEYERS · 81512 · REGISTERED PROFESSIONAL ENGINEER · 12/15/99

DATE	DESCRIPTION	REF NO.
6/23/99	ISSUED FOR CONSTRUCTION	N/A
6/2/99	ADDENDUM #1	1
5/17/99	ISSUED FOR BID	N/A

ELECTRICAL DUCTBANK PLAN & PROFILE
LINE 'C' - STA. 1+00.00 TO STA. 2+83.40

ADDISON CIRCLE
PHASE II-B PUBLIC INFRASTRUCTURE
TOWN OF ADDISON, TEXAS

Huitt - Zollars, Inc.
3131 Mckinney Ave., Suite 600, Dallas, TX 75204
Phone (214) 871-3311/Fax (214) 871-0757

DESIGN	DRAWN	APPR.	SCALE	DATE	PROJECT NO.	NO.
HZI	HZI	DEM	H: 1"=20' V: 1"=6'	MAR. 99	01-1822-50	E4

h:\proj\01182250\dgn\AUC3ELI5.DGN

SHEET NO. 1
E-NUA-1

—TYPE "B" MANHOLE—

DETAIL #①

NOTE: SEE DETAIL # (21) FOR DEEP PANEL WHEN CALLED FOR ON JOB SKETCH.

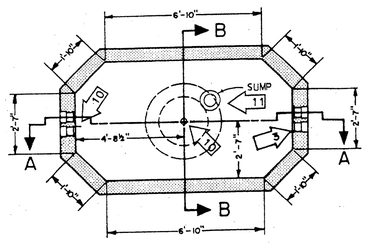

PLAN VIEW

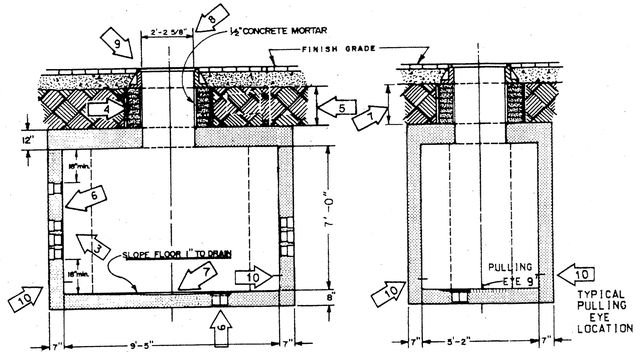

SECTION A-A

SECTION B-B

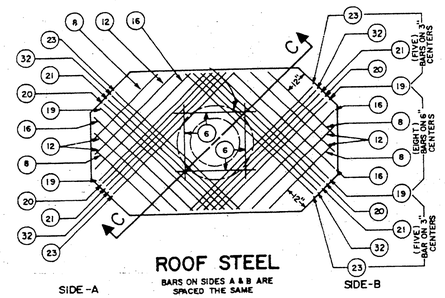

ROOF STEEL

BARS ON SIDES A & B ARE SPACED THE SAME

SIDE-A SIDE-B

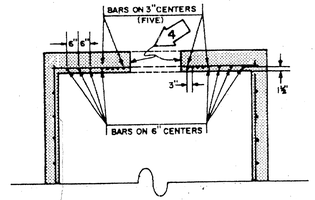

SECTION C-C

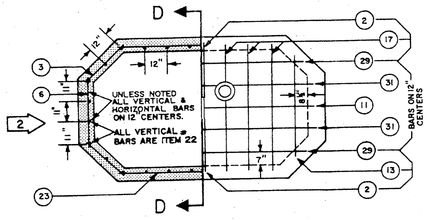

WALL STEEL (TYPICAL)

FLOOR STEEL (TYPICAL)

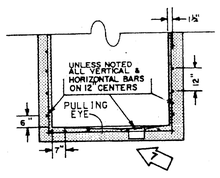

SECTION D-D

REINFORCING BARS

ITEM	LENGTHS FT.	LENGTHS IN.	QUANTITY FLOOR	QUANTITY WALLS	QUANTITY ROOF	QUANTITY TOTAL
2	2	3	2			2
3	2	6		24		24
6	3	3		12	4	16
8	3	9			4	4
11	4	6	2			2
12	4	9			4	4
13	5	0	2			2
16	5	9			4	4
17	6	0	6			6
19	6	6			4	4
20	6	9			4	4
21	7	0			4	4
22	7	10		28		
23	7	6		12	4	16
29	9	0	2			2
31	10	3	2			2

STEEL TO CONFORM TO THE LATEST STANDARD SPECIFICATION FOR DEFORMED BILLET-STEEL BARS FOR CONCRETE REINFORCEMENT.

SEE DETAIL # (19) FOR CONCRETE SPECIFICATION

—TYPE "C" MANHOLE—

DETAIL #②

NOTE: SEE DETAIL # (21) FOR DEEP PANEL WHEN CALLED FOR ON JOB SKETCH.

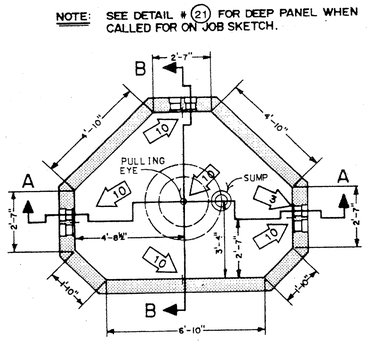

PLAN VIEW

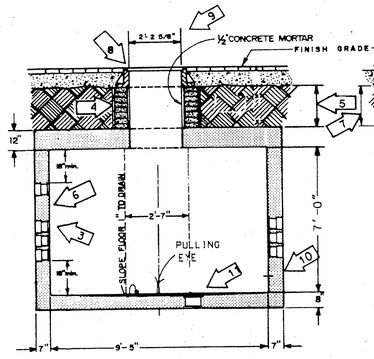

SECTION A-A

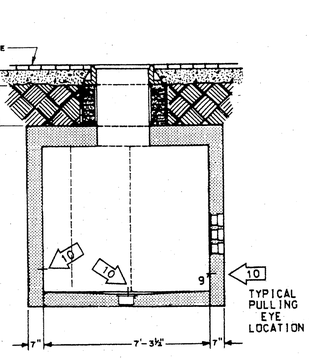

SECTION B-B

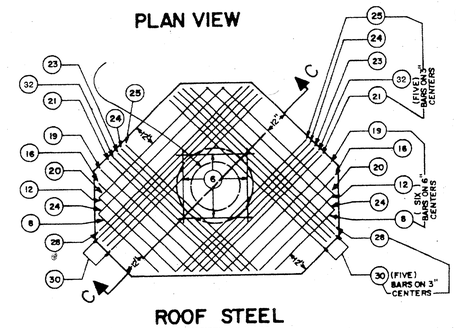

ROOF STEEL

BARS ON SIDES A & B ARE SPACED THE SAME

SIDE-A SIDE-B

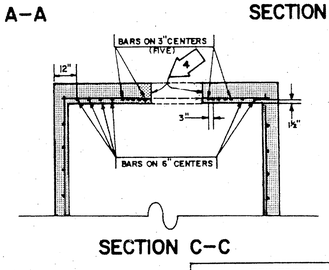

SECTION C-C

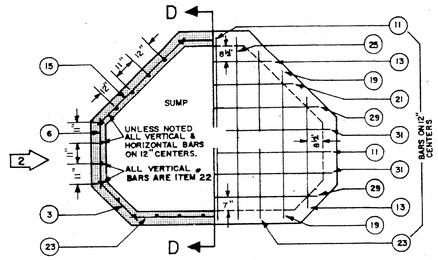

WALL STEEL (TYPICAL)

FLOOR STEEL (TYPICAL)

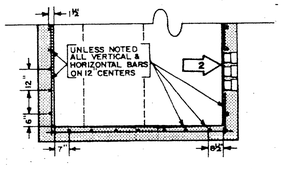

SECTION D-D

REINFORCING BARS

ITEM	LENGTHS FT.	LENGTHS IN.	QUANTITY FLOOR	QUANTITY WALLS	QUANTITY ROOF	QUANTITY TOTAL
2	2	3	1			1
3	2	6		12		12
6	3	3		18	4	22
8	3	9			2	2
11	4	6	3			3
12	4	9			2	2
13	5	0	3			3
15	5	6		12		12
16	5	9			2	2
19	6	6	2		2	4
20	6	9			2	2
21	7	0	1		2	3
22	7	10		30		
23	7	6	2	6	2	10
24	7	9			4	4
25	8	0	2		2	4
28	8	9			2	2
29	9	0	2			2
30	9	3			8	8
31	10	3	2			2

STEEL TO CONFORM TO THE LATEST STANDARD SPECIFICATION FOR DEFORMED BILLET-STEEL BARS FOR CONCRETE REINFORCEMENT.

SEE DETAIL (19) FOR CONCRETE SPECIFICATION

— GENERAL NOTES —

ALL GENERAL NOTES APPLY TO BOTH TYPE "B & C" MANHOLES

1. STANDARD HEADROOM - 7'-0" ALL REINFORCING BARS TO BE # 5 DEFORMED BARS. ALL BARS TO HAVE MINIMUM COVER OF 1½". ALL DIMENSIONS ARE TO ℄ OF BARS. SEE PLANS FOR EXTRA HEADROOM.
2. FIELD CUT STEEL AS REQUIRED FOR TERMINATORS.
3. NUMBER OF TERMINATORS SHOWN ON PLANS INSTALLED IN EACH END PANEL. SEE DETAIL # (8)
4. BLOCK UP CASTING WITH BRICKS TO PAVEMENT GRADE. BRICKWORK TO RECEIVE ½" MORTAR COATING INSIDE & OUTSIDE.
5. 15½" MINIMUM CUSHION.
6. FOR GROUNDING DETAILS SEE DETAIL # (17)
7. A PRECAST REINFORCED CONCRETE NECK MAY BE USED WHEN 28" OR MORE. SEE DETAIL # (13)
8. 4'-4" X 4'-4" X 6" CONCRETE SLAB AROUND M.H. CASTING WHEN INSTALLED IN UNPAVED AREA. SEE DETAIL # (10)
9. 26½" MH CASTING. SEE DETAIL # (15)
10. PULLING EYE. SEE DETAIL # (12)
11. SUMP. SEE DETAIL # (14)

RECORD DRAWING

E5

CD

TU ELECTRIC

REVISION DESCRIPTION	DWG TYPE	UNIT ID	DRAWN	CH.	APP.	APP.

SCALE	NO SCALE	LIST OF DRAWINGS	W.A.	ESTIMATE
DATE	12-12-91			
DWN. MED	CH. JRC	ENG. JRC	APP. JES	APP. PRM

NETWORK UNDERGROUND APPURTENANCE SHEETS
MANHOLE DETAILS

W.A. NO.	DATE

E NUA-1
SHEET NO. 1

NOTE: THIS MANHOLE IS DESIGNED FOR INSTALLATIONS WHERE A MANHOLE IS REQUIRED IN AN EXISTING DUCT LINE.

—SPECIAL "C" MANHOLE—

DETAIL #③

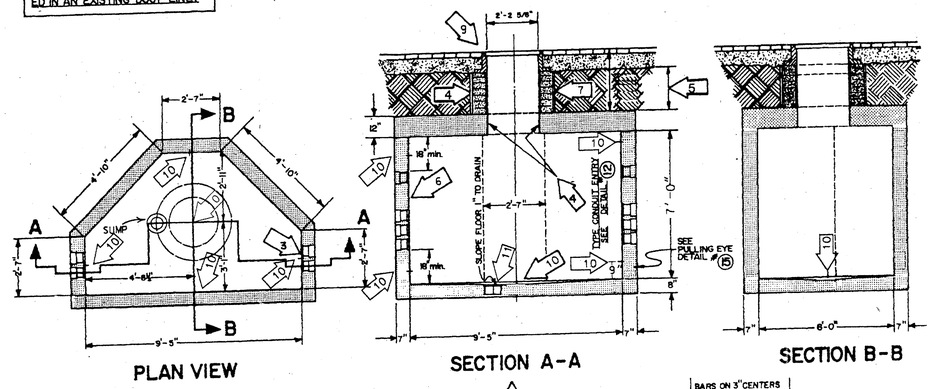

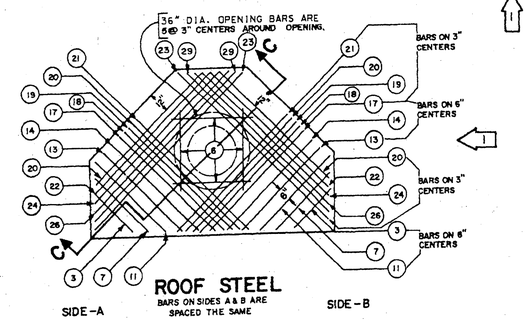

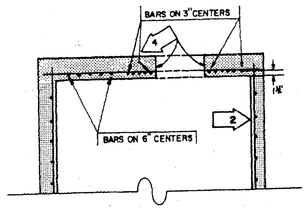

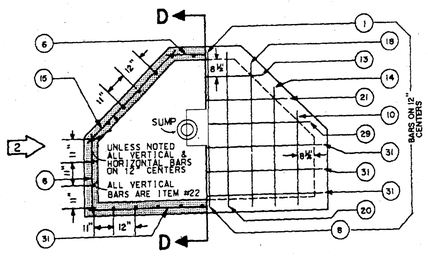

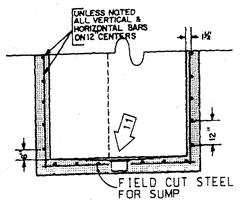

REINFORCING BARS						
ITEM	LENGTHS FT.	LENGTHS IN.	QUANTITY FLOOR	QUANTITY WALLS	QUANTITY ROOF	QUANTITY TOTAL
1	2	0	1			1
3	2	6			2	2
6	3	3		18	4	22
7	3	6			2	2
8	3	9	1			1
10	4	3	2			2
11	4	6			2	2
13	5	0	1		2	3
14	5	3	2		2	4
15	5	6		12		12
17	6	0			2	2
18	6	3	2		2	4
19	6	6			2	2
20	6	9	2		4	6
21	7	0	1		2	3
22	7	10		29	4	33
23	9	3			2	2
24	7	9			2	2
26	8	3			2	2
29	9	0	1		2	3
31	10	3	3	6		9

ALL REINFORCING STEEL, DEFORMED, INTERMEDIATE GRADE, OPEN HEARTH, ASTM. A 615 DESIGNATION.

SEE DETAIL # (19) FOR CONCRETE SPECIFICATIONS

—TYPE "D" MANHOLE—

DETAIL #④

NOTE: SEE DETAIL # (21) FOR DEEP PANEL WHEN CALLED FOR ON SKETCH.

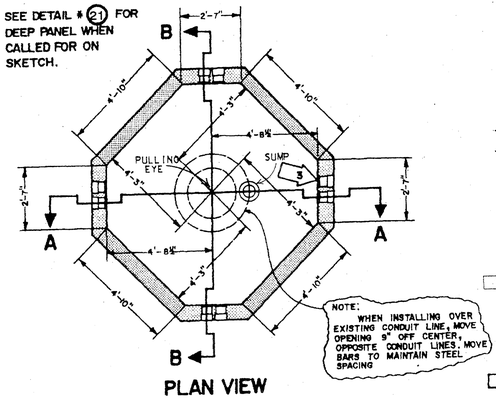

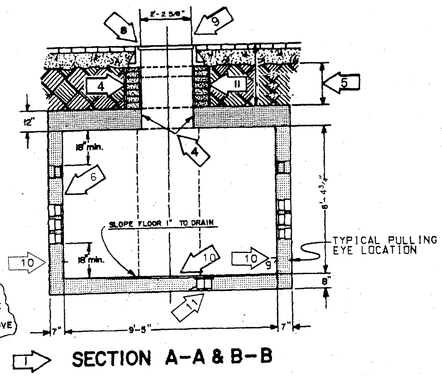

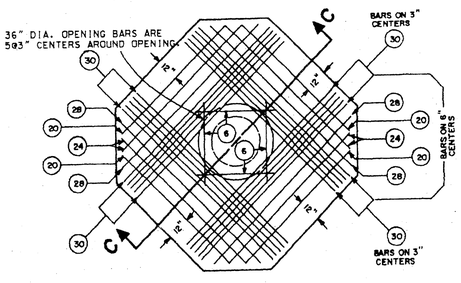

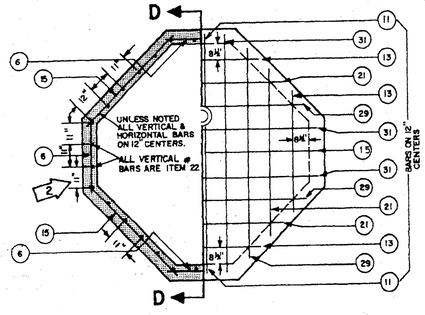

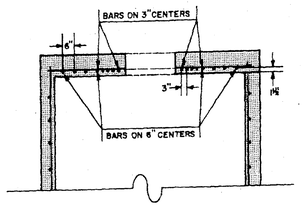

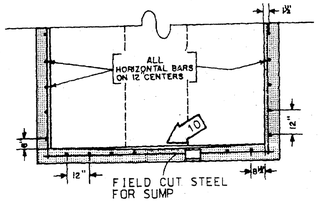

REINFORCING BARS						
ITEM	LENGTHS FT.	LENGTHS IN.	QUANTITY FLOOR	QUANTITY WALLS	QUANTITY ROOF	QUANTITY TOTAL
6	3	3		24	4	28
11	4	6	4			4
13	5	0	4			4
15	5	6		24		24
20	6	9			4	4
21	7	0	4			4
22	7	10		32		32
24	7	9			4	4
28	8	9			4	4
29	9	0	4			4
30	9	3			20	20
31	10	3	5			5

STEEL TO CONFORM TO THE LATEST STANDARD SPECIFICATIONS FOR DEFORMED BILLET-STEEL BARS FOR CONCRETE REINFORCEMENT.

SEE DETAIL # (19) FOR CONCRETE SPECIFICATIONS

— GENERAL NOTES —

ALL GENERAL NOTES APPLY TO BOTH SPECIAL "C" & TYPE "D" MANHOLES

1. STANDARD HEADROOM 7'-0". ALL REINFORCING BARS TO BE #5 DEFORMED BARS. ALL BARS TO HAVE MINIMUM COVER OF 1½". ALL DIMENSIONS ARE TO ℄ OF BARS. SEE PLANS FOR EXTRA HEADROOM.
2. FIELD CUT STEEL AS REQUIRED FOR TERMINATORS.
3. NUMBER OF TERMINATORS SHOWN ON PLANS INSTALLED IN EACH END PANEL. SEE DETAIL # (3)
4. BLOCK UP CASTING WITH BRICKS TO PAVEMENT GRADE. BRICKWORK TO RECEIVE ½" MORTAR COATING INSIDE & OUTSIDE.
5. 15½" MINIMUM CUSHION.
6. FOR GROUNDING DETAILS SEE DETAIL # (17)
7. A PRECAST REINFORCED CONCRETE NECK MAY BE USED WHEN 28" OR MORE. SEE DETAIL # (13)
8. 4'-4" X 4'-4" X 6" CONCRETE SLAB AROUND M.H. CASTING WHEN INSTALLED IN UNPAVED AREA. SEE DETAIL # (10)
9. 26½" MH CASTING. SEE DETAIL # (15)
10. PULLING EYE. SEE DETAIL # (12)
11. SUMP. SEE DETAIL # (14)

RECORD DRAWING

E6

CD

TU ELECTRIC

DRAWN	CH.	APP.	APP.

UNIT ID

DWG TYPE

REVISION DESCRIPTION

ESTIMATE	W.A.	LIST OF DRAWINGS	APP. PRIN.	APP. JES	ENG. JRC	CH. JRC	DWN. MED	DATE 05-12-92

SCALE (H=NO SCALE) (V=NO SCALE)

NETWORK UNDERGROUND APPURTENANCE SHEETS MANHOLE DETAILS

E-NUA-1
SHEET NO. 2

DETAIL #5

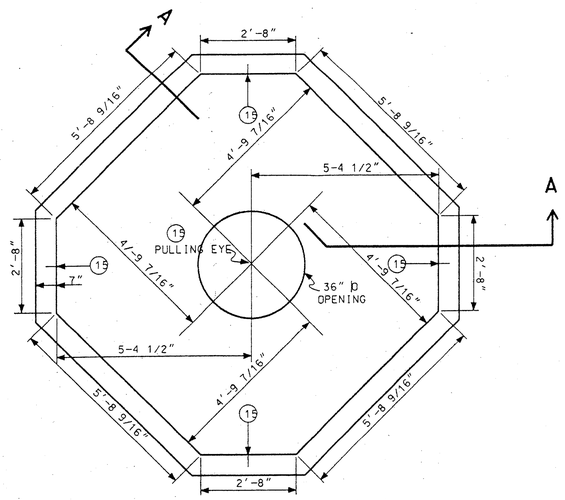

PLAN VIEW

PULLING EYE
PURCHASE FROM BROOKS PRODUCTS.
HEFNER PRECAST.

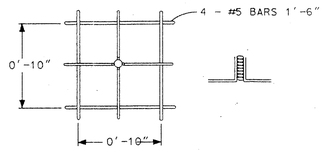

PULLING EYE DETAIL
5 REQUIRED

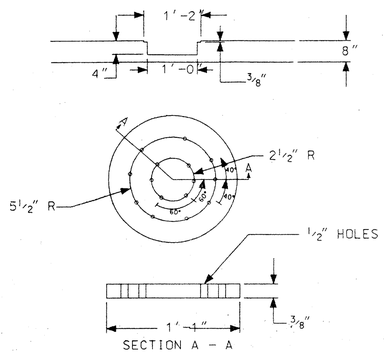

SUMP DETAIL

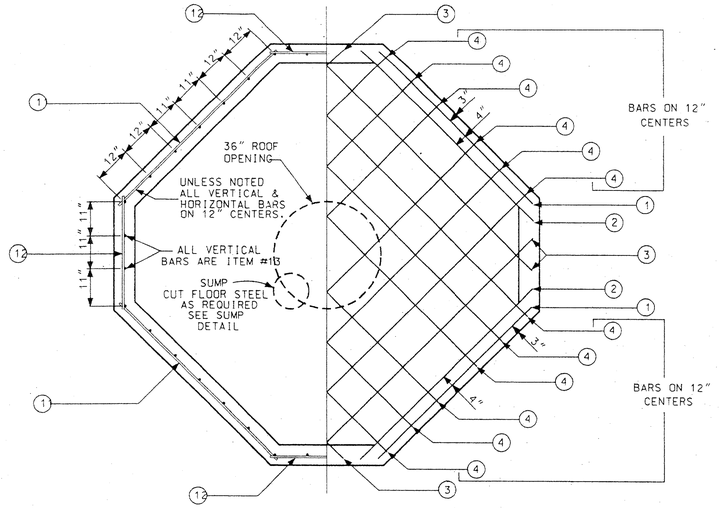

WALL STEEL FLOOR STEEL

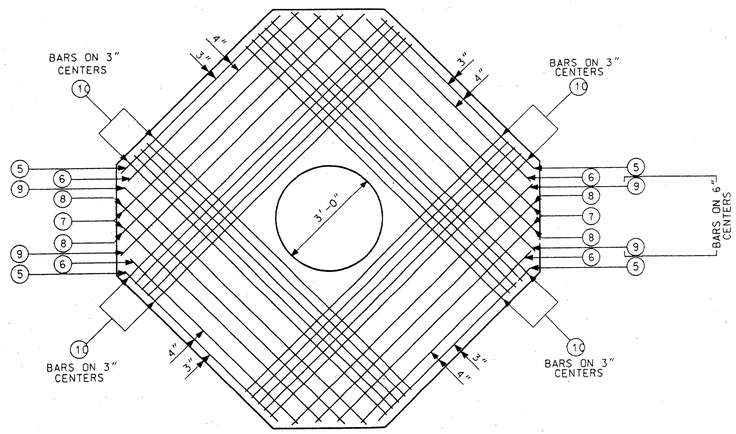

ROOF STEEL

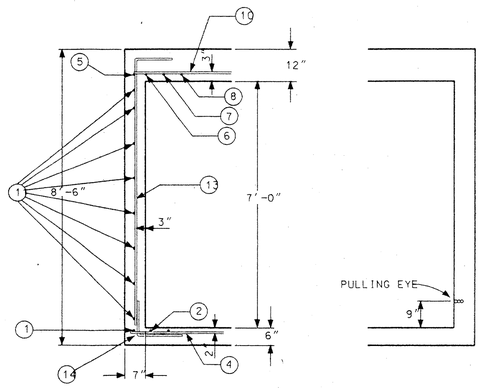

SECTION A - A

"TYPE - 4-WAY"
10'-9" X 10'-9" X 7'-0"

MATERIALS FOR POURED IN PLACE MANHOLE

MARK	LENGTHS FT.	LENGTHS IN.	QUANTITY FLOOR	QUANTITY WALLS	QUANTITY ROOF	TOTAL	SHAPE	SIZE
1	6	1	4			24'-4"	ST.	#5
2	6	10	4			27'-4"	ST.	#5
3	8	10	4			35'-4"	ST.	#5
4	10	3	14			143'-6"	ST.	#5
5	6	1			4	24'-4"	ST.	#5
6	6	10			4	27'-4"	ST.	#5
7	7	10			4	31'-4"	ST.	#5
8	8	10			4	35'-4"	ST.	#5
9	9	10			4	39'-4"	ST.	#5
10	10	3			20	205'-0"	ST.	#5
11	6	3		32		200'-0"	ST.	#5
12	3	2		32		101'-4"	ST.	#5
13	8	9		36		315'-0"	7'-9"	#5
14	3	4	36			120'-0"	2' 1'-4"	#5
15			1	4		5'-0"	PULLING EYE	1 1/4" X 6" BOLT
CONCRETE			1.94 CU.YDS	6.35 CU.YDS	3.85 CU.YDS	11.14 CU.YDS	3000 PSI	

MANHOLE COVER & FRAME TU STD 310-050 1 EA. 3'-0" OPENING
VENDOR: WESTERN IRON WORKS, 21 EAST SIXTH ST. SAN ANGELO TX. 76903
OR: HEFNER PRECAST, DIVISION OF BROOKS PRODUCTS, 2229 NORTH MAIN, CLEBURNE TX. 76031

STEEL TO CONFORM TO THE LATEST STANDARD SPECIFICATION FOR DEFORMED BILLET-STEEL BARS FOR CONCRETE REINFORCEMENT.

SEE DETAIL #9 FOR CONCRETE SPECIFICATION

GENERAL NOTES SIMILAR TO TYPE "D" MANHOLE. SHEET #2.

RECORD DRAWING E7

CD

TU ELECTRIC

REVISION DESCRIPTION	DRAWN	CH.	APP.	APP.

UNIT ID

DWG TYPE

NETWORK UNDERGROUND APPURTENANCE SHEETS MANHOLE DETAILS

LIST OF DRAWINGS

SCALE (H=) (V=1/2"=1'-)

ESTIMATE	W.A.	DATE	W.A.	APP. PRN	APP. JES	ENG. JRC	CH. JRC	DWN. MED	DATE 05-12-92

E NUA-1
SHEET NO. 3

E NUA-1
SHEET NO. 4

DETAIL # 6

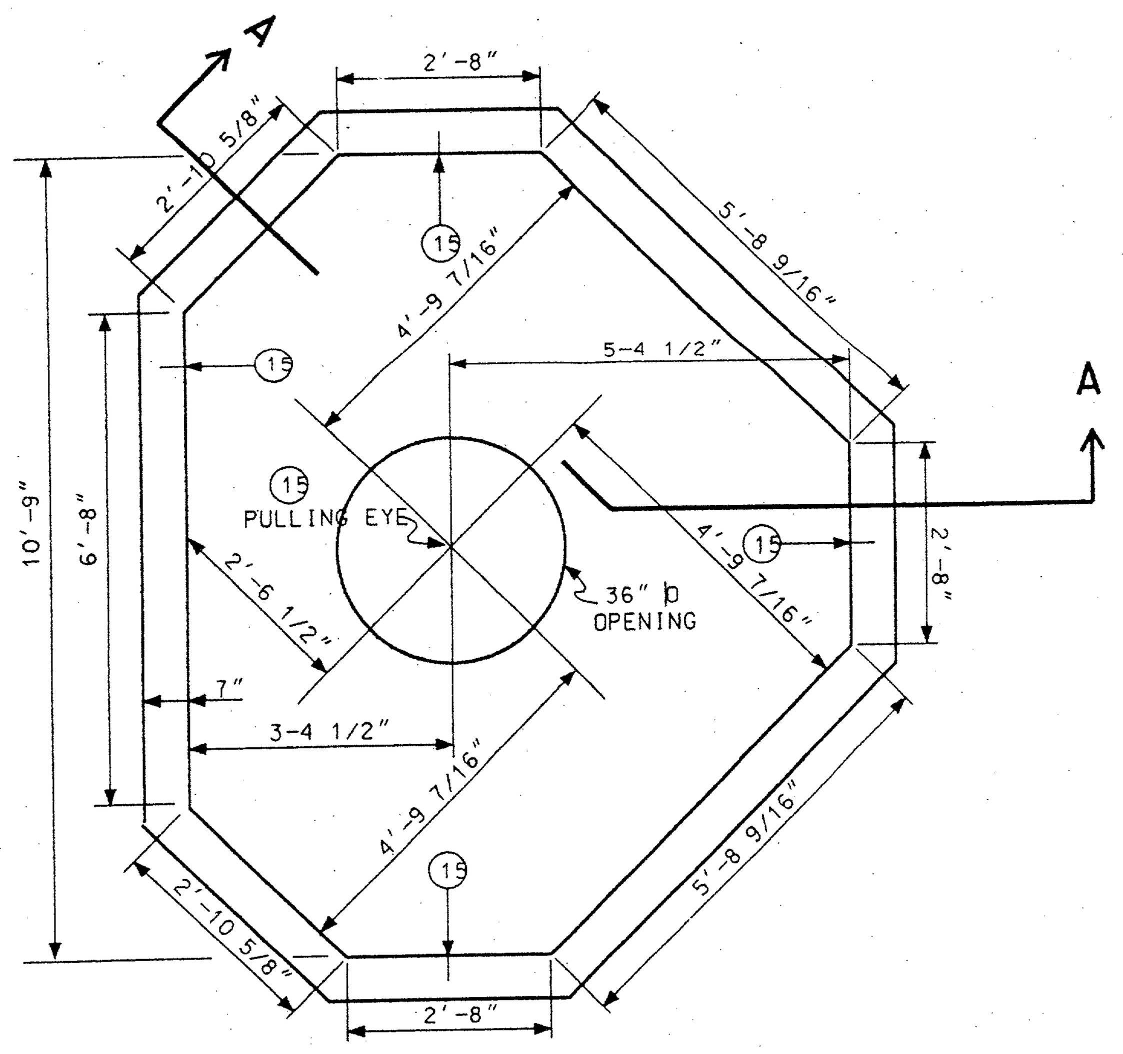

PLAN VIEW

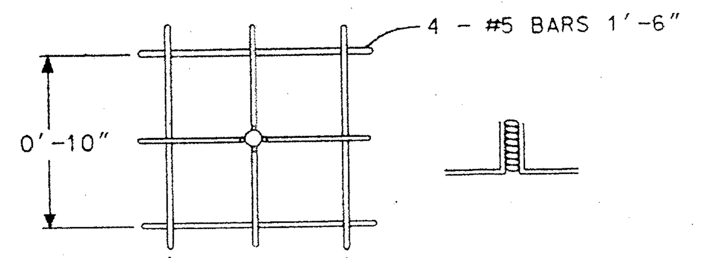

PULLING EYE DETAIL
5 REQUIRED

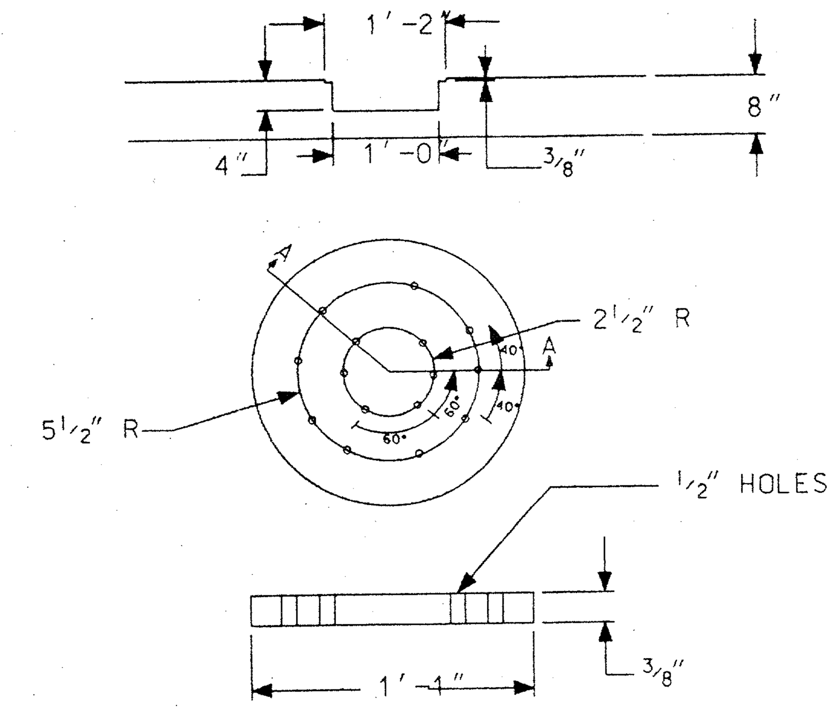

SUMP DETAIL

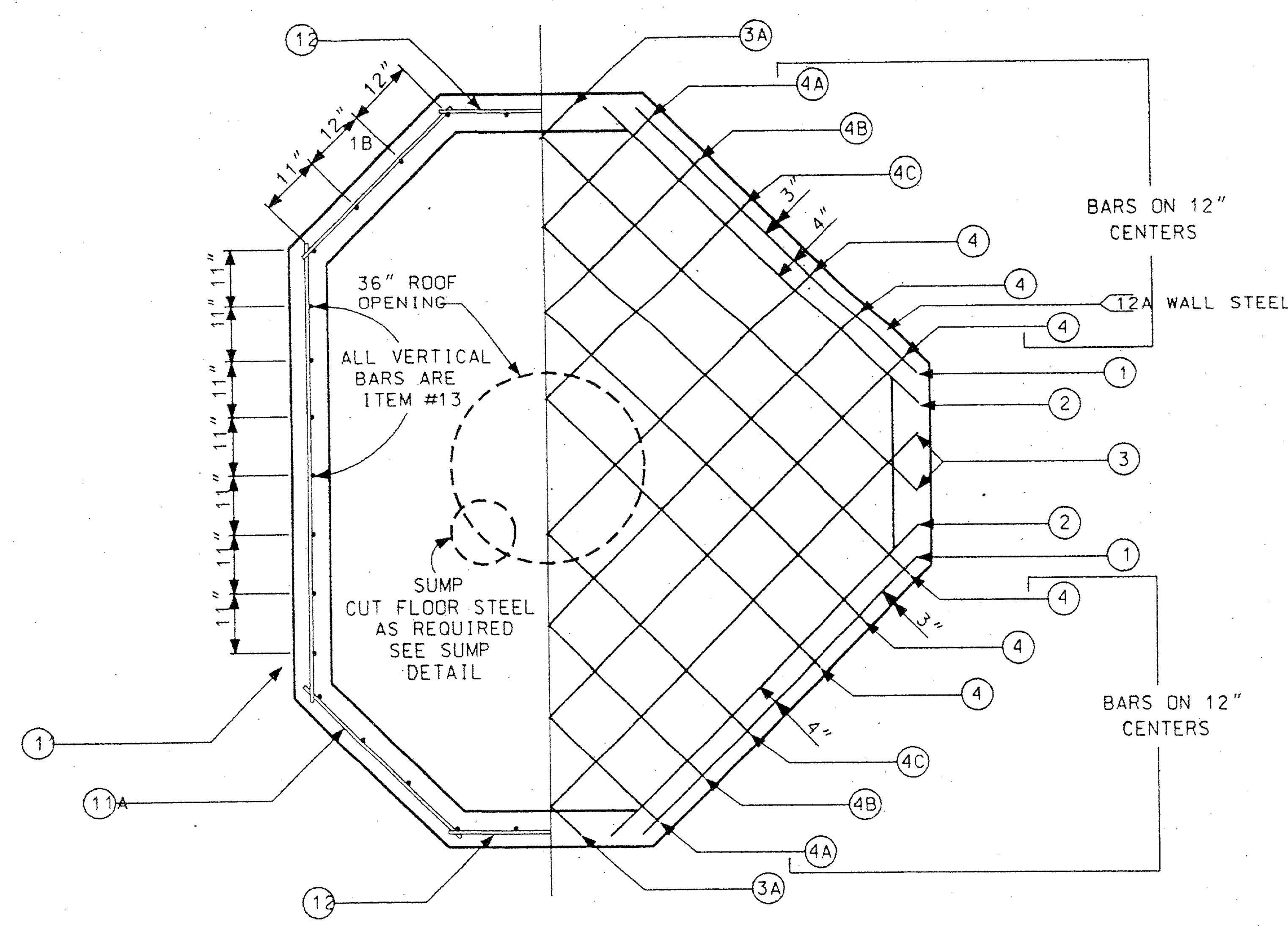

WALL STEEL — FLOOR STEEL

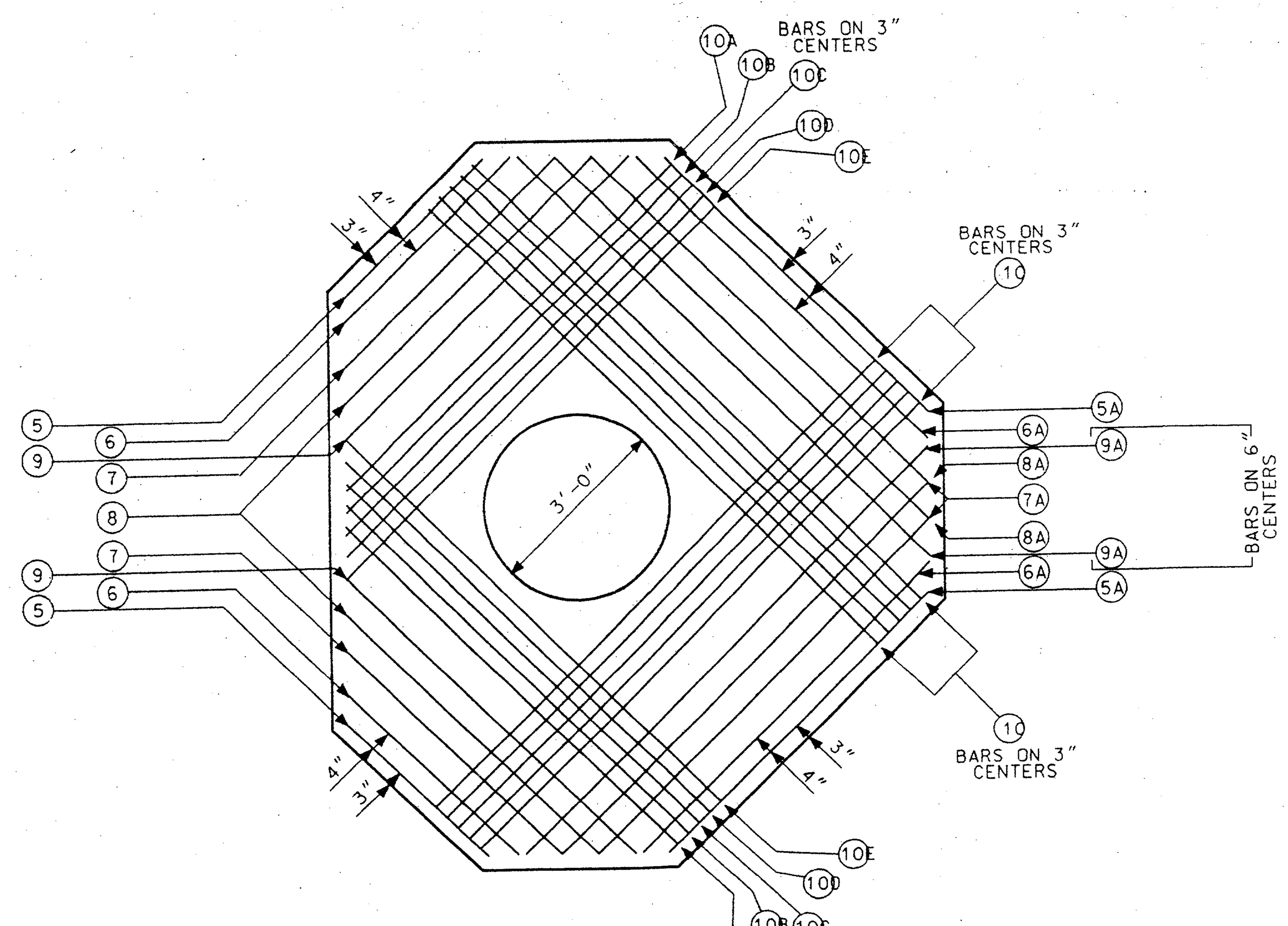

ROOF STEEL

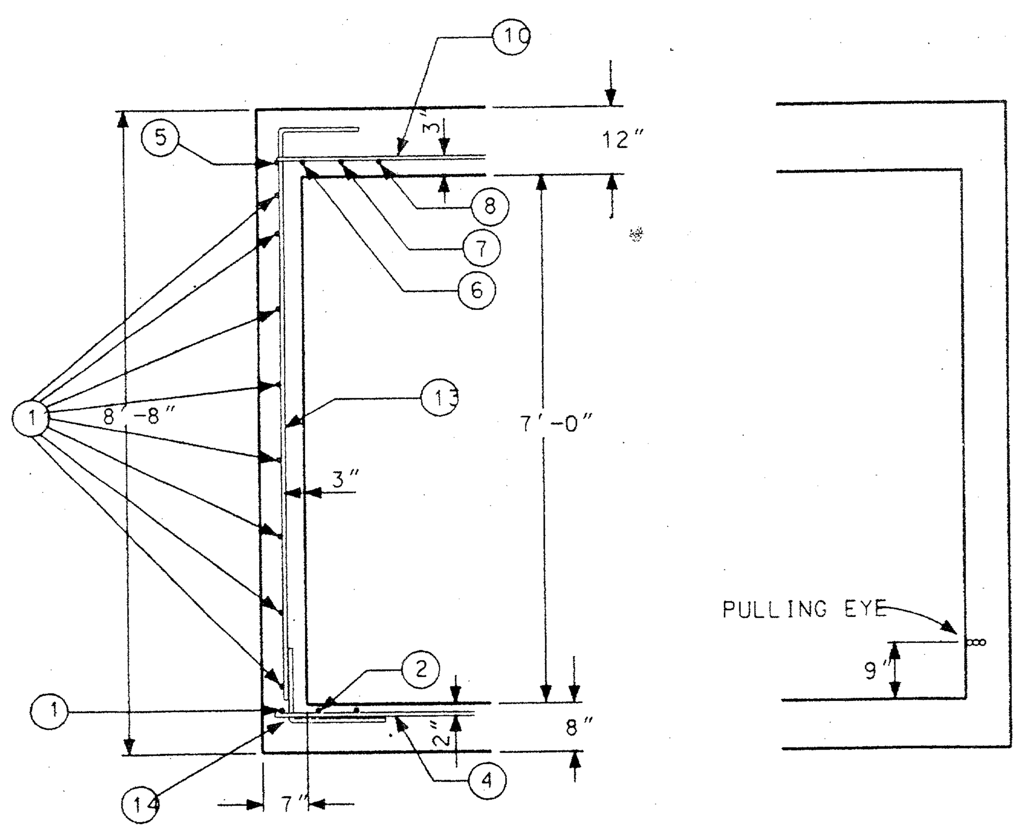

SECTION A - A

"TYPE - 3-WAY"
10'-9" X 8'-9" X 7'-0"

MATERIALS FOR POURED IN PLACE MANHOLE

MARK	LENGTHS FT.	LENGTHS IN.	QUANTITY FLOOR	QUANTITY WALLS	QUANTITY ROOF	TOTAL	SHAPE	SIZE
1	6	1	2			12'-2"	ST.	#5
1A	3	1	2			6'-2"	ST.	#5
1B	3	6	2			7'-0"	ST.	#5
1C	7	3	1			7'-3"	ST.	#5
2	6	10	2			13'-8"	ST.	#5
2A	3	1	2			6'-2"	ST.	#5
2B	3	3	2			6'-6"	ST.	#5
2C	7	5	1			7'-5"	ST.	#5
3	8	10	2			17'-8"	ST.	#5
3A	5	11	2			11'-10"	ST.	#5
4	10	3	6			61'-6"	ST.	#5
4A	7	7	2			15-2'	ST.	#5
4B	8	8	2			17'-4"	ST.	#5
4C	9	7	2			19'-2"	ST.	#5
5	3	1			2	6'-2"	ST.	#5
5A	6	0			2	12'-0"	ST.	#5
6	3	10			2	7'-8"	ST.	#5
6A	6	7			2	13'-2"	ST.	#5
7	4	10			2	9'-8"	ST.	#5
7A	7	8			2	15'-4"	ST.	#5
8	5	8			2	11'-4"	ST.	#5
8A	8	6			2	17'-0"	ST.	#5
9	6	6			2	13'-0"	ST.	#5
9A	9	5			2	18'-10"	ST.	#5
10	10	3			10	102'-6"	ST.	#5
10A	7	6			2	15'-0"	ST.	#5
10B	7	9			2	15'-6"	ST.	#5
10C	8	0			2	16'-0"	ST.	#5
10D	8	3			2	16'-6"	ST.	#5
10E	8	6			2	17'-0"	ST.	#5
11	7	4		8		58'-8"	ST.	#5
11A	3	6		16		56'-0"	ST.	#5
12	3	2		24		76'-0"	ST.	#5
12A	6	1		16		97'-4"	ST.	#5
13	8	9		36		315'-0"	ST.	#5
14	3	4	36			120'-0"	2' └ 1'-4"	#5
15			1	4		5'-0"	PULLING EYE	1 1/4" X 6" BOLT
CONCRETE			1.94 CU.YDS	5.35 CU.YDS	3.85 CU.YDS	11.14 CU.YDS	3000 PSI	

MANHOLE COVER & FRAME TU STD 310-050 1 EA. — 3'-0" OPENING
VENDOR: WESTERN IRON WORKS, 21 EAST SIXTH ST. SAN ANGELO TX. 76903
OR: HEFNER PRECAST, DIVISION OF BROOKS PRODUCTS, 2229 NORTH MAIN, CLEBURNE TX. 76031

STEEL TO CONFORM TO THE LATEST STANDARD SPECIFICATION FOR DEFORMED BILLET-STEEL BARS FOR CONCRETE REINFORCEMENT

SEE DETAIL # 19 FOR CONCRETE SPECIFICATION.

GENERAL NOTES SIMILAR TO TYPE "C" MANHOLE, SHEET #1

RECORD DRAWING E8

CD

TU ELECTRIC

DRAWN	CH.	APP.	APP.

NO.	DATE	REVISION DESCRIPTION

DWG TYPE — UNIT ID — ESTIMATE — W.A. — LIST OF DRAWINGS

NETWORK UNDERGROUND APPURTENANCE SHEETS MANHOLE DETAILS

SCALE (H=) (V=1/2"=1'-)

DATE 05-12-92 | DWN. MED | CH. JRC | ENG. JRC | APP. JES | APP. PRN | W.A.

E NUA-1
SHEET NO. 4

DETAIL # 7

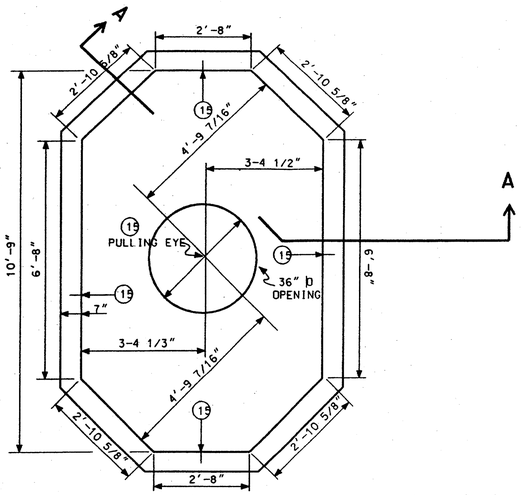

PLAN VIEW

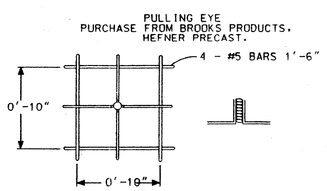

PULLING EYE DETAIL
5 REQUIRED

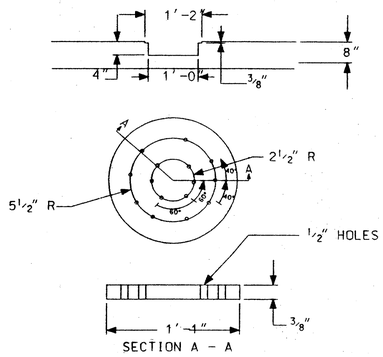

SUMP DETAIL

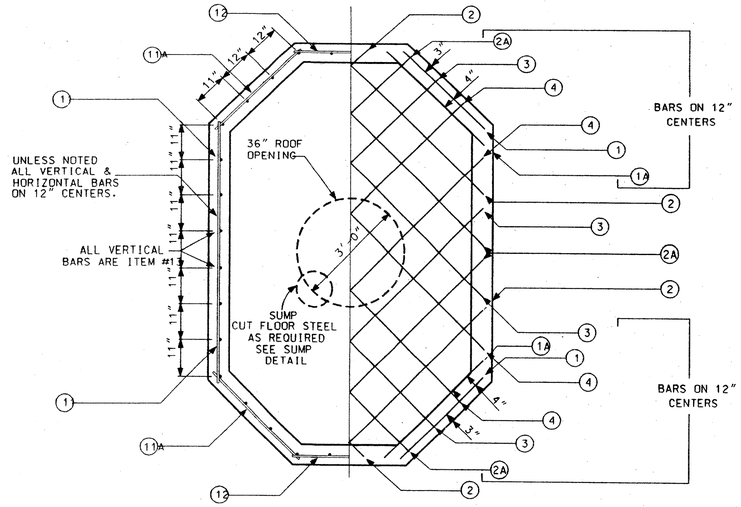

WALL STEEL FLOOR STEEL

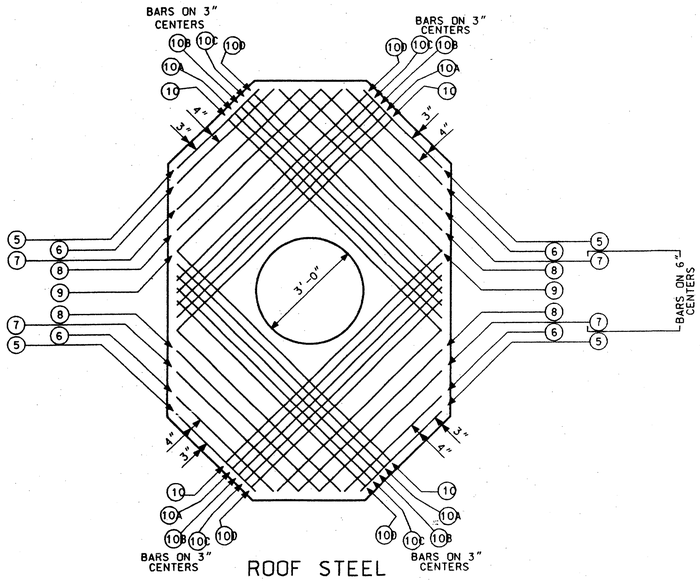

ROOF STEEL

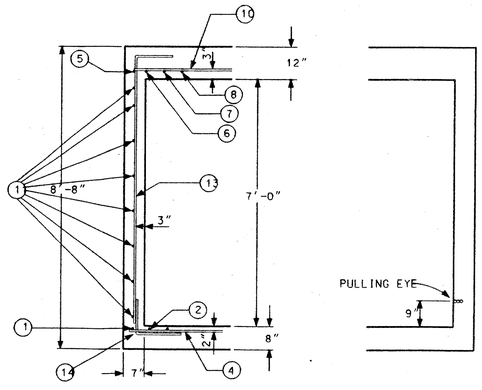

SECTION A - A

"TYPE - 2-WAY"
10'-9" X 6'-9" X 7'-0"

MATERIALS FOR POURED IN PLACE MANHOLE

MARK	LENGTHS FT.	LENGTHS IN.	QUANTITY FLOOR	QUANTITY WALLS	QUANTITY ROOF	TOTAL	SHAPE	SIZE
1	3	3	4			13'-0"	ST.	#5
1A	3	10	4			15'-4"	ST.	#5
2	5	10	4			23'-4"	ST.	#5
2A	7	7	4			30'-4"	ST.	#5
3	8	7	4			34'-4"	ST.	#5
4	9	7	4			38'-4"	ST.	#5
5	3	2			4	12'-8"	ST.	#5
6	3	10			4	15'-4"	ST.	#5
7	4	10			4	19'-4"	ST.	#5
8	5	8			4	22'-8"	ST.	#5
9	6	6			4	26'-0"	ST.	#5
10	8	6			4	34'-0"	ST.	#5
10A	8	3			4	33'-0"	ST.	#5
10B	8	0			4	32'-0"	ST.	#5
10C	7	9			4	31'-0"	ST.	#5
10D	7	6			4	30'-0"	ST.	#5
11	7	4		16		117'-4"	ST.	#5
11A	3	5		32		109'-4"	ST.	#5
12	3	2		16		50'-8"	ST.	#5
13	8	9		36		315'-0"	7'-3" R	#5
14	3	4	36		4	120'-0"	2' 1'-4"	#5
15			1	4		5'-0"	PULLING EYE	11"x 6" Ø
CONCRETE			1.94 CU.YDS	5.35 CU.YDS	3.85 CU.YDS	11.14 CU.YDS	3000 PSI	

MANHOLE COVER & FRAME TU STD 310-050 1 EA. 3'-0" OPENING
VENDOR: WESTERN IRON WORKS, 21 EAST SIXTH ST. SAN ANGELO TX. 76903
OR: HEFNER PRECAST, DIVISION OF BROOKS PRODUCTS, 2229 NORTH MAIN, CLEBURNE TX. 76031

STEEL TO CONFORM TO THE LATEST STANDARD SPECIFICATION FOR DEFORMED BILLET-STEEL BARS FOR CONCRETE REINFORCEMENT.

SEE DETAIL #09 FOR CONCRETE SPECIFICATION

GENERAL NOTES SIMILAR TO TYPE "B" MANHOLE, SHEET #1.

RECORD DRAWING E9

CD

TU ELECTRIC

REVISION DESCRIPTION	DATE	APP.
DRAWN		
CH.		
APP.		

UNIT ID
DWG TYPE

ESTIMATE
W.A.
LIST OF DRAWINGS
SCALE (H=) (V=1/2"=1'-)
DATE 05-12-92

NETWORK UNDERGROUND
APPURTENANCE SHEETS
MANHOLE DETAILS

NO.	DATE
W.A.	
APP. PRN	
APP. JES	
ENG. JRC	
CH. JRC	
DWN. WED	

E NUA-1
SHEET NO. 5

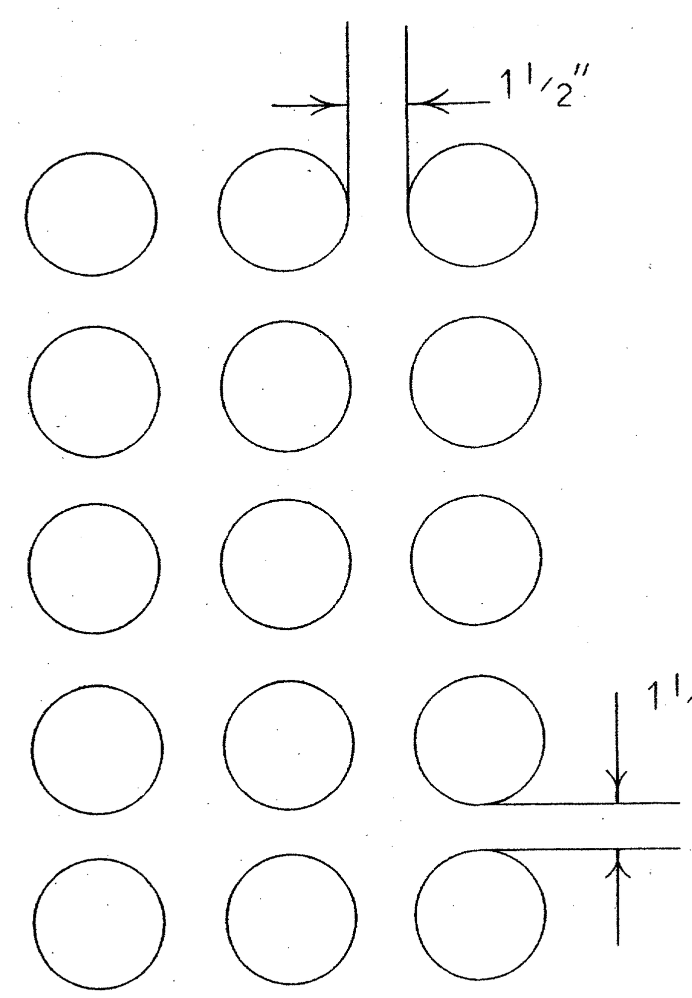

**15 - 5" OR 6"
TERMINATOR INSTALLATION
IN MANHOLES**

SEE JOB SKETCH FOR
NUMBER OF TERMINATORS
TO BE INSTALLED

DETAIL # (8)

NOTE: SEE DETAIL # (31) FOR CONCRETE SPECIFICATION

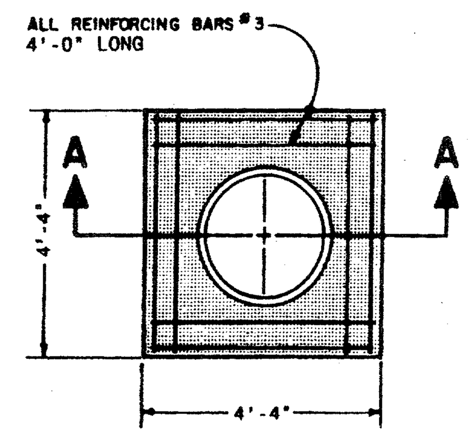

PLAN

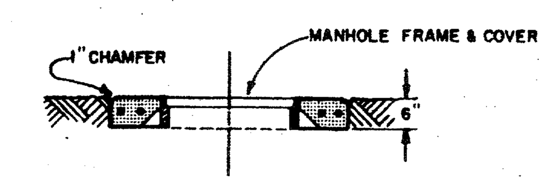

SECTION A-A

**— CONCRETE SLAB FOR MANHOLE —
CASTING**

DETAIL # (11)

DETAIL # (24)

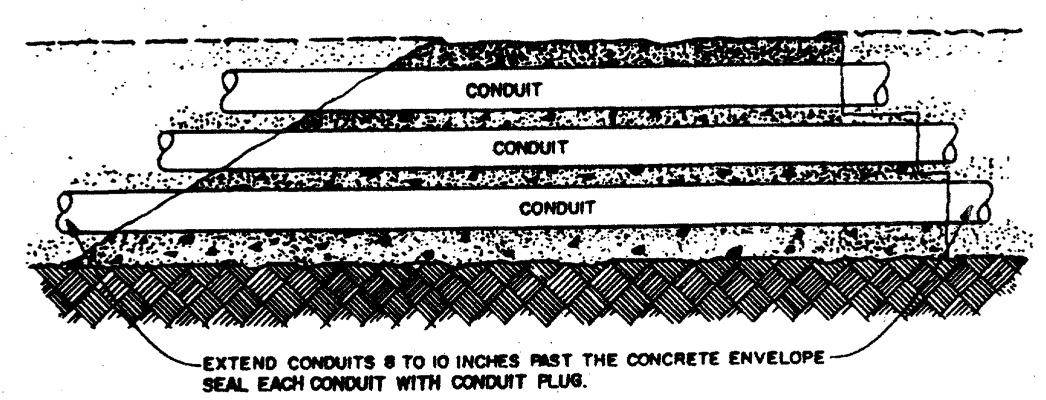

**— SLOPED AND STAIR STEPPED —
COLD JOINTS**

DETAIL # (28)

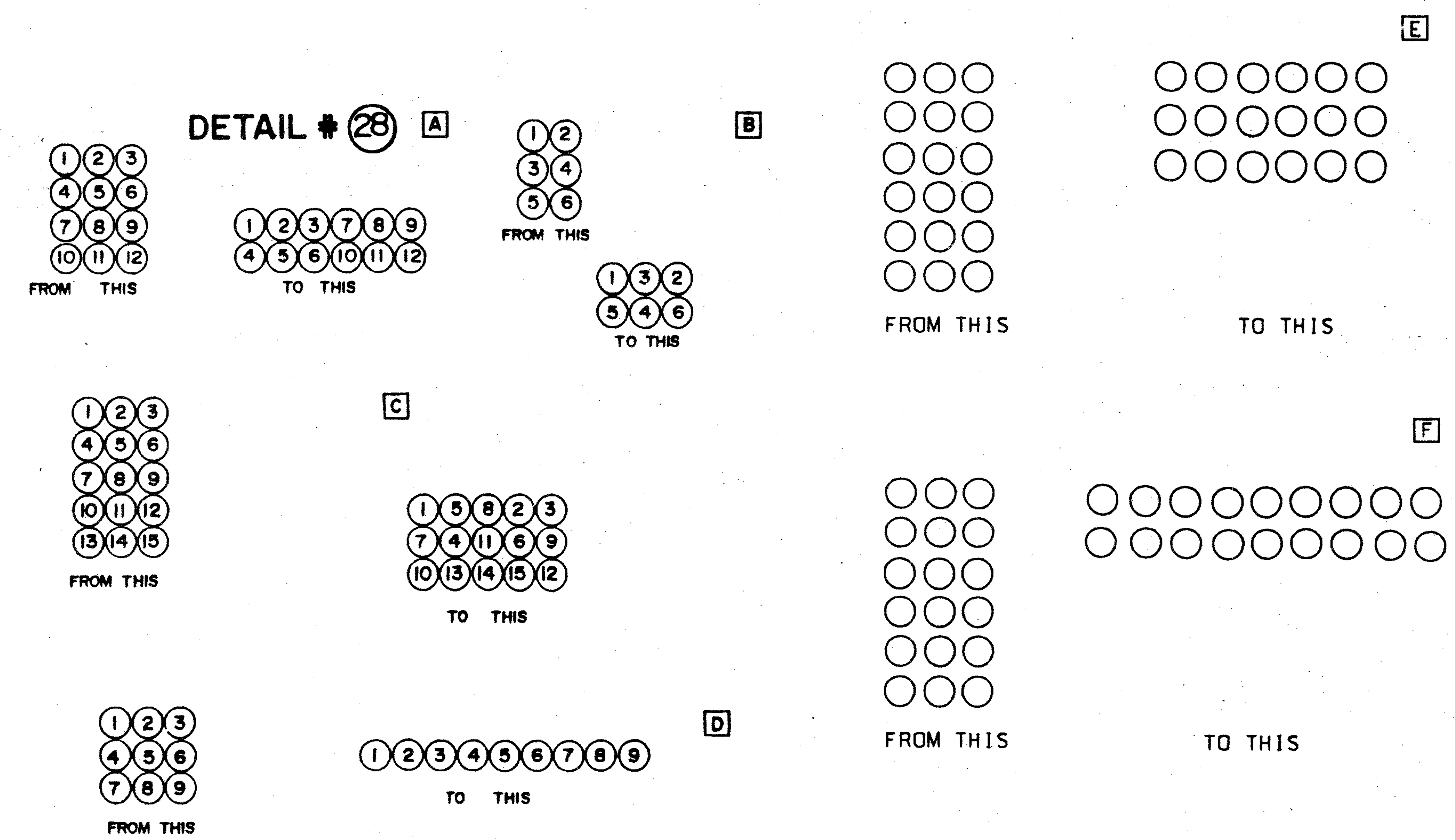

CONDUIT TRANSITION DETAILS

RECORD
DRAWING

E10

CD

TU ELECTRIC

NO.	DATE	REVISION DESCRIPTION	DRAWN	CH.	APP.	APP.

UNIT ID | DWG TYPE | ESTIMATE | W.A. | LIST OF DRAWINGS | SCALE (H #0 SCALE) (V #0 SCALE)

NETWORK UNDERGROUND
APPURTENANCE SHEETS
MISCELLANEOUS DETAILS

DATE 05-12-92 | DWN. MED | CH. JRC | ENG. JRC | APP. JES | APP. PRN | W.A.

E-NUA-1
SHEET NO. 6

DETAIL # (12)

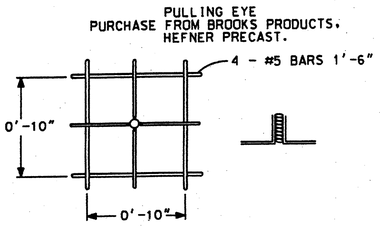

PULLING EYE DETAIL

DETAIL # (14)

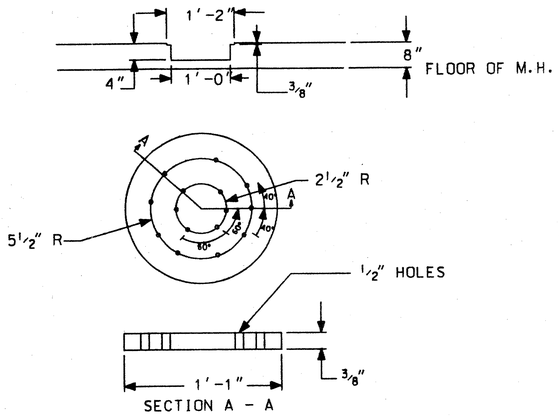

SUMP DETAIL

DETAIL # (15)

~~26½"~~ 36" MH COVER AND FRAME

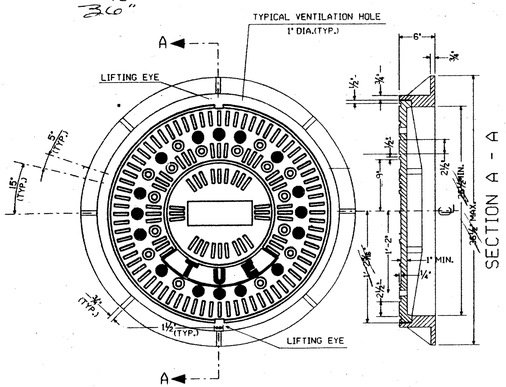

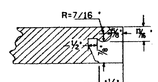

LIFTING EYE SECTION DETAIL

GENERAL NOTES

BEARING SURFACE BETWEEN COVER AND FRAME SHALL BE MACHINED.

COVER AND FRAME SHALL BE CONSTRUCTED TO H-20 TRAFFIC LOADING.

COVER AND FRAME SHALL BE CONSTRUCTED OF GRAY CAST IRON.

MANHOLE COVER AND FRAME SHALL NOT EXCEED 700 lbs.

DETAIL # (16)

— FABRICATION & INSTALLATION DETAILS —

FOR SIDEWALK MANHOLE COVER

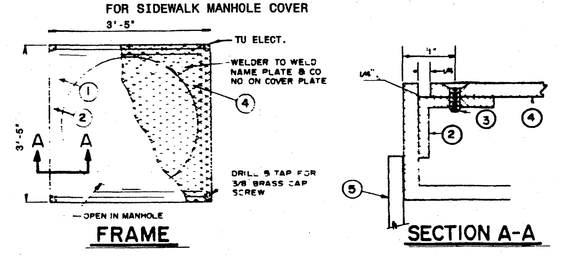

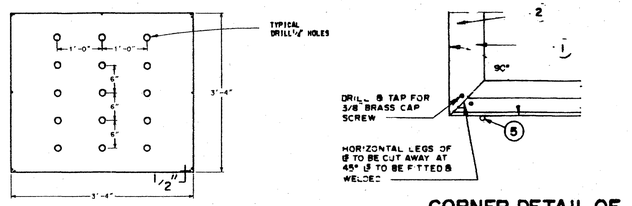

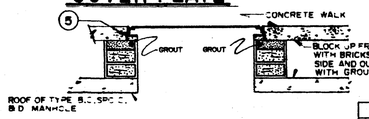

TYPICAL INSTALLATION

BILL OF MATERIAL			
ITEM	QUAN	DESCRIPTION	STK. NO.
1	4	2½" x 2½" x ¼" x 3'-5" LONG	
2	4	1¾" x 1¾" x ¾" x 3'-4" LONG	
3	2	⅜" x 1½" x BRASS CAP SCREWS FLAT HEADS	
4	1	3'-4" x 3'-4" x 3/16" NO SKID STEEL PLATE	
5	4	#3 BAR - 2'-9"	

DETAIL # (17)

TYPICAL MANHOLE SHOWING GROUNDING DETAILS

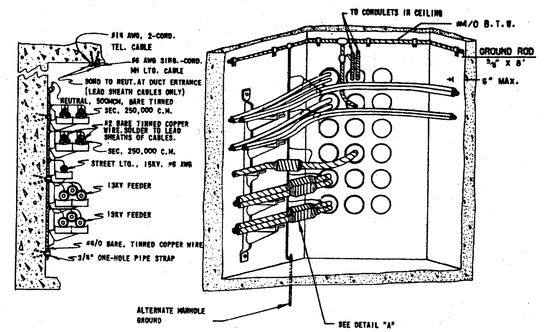

GROUND RODS FURNISHED BY TU ELECTRIC AND INSTALLED BY CONTRACTOR

DETAIL "A"

DETAIL # (13)

~~26½"~~ 36" NECK DETAIL (PRECAST)

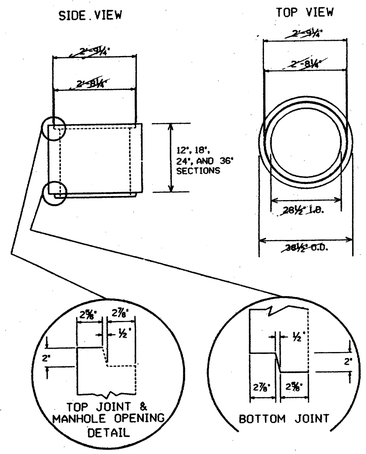

RECORD DRAWING E11

CD

TU ELECTRIC

DRAWN	CH.	APP.	APP.			
UNIT ID						
DWG TYPE						

REVISION DESCRIPTION

W.A.	ESTIMATE					
NO.						
DATE						

W.A.	LIST OF DRAWINGS					
APP. PRN						
APP. JES						
ENG. JRC						
CH. JRC						
DWN. MED						
DATE 05-12-92						

SCALE (H=NO SCALE) (V=NO SCALE)

NETWORK UNDERGROUND APPURTENANCE SHEETS MISCELLANEOUS DETAILS

E-NUA-1
SHEET NO. 7

TYPICAL CONDUIT INSTALLATION FOR PVC ENCASED MAJOR CONDUIT LINE

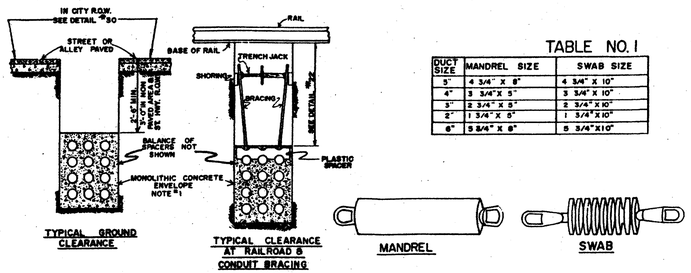

TABLE NO. I

DUCT SIZE	MANDREL SIZE	SWAB SIZE
5"	4 3/4" X 8"	4 3/4" X 10"
4"	3 3/4" X 5"	3 3/4" X 10"
3"	2 3/4" X 5"	2 3/4" X 10"
2"	1 3/4" X 5"	1 3/4" X 10"
6"	5 3/4" X 8"	5 3/4" X 10"

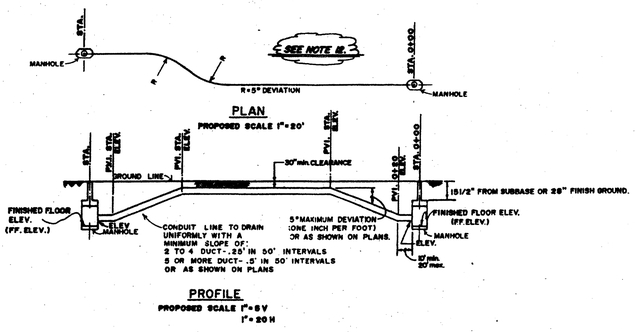

NOTES:

1. ALL SECTIONS OF THE CONDUIT WILL BE RUN IN A STRAIGHT LINE AS CONDITIONS WILL PERMIT. DEVIATIONS WILL BE LAID OUT BY THE POWER COMPANY ENGINEER.
2. THE CONDUIT & FITTINGS WILL BE COATED LIBERALLY WITH PVC CEMENT. PUSH CONDUIT AND FITTING TOGETHER UNTIL CONDUIT BUTTS AGAINST FITTING SHOULDER. TWIST CONDUIT 1/4 TURN TO ASSURE SMOOTH SPREADING OF CEMENT. NORMAL MIN. COVER TO BE 30".
3. WHEN COMPLETE, EACH CONDUIT OF A MAIN DUCT LINE WILL HAVE A MANDREL AND SWAB PULLED THROUGH THE ENTIRE LENGTH & EACH CONDUIT OF A LATERAL LINE WILL HAVE A SWAB PULLED THROUGH THE ENTIRE LENGTH TO CHECK FOR BLOCKAGES OR OTHER UNDESIRABLE CONDITIONS. SEE TABLE NO. I FOR MANDREL AND SWAB SIZE FOR CORRESPONDING CONDUIT SIZE.
4. ALL DITCH CUTS WILL BE IN ACCORDANCE WITH EXISTING SAFETY REGULATIONS IN EFFECT.
5. ALL CONDUIT RUNS ON I.H. & STATE HWY. R.O.W. WILL REQUIRE A MINIMUM OF 6" CONCRETE COVER FROM THE UPPERMOST DUCT. AND MIN. 36" COVER, FROM FINISH GRADE.
6. SEE PLANS FOR CONDUIT ARRANGEMENT.
7. FOR NUMBER, FORMATION, AND SIZE OF CONDUITS SEE JOB PLANS.
8. HIGH EARLY STRENGTH CEMENT PROHIBITED.
9. SHOW DITCH ELEVATION @ 50' INTERVALS & EACH GRADE CHANGE AND AT MANHOLE ENTRANCE.
10. SHOW MANHOLE FINISH FLOOR ELEVATION.
11. ALL CONDUIT TO BE TYPE II D.B. UNLESS OTHERWISE NOTED ON PLANS.
12. STATION EVERY 100'H. IN PLAN VIEW AND EVERY 50'H. WITH ELEVATION IN PROFILE PLUS STATION AND ELEVATION AT EACH GRADE CHANGE.

DETAIL #18

SECTIONS OF TYPICAL FORMATION

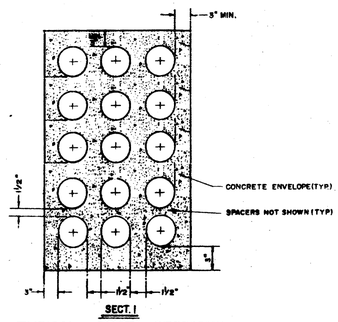

TYPICAL DUCT SECTIONS

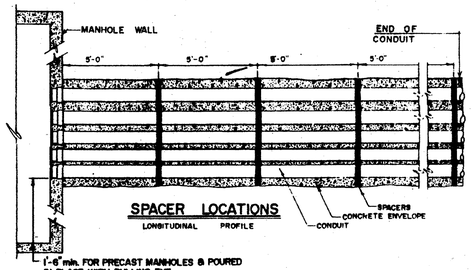

TABLE 2

CONDUIT SIZE	OUTSIDE DIAMETER	TYPE				
2"	2.38"	PVC				
3"	3.50"	PVC				
4"	4.50"	PVC				
5"	5.56"	PVC				
6"	6.56"	PVC				
PVC CEMENT						

DETAIL #20

SEQUENCE OF CONSTRUCTION

STEP 1 : SUFFICIENT CONCRETE WILL BE REMOVED TO PERMIT TRENCH EXCAVATION.

STEP 2 : UPON COMPLETION OF THE INSTALLATION OF THE CONDUIT LINE, THE TRENCH WILL BE BACKFILLED AND COMPACTED TO THE REQUIRED DENSITY UP TO THE BASE OF PAVEMENT.

STEP 3 : THE CONCRETE PAVEMENT WILL BE SAWED TO A DEPTH OF APPROXIMATELY ONE THIRD OF THE DEPTH OF PAVEMENT, PARALLEL TO THE LINE OF TRENCH, ONE FOOT BACK OF SOLID GROUND. PAVING BREAKERS CAN THEN BE USED TO BREAK THE EXCESS CONCRETE.

STEP 4 : THE EXPOSED EDGES OF THE CONCRETE WILL BE CLEANED SO A GOOD BOND CAN BE OBTAINED WHEN VOID IS FILLED.

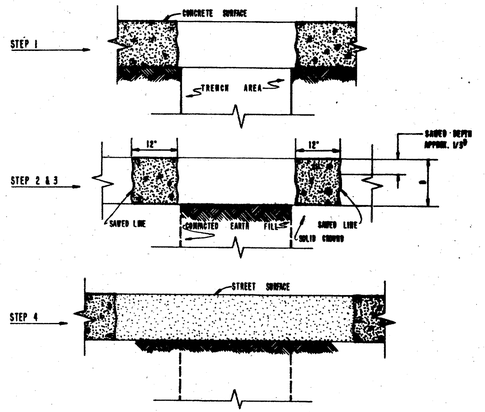

NOTE: ASPHALT DRIVING SURFACES;
SEQUENCE OF CONSTRUCTION ON CONCRETE STREETS WITH ASPHALT DRIVING SURFACES WILL BE THE SAME AS SEQUENCE, EXCEPT STEP 3, THE ASPHALT WILL BE CUT IN A STRAIGHT LINE USING METHODS ACCEPTABLE WITH THE CITY SPECIFICATIONS. SAWING OF THE CONCRETE WILL NOT BE REQUIRED.

STREET BREAKING AND REPLACEMENT DETAILS

DETAIL #19

CONCRETE SPECIFICATION

I. GENERAL

THESE SPECIFICATIONS APPLY TO MANHOLE, VAULT, AND DUCT LINE CONSTRUCTION ON THE UNDERGROUND SYSTEMS IN THE DOWNTOWN NETWORK. THE CONCRETE SHALL BE OF ONE OF THE CLASSES SPECIFIED ON THE DRAWINGS FOR THE TYPE OF WORK UNDER CONSTRUCTION. THE RATIO OF SAND TO GRAVEL SHALL BE USED SO AS TO OBTAIN AS DENSE AND ECONOMICAL CONCRETE AS POSSIBLE WITH THE MATERIALS AVAILABLE AND FOR THE CLASS OF WORK UNDER CONSTRUCTION, BUT IN NO CASE SHALL THE RATIO OF CEMENT TO THE INERT CONTENTS BE LESS THAN THE CLASS OF CONCRETE SPECIFIED.

II. SPECIFICATIONS FOR MATERIALS

A. CEMENT: THE CEMENT SHALL CONFORM TO "STANDARD SPECIFICATIONS FOR PORTLAND CEMENT" ASTM C-150 FOR TYPE I NORMAL PORTLAND CEMENT AND TYPE III, HIGH-EARLY-STRENGTH PORTLAND CEMENT. THE CEMENT SHALL BE PROPERLY PROTECTED FROM THE WEATHER UNTIL USED AND SHALL BE DRY AND FREE FROM LUMPS WHEN PLACED IN THE MIXER.

B. SAND: THE SAND SHALL CONSIST OF HARD SILICEOUS MATERIAL, FREE FROM VEGETABLE MATTER, ORGANIC MATTER, OR SURFACE COATING, THAT IS INJURIOUS TO CONCRETE. THE GRADING SHALL BE GRADED IN SIZE FROM ONE-FOURTH INCH DOWN, WITH NOT MORE THAN TWENTY-FIVE PER CENT BY WEIGHT WHEN DRY AND RODDED, PASSING A 50 MESH PER LINEAL INCH SIEVE AND NOT MORE THAN FIVE PER CENT PASSING A 100 MESH PER LINEAL INCH SIEVE. THREE PER CENT BY WEIGHT OF CLAY OR LOAM, OR A COMBINATION OF THE TWO, WILL BE PERMITTED PROVIDED THEY ARE WELL PULVERIZED AND DISTRIBUTED THROUGHOUT THE MIX. THE FINENESS MODULUS SHALL NOT BE LESS THAN 2.5 AND NOT MORE THAN 3.0.

C. MANHOLE GRAVEL: THE GRAVEL SHALL CONSIST OF CLEAN, HARD, TOUGH STONES FREE FROM VEGETABLE MATTER, ORGANIC MATTER, OR SURFACE COATING, RANGING IN SIZE FROM ONE & ONE HALF INCH DOWN, NOT MORE THAN FIVE PER CENT BY WEIGHT WHEN DRY AND RODDED, PASSING A SCREEN HAVING FOUR MESHES PER LINEAL INCH AND NO INTERMEDIATE SIZES SHALL BE REMOVED.

D. CONDUIT GRAVEL: THE GRAVEL SHALL CONSIST OF CLEAN, TOUGH STONES, FREE FROM VEGETABLE MATTER, ORGANIC MATTER, OR SURFACE COATING, RANGING IN SIZE FROM ONE-HALF INCH DOWN, NOT MORE THAN FIVE PER CENT BY WEIGHT WHEN DRY AND RODDED, PASSING A SCREEN HAVING FOUR MESHES PER LINEAL INCH AND NO INTERMEDIATE SIZES SHALL BE REMOVED.

E. WATER: THE WATER USED FOR MIXING OR SPRINKLING CONCRETE SHALL BE CLEAN AND FREE FROM EARTH, SILT, ALKALI, SALT, OR OTHER DETRIMENTAL IMPURITIES. WHEN POSSIBLE CITY WATER WILL BE USED.

F. STEEL: METAL REINFORCEMENT BEFORE BEING PLACED SHALL BE FREE FROM LOOSE RUST SCALE, GREASE, CLAY OR OTHER COATINGS THAT WILL DESTROY OR REDUCE THE BOND. THE STEEL SHALL CONFORM TO THE LATEST EDITION OF "SPECIFICATION FOR DEFORMED BILLET-STEEL BARS FOR CONCRETE REINFORCEMENT" (ASTM A-615.)

III. FIELD TEST FOR MATERIALS

FIELD TESTS SHALL BE MADE AS OFTEN AS IS NECESSARY TO INSURE THE MATERIALS CONFORMING TO THE FOREGOING SPECIFICATIONS. THE METHOD OF MAKING THESE TESTS SHALL BE IN ACCORDANCE WITH THE RECOMMENDATIONS OF THE AMERICAN SOCIETY FOR TESTING MATERIALS FOR CONCRETE AND CONCRETE AGGREGATES.

IV. CLASSES OF CONCRETE AND MIX DESIGN

A. TABLE I

CLASS OF CONCRETE:	A 2000 psi	B 3000 psi	C 3000 psi
WATER CONTENT (INCLUDING FREE SURFACE MOISTURE) RATIO OF WATER TO CEMENT BY WEIGHT	.60	.58	.58
GALLONS PER SACK	7.6	6.5	6.5
MINIMUM CEMENT CONTENT POUNDS PER CUBIC YARD	375	520	520
SACKS PER CUBIC YARD	4	5.5	5.5
TYPE CEMENT	I	I	III (HIGH EARLY)
ALLOWABLE SLUMP	5"-6"	4"-5"	5"-6"
MINIMUM FINE AGGREGATE CONTENT	40%	39%	37%
MAXIMUM AGGREGATE SIZE	1/2"	1 1/2"	1 1/2"

NOTES:
1. FOR DUCT LINE INSTALLATION USE CLASS A (2000psi) CONCRETE, OR AS SPECIFIED ON PLANS.
2. FOR MANHOLE AND VAULT INSTALLATIONS USE CLASS B (3000psi) CONCRETE.
3. FOR STREET BASE REPAIR USE CLASS C (3000psi) CONCRETE.

B. READY-MIX CONCRETE SHALL BE MIXED AND DELIVERED IN ACCORDANCE WITH THE REQUIREMENTS SET FORTH IN THE LATEST EDITION OF "SPECIFICATIONS FOR READY-MIX CONCRETE" ASTM C-94.

C. CONCRETE MADE BY VOLUMETRIC BATCHING AND CONTINUOUS MIXING SHALL CONFORM TO THE REQUIREMENTS SET FORTH IN THE LATEST EDITION OF "SPECIFICATIONS FOR CONCRETE MADE BY VOLUMETRIC BATCHING AND CONTINUOUS MIXING" ASTM C-685.

D. ALL CONCRETE SHALL BE PLACED WITHIN ONE HOUR AFTER MIXING.

V. DESIGN AND MIXING OF MORTAR AND CONCRETE HAND MIXES

A. MORTAR DESIGN
MORTAR SHALL BE COMPOSED OF ONE PART TYPE I PORTLAND CEMENT TO 2 3/4 PARTS GRADED STANDARD SAND BY VOLUME. THE SAND SHOULD NOT BE EXCESSIVELY WET OR ENTIRELY DRY WHEN MEASURED.

B. CONCRETE HAND MIX DESIGN FOR SMALL JOBS
THE FOLLOWING NUMBERS REFER TO THE VOLUMES, RESPECTIVELY, OF CEMENT, SAND, AND AGGREGATE TO BE USED FOR EACH MIX.
1. (1:2:2 1/4) FOR USE WITH MAXIMUM AGGREGATE SIZE OF 1/2.
2. (1:2 1/4:3) FOR USE WITH MAXIMUM AGGREGATE SIZE OF 1 1/2.

C. MIXING OF CONCRETE
THE CEMENT AND NATURAL MIXED AGGREGATE SHALL BE MEASURED IN SUITABLE CONTAINERS. THE MIXTURES SHALL BE PROPORTIONED BY VOLUME, EACH ITEM BEING MEASURED, LOOSE AND SEPARATELY. IF MACHINE MIXED IN A ROTARY TYPE BATCH MIXER, THE SPEED OF THE OUTSIDE EDGE OF THE DRUM SHALL BE ABOUT 100 FEET PER MINUTE. DRY MIX THE CEMENT AND AGGREGATES UNTIL OF UNIFORM MIXTURE. WATER SHALL THEN BE ADDED UNTIL A WORKABLE MIXTURE IS PRODUCED. EACH BATCH OF CONCRETE SHOULD BE USED IMMEDIATELY AFTER MIXING.

D. MIXING OF MORTAR
THE CEMENT AND SAND SHALL BE MIXED DRY UNTIL OF UNIFORM COLOR. WATER SHOULD THEN BE ADDED AND THE MIXTURE TURNED UNTIL IT FORMS A UNIFORM AND WORKABLE PASTE. EACH BATCH OF MORTAR SHOULD BE USED IMMEDIATELY AFTER MIXING.

VI. PLACING OF CONCRETE

A. DUCT LINES: THE CONCRETE FOR CONDUIT LINES SHALL BE PLACED MONOLITHICALLY IMMEDIATELY AFTER MIXING. THE CONCRETE WILL BE SO TAMPED OR PUDDLED SO AS TO HAVE A DENSE CONCRETE ENVELOPE AROUND THE DUCTS. IF NECESSARY TO JOIN A NEW CONDUIT LINE ONTO ONE IN WHICH THE CONCRETE HAS SET, THE OLD SURFACE SHALL BE CLEANED, ROUGHENED AND WETTED.

B. MANHOLES AND TRANSFORMER VAULTS: THE CONCRETE FOR MANHOLES AND VAULTS SHALL BE PLACED IMMEDIATELY AFTER MIXING. THE CONCRETE SHALL BE PLACED SO AS TO KEEP THE SURFACE OF THE CONCRETE LEVEL TO PREVENT ANY FLOWING OF THE CONCRETE IN THE FORMS. THE CONCRETE SHALL BE CONTINUOUSLY SPADED TO EXPEL AIR POCKETS. THE TOP OF THE WALLS SHALL BE WELL CLIPPED, ROUGHENED AND WETTED IMMEDIATELY BEFORE POURING THE ROOF SLAB.

C. STREET PAVEMENT: SEE DETAIL #20

VII. PROTECTION OF FRESH CONCRETE

CONCRETE SHALL BE KEPT MOIST BY SPRINKLING WITH WATER FOR A PERIOD SUITABLE TO THE CHARACTER OF THE STRUCTURE. WALKING OR WORKING OVER FINISHED SURFACES SHALL NOT BE PERMITTED UNTIL SAME HAVE SUFFICIENTLY SET. FINISHED STREET SURFACES SHALL BE WELL BARRICADED FOR AT LEAST FORTY-EIGHT HOURS AFTER PLACEMENT. FORMS AND BRACINGS FOR WALLS OF MANHOLES AND TRANSFORMER VAULTS SHALL NOT BE DISTURBED DURING THE FIRST THIRTY-SIX HOURS AFTER CONCRETE HAS BEEN PLACED. FORMS AND BRACINGS FOR ROOFS OF MANHOLES AND TRANSFORMER VAULTS SHALL NOT BE REMOVED FOR AT LEAST SEVEN DAYS AFTER CONCRETE HAS BEEN PLACED.

VIII. FINISH

UNLESS ESPECIALLY CALLED FOR, NO WORK IS TO BE DONE BY WAY OF FINISHING CONCRETE TO SURFACES AFTER THE FORMS ARE REMOVED, EXCEPT THAT SERIOUS FAULTS IN THE CONCRETE SURFACE SHALL BE CHISELED OUT AND POCKET FORMED AND FILLED WITH CEMENT MORTAR IN SUCH A MANNER THAT THE PATCH IS SECURELY KEYED INTO THE CONCRETE SURFACE.

RECORD DRAWING

E12

CD

TU ELECTRIC

REVISION DESCRIPTION	DATE	DWN.	CH.	ENG.	APP.	APP.	APP.

UNIT ID

DWG TYPE

LIST OF DRAWINGS

SCALE (H=NO SCALE) (V=NO SCALE)

NETWORK UNDERGROUND APPURTENANCE SHEETS MISCELLANEOUS DETAILS

DATE	DRAWN	CH.	APP.
05-12-92	W.A.	JRC	JES

ESTIMATE

NO.	DATE	W.A.	APP. PRN

E-NUA-1
SHEET NO. 8

DETAIL #21

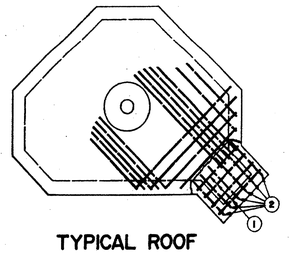

TYPICAL ROOF

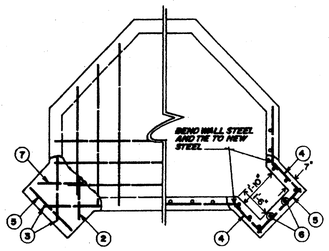

TYPICAL FLOOR / WALL

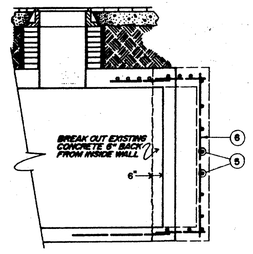

FLOOR / ROOF / WALL VIEW

ALL REINFORCING BARS #5						
ITEM	LENGTH		QUANTITY			
	FT.	IN.	FLOOR	WALLS	ROOF	TOTAL
1	2	9			4	4
2	2	3	1		6	7
3	3	0	2			2
4	2	0	2	18	2	22
5	2	11	1	6	1	8
6	7	3		8		8
7	2	5	1			1

DEEP PANELS ON NEW OR EXISTING TYPE
"C" AND "B" - *See Job Sketch*

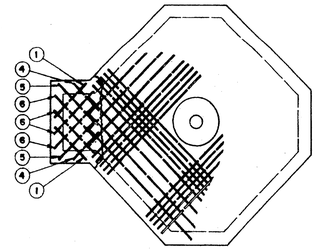

TYPICAL ROOF

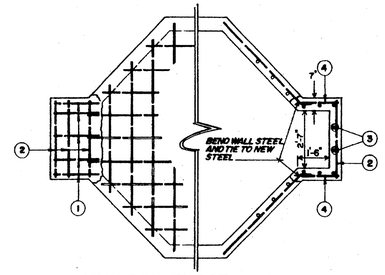

TYPICAL FLOOR / WALL

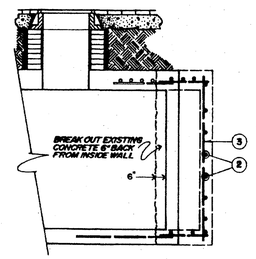

FLOOR / ROOF / WALL VIEW

ALL REINFORCING BARS #5						
ITEM	LENGTH		QUANTITY			
	FT.	IN.	FLOOR	WALLS	ROOF	TOTAL
1	2	3	5		2	7
2	3	6	3	7		10
3	7	3		8		8
4	1	9		14	2	16
5	2	6			2	2
6	2	9			4	4

DEEP PANELS ON NEW OR EXISTING TYPE
"B", "C" AND "D" - *See Job Sketch*

RECORD DRAWING

E13

CD

TU ELECTRIC

DRAWN	CH.	APP.	APP.

REVISION DESCRIPTION	DATE

DWG TYPE | UNIT ID | ESTIMATE | W.A. | NO. | W.A. | APP. PRN | APP. JES | ENG. JRC | CH. JRC | DWN. MED | DATE 05-12-92

LIST OF DRAWINGS

SCALE (H=NO SCALE) (V=NO SCALE)

NETWORK UNDERGROUND
APPURTENANCE SHEETS
MISCELLANEOUS DETAILS

E-NUA-1
SHEET NO. 9

ADDISON ROAD

NOT IN CONTRACT

TOWN OF ADDISON CONFERENCE & THEATRE CENTRE

METAL CARPORT

TOWN OF ADDISON FUTURE PARKING

AVIS

BARCO MIRROR & GLASS

MEIER VALUE CENTER

BENT TREE AUTO

REGENCY

AUTO HAUS

TRANSFORMER 1

PANEL "R" 2

RESIDENT PARKING GARAGE 5 LEVELS

COURTYARD

ADDISON CIRCLE PHASE III BUILDING "3B"

ADDISON CIRCLE PHASE III BUILDING "3B"

PRIVATE FIRE LANE

FUTURE DEVELOPMENT

(4 FUTURE POLES) (ON CKT. 6, 8)

(3 FUTURE POLES) (ON CKT. 2, 4)

(5 FUTURE POLES) (ON CKT 10,12)

2-2" C. 1-SPARE

(3 FUTURE POLES) (ON CKT 14,16)

ARTIST WAY

WATER TOWER

ARTIST WAY, 7

R-9, 11

TYPICAL

MORRIS AVENUE

GOODMAN AVE.

COURTYARD

ADDISON CIRCLE PHASE III BUILDING "3A"

FUTURE PARK

FUTURE DEVELOPMENT

FUTURE RESIDENTIAL STREET (R-1)

U.S. POST OFFICE

ADDISON CIRCLE PHASE I EXISTING BUILDING "B"

PASCHAL PLACE

WITT PLACE

ADDISON CIRCLE PHASE I EXISTING BUILDING "C"

FUTURE MEWS

EXISTING BOSQUE PARK

18+00 19+00 20+00 21+00 23+00 24+00 25+00

7+00 8+00 9+00 10+00 11+00

N

0 25 50 75 100
SCALE IN FEET

LIGHT FIXTURE AND CIRCUIT DESIGNATIONS:

- NEW CONDUIT
- EXISTING CONDUIT
- EXISTING CONDUIT WITH NEW WIRE
- ●A NEW POLE & FIXTURE
- ○EX EXISTING POLE & FIXTURE
- ○CEX EXISTING CABLE LIGHT
- REFER TO SHEET E15 FOR GENERAL NOTES AND KEY NOTES
- ✱B NEW POLE & FIXTURE

POLE FIXTURE

THE SEAL APPEARING ON THIS DOCUMENT WAS AUTHORIZED BY GERALD W. INZER, P.E. 56258 ON

STATE OF TEXAS
GERALD W. INZER
56258
REGISTERED
PROFESSIONAL ENGINEER

6/23/99

DATE	DESCRIPTION	REF NO.
6/23/99	ISSUED FOR CONSTRUCTION	N/A
5/17/99	ISSUED FOR BID	N/A

STREET LIGHT CONDUIT & POWER PLAN

ADDISON CIRCLE

PHASE II-B PUBLIC INFRASTRUCTURE

TOWN OF ADDISON, TEXAS

Huitt - Zollars, Inc.
3131 McKinney Ave., Suite 600, Dallas, TX 75204
Phone (214) 871-3311 Fax (214) 871-0757

DESIGN	DRAWN	APPR.	SCALE	DATE	PROJECT NO.	NO.
HZI	HZI	DEM	1"=50'	MAR. 99	01-1822-50	E14

RECORD DRAWING

$$DGN$$SPECIFICATIONS$$

$$DGN$$SPECIFICATIONS$$
$$STYLES$$
$$PSPEC$$
$$PROCESSNAME$$

$$PSPEC ROTOS$$
$$PSPEC$$

*no ref logical=no ref name=no ref levels=
LLAKEWAY,LOGAL3
P:\ACTIVE\ADDISON CIRCLE PHASE II-B\CAD\E14-STREET LIGHT CONDUIT & POWER PLAN.DGN

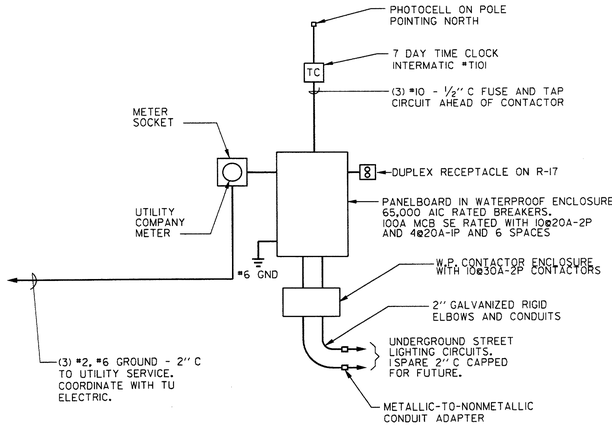

(1) TYPICAL PANEL RISER DIAGRAM AT SERVICE POINT R

N.T.S.

NOTE:

1. PROVIDE ALL INSTALLATION HARDWARE INCLUDING UNISTRUT FRAMEWORK FOR SECURE INSTALLATION.
2. TERMINAL BLOCK CAN TO HAVE BLOCKS AND SPACE FOR MIN. OF 12 MORE CIRCUITS FOR FUTURE EXPANSION.
3. EXACT LOCATION OF PANEL TO BE DETERMINED AT PROJECT SITE.
4. SERIES RATING FOR CIRCUIT BREAKERS SHALL BE 65K AIC.
5. ENTIRE INSTALLATION TO BE RATED FOR OUTDOOR INSTALLATION. PANEL AND SWITCH SHALL HAVE PROVISIONS FOR LOCKING.
6. EXACT LOCATIONS OF EQUIPMENT SHALL BE DETERMINED AT THE PROJECT SITE.
7. PROGRAM LIGHTS "ON" BY PHOTO CELL AND "OFF" BY TIME CLOCK.

LIGHT FIXTURE SCHEDULE					
TYPE	DESCRIPTION	LAMP	MANUFACTURER	CATALOGUE NO.	FINISH
A	CUSTOM STYLE	175 MH	BEGA	9801MH	BLACK
A-POLE	15'-8" ROUND		BEGA	1508HR	BLACK
B	CUSTOM STYLE	175 MH	BEGA	9801MH (2 PER POLE)	BLACK
B-POLE	15'-8" ROUND		BEGA	1508HR	BLACK

NOTES:

1. PROVIDE REINFORCED CONCRETE BASE, ANCHOR BOLTS AND REQUIRED ACCESSORIES.
2. BID SHALL BE BASED UPON THE ABOVE LISTED FIXTURES TO MATCH PHASE I FIXTURES.
3. PROVIDE MATCHING BASE COVER FOR EACH FIXTURE.
4. ALL FIXTURES ARE 240 VOLT AND REQUIRE DOUBLE FUSING.
5. A CUSTOM HINGED POLE IS REQUIRED FOR FIXTURE TYPE A & B (45^ HINGED).
6. REFER TO SPECIFICATIONS FOR ADDITIONAL INFORMATION.
7. FIXTURES TYPE B TO BE INSTALLED 90^ APART.

GENERAL NOTES

NUMBER	DESCRIPTION
1	THE TERM 'PROVIDE' SHALL MEAN FOR THE CONTRACTOR TO FURNISH AND INSTALL A COMPLETE OPERATING SYSTEM.
2	REFER TO PHASE I PUBLIC INFRASTRUCTURE DRAWINGS FOR ADDITIONAL INFORMATION ON TREE LIGHTING CONDUIT LOCATIONS.

KEY NOTES (SEE E14)

NUMBER	DESCRIPTION
(1)	TU ELECTRIC TRANSFORMER WITH SINGLE PHASE TRANSFORMER FOR STREET LIGHTING. VERIFY POINT OF CONNECTION WITH TU ELECTRIC.
(2)	PROVIDE 120/240 VOLT, 1 PHASE, 3 WIRE, W/GND PANELBOARD WITH MAIN CONTACTOR. CONNECT TO ELECTRIC UTILITY AT DESIGNATED SERVICE POINTS. SEE DETAIL 1 ON SHEET E15.
(3)	STREET LIGHT FIXTURE TYPE A. INSTALL CONCRETE BASE, POLE, FIXTURE AND CONNECTIONS. REFER TO SHEET ST5 FOR POLE BASE DETAIL.
(4)	CIRCUIT TO STREET LIGHTS OF 3 #8 - 2" C UNLESS NOTED OTHER WISE ON CIRCUIT SCHEDULE.
(5)	ROUTE CIRCUITRY THROUGH CONDUITS AND PULL BOXES. MAKE SPLICE IN MAIN FEEDERS USING HIGH COMPRESSION SPLICE FITTING.
(6)	PHOTO ELECTRIC CELL ON TOP OF POLE FACING NORTH.
(7)	LOCATE EXISTING CAPPED CONDUIT AND EXTEND TO NEW FIXTURE(S). INSTALL WIRE BACK TO EXISTING FIXTURE AND CONNECT CIRCUIT.
(8)	CAP CONDUIT FOR FUTURE EXTENSION.

ELECTRICAL LEGEND

SYMBOL	DESCRIPTION
———	2" CONDUIT FOR STREET LIGHTING CIRCUITS FROM PANELBOARD TO EACH PULL BOX AND TO EACH STREET LIGHT FIXTURE.
HH	PULL BOX. (12" W x 12" D x 18" L)
(R1)	CONDUIT IDENTIFICATION FOR NEW MAIN FEEDERS.
R-2,4	CIRCUIT NUMBERS FROM PANELS AT SERVICE POINTS INDICATED IN DRAWING E14.
←	HOME RUN TO PANEL. PROVIDE CONDUIT AND WIRE FROM PULL BOX TO PANELBOARD.
●	STREET LIGHT FIXTURE TYPE 'A'.
✱	STREET LIGHT FIXTURE TYPE 'B'.

CIRCUIT SCHEDULE

CONDUIT DESIGNATION	CIRCUIT NUMBERS	PANELBOARD	CIRCUIT BREAKER	CONDUCTORS
(R1) TWO-2" CONDUITS (ONE SPARE)	R-1, 3	PANEL "R" 100 AMP M.C.B. 120/240 VOLT 1 PHASE, 3 WIRE W/ GROUND 10-20A-2P C.B. 2-20A-1P C.B.	20 AMP, 2 POLE	(2) #8
	R-5, 7		20 AMP, 2 POLE	(2) #8
	R-9, 11		20 AMP, 2 POLE	(2) #8
	R-13, 15		20 AMP, 2 POLE	(2) #8
	R-2, 4		20 AMP, 2 POLE	(2) #8
	R-6, 8		20 AMP, 2 POLE	(2) #8
	R-10, 12		20 AMP, 2 POLE	(2) #8
	R-14, 16		20 AMP, 2 POLE	(2) #8
			20 AMP, 1 POLE	(1) #8 GROUND (2) #10 P.E.C.

NOTES TO CIRCUIT SCHEDULE:

1. MAINTAIN ABOVE CONDUCTORS THROUGHOUT ALL PULL BOXES.
2. CONDUIT DESIGNATIONS ABOVE ARE ALL 2" CONDUITS.

GENERAL ELECTRICAL NOTES FOR THIS PROJECT WHICH APPLY TO DRAWING E14:

1. LOCATIONS OF ALL LIGHT FIXTURES, PULL BOXES AND ROUTING OF CONDUITS SHALL BE IDENTIFIED ON THE SITE BY STAKES AND PAINT PRIOR TO ANY EXCAVATION. REQUIREMENTS FOR CONDUIT ROUTING ARE PROVIDED ON DRAWINGS AND SPECIFICATIONS. OWNER WILL REVIEW AT THE SITE AND PROVIDE DIRECTIONS ON FIELD ADJUSTMENTS OF UP TO 10 FOOT FROM LOCATIONS SHOWN ON THE DRAWINGS.
2. CONTRACTOR SHALL COORDINATE STORM WATER, WASTEWATER, WATER, IRRIGATION AND ELECTRICAL CONDUIT TRENCHING AND INSTALLATION TO MINIMIZE THE DISTURBANCE OF EXISTING TREE ROOTS.
3. ALL PULL BOXES ARE 12" X 18" X 12" DEEP CONCRETE BOX WITH BOLT ON CONCRETE COVER SIMILAR TO T.U. SUBSURFACE SECONDARY BOX. INSTALL CONDUITS NEAR CORNER OF BOX TO ALLOW CONDUCTORS TO LOOP THROUGH BOX.

RECORD DRAWING

THE SEAL APPEARING ON THIS DOCUMENT WAS AUTHORIZED BY GERALD W. INZER, P.E. 56258 ON

STATE OF TEXAS — GERALD W. INZER — 56258 — REGISTERED PROFESSIONAL ENGINEER

6/23/99

DATE	DESCRIPTION	REF NO.
6/23/99	ISSUED FOR CONSTRUCTION	N/A
5/17/99	ISSUED FOR BID	N/A

STREET LIGHT NOTES & DETAILS

ADDISON CIRCLE

PHASE II-B PUBLIC INFRASTRUCTURE

TOWN OF ADDISON, TEXAS

Huitt - Zollars, Inc.
3131 McKinney Ave., Suite 600, Dallas, TX 75204
Phone (214) 871-3311/Fax (214) 871-0757

DESIGN	DRAWN	APPR.	SCALE	DATE	PROJECT NO.	NO.
HZI	HZI	DEM	N.T.S.	MAR. 99	01-1822-50	E15

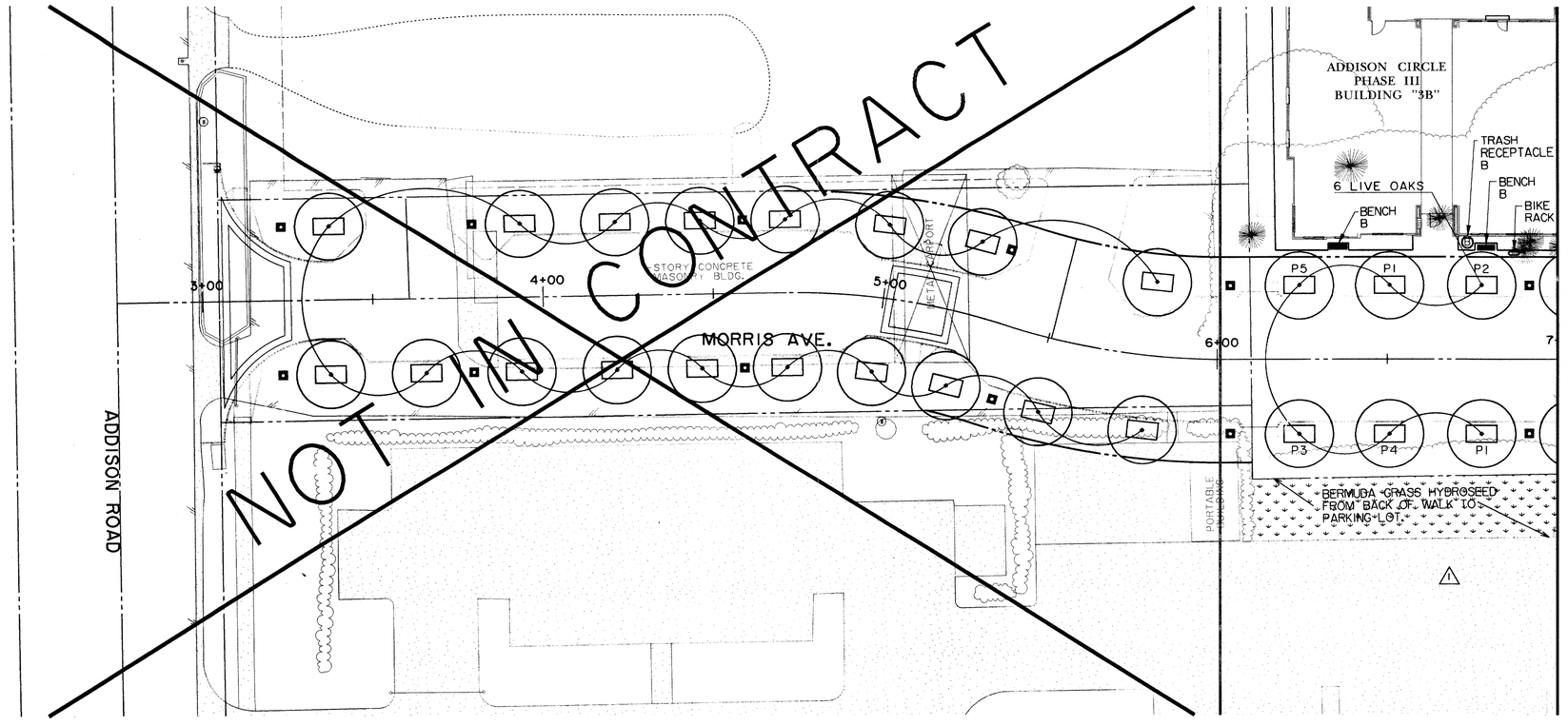

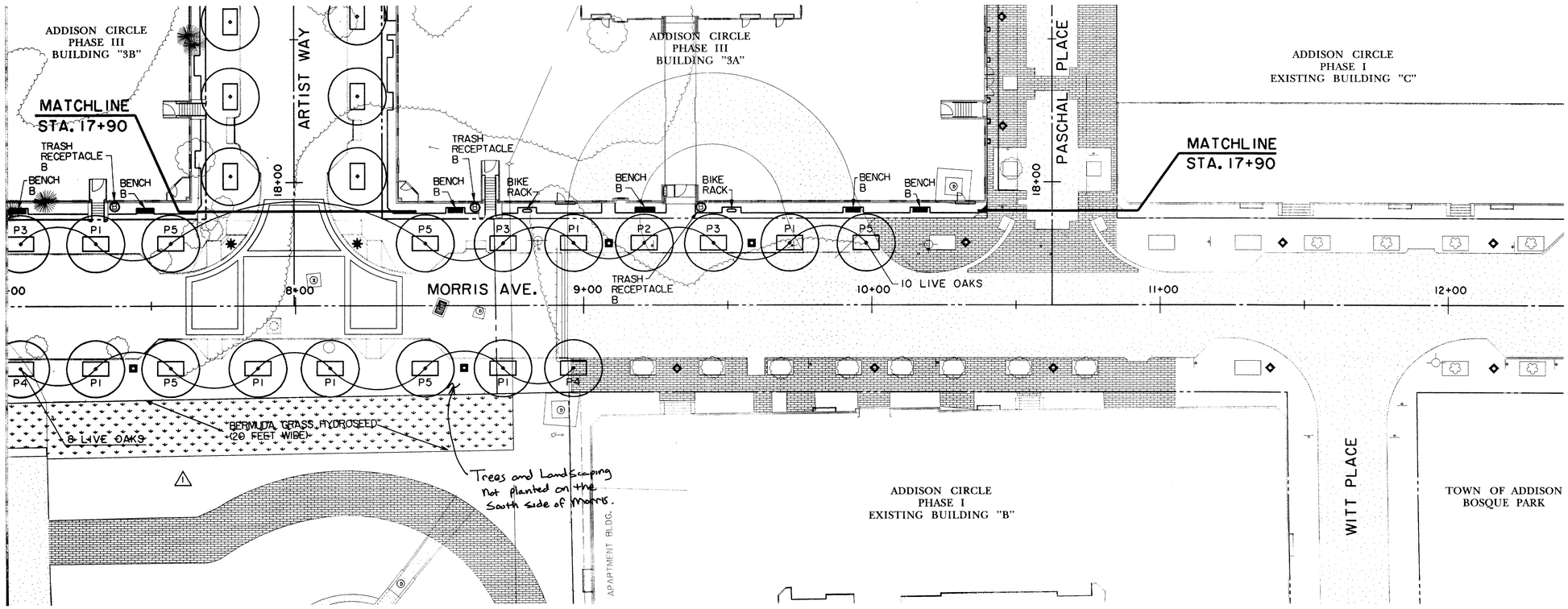

N

0 10 20 30 40
SCALE IN FEET

RECORD DRAWING

THE SEAL APPEARING ON THIS DOCUMENT WAS AUTHORIZED BY KAREN W. KOERTH, L.A. 1594

STATE OF TEXAS · KAREN W. KOERTH · 1594 · REGISTERED LANDSCAPE ARCHITECT

DATE	DESCRIPTION	REF NO.
6/23/99	ISSUED FOR CONSTRUCTION	N/A
6/2/99	ADDENDUM #1	1
5/17/99	ISSUED FOR BID	N/A

PLANTING & FURNITURE PLAN
MORRIS AVENUE

ADDISON CIRCLE
PHASE II-B PUBLIC INFRASTRUCTURE

TOWN OF ADDISON, TEXAS

Huitt - Zollars, Inc.
3131 Mckinney Ave., Suite 600, Dallas, TX 75204
Phone (214) 871-3311/Fax (214) 871-0757

DESIGN	DRAWN	APPR.	SCALE	DATE	PROJECT NO.	NO.
HZI	HZI	DEM	H: 1"=20' V: 1"=6'	MAR. 99	01-1822-50	PFI

h:\proj\01182250\dgn\AUC3LS11.DGN

R: AUC3D3.DGN, 3-3A,13,16,8,23-29,32-34,37-39,43-53,55-61
F1: AUC3TOPO.DGN, 1-12,14-29,31-34,36-42
T1: AUC3TOPO.DGN, 1-12,14-29,31-34,36-42
U2: AUC3UTIL.DGN
T4: AUC3UTIL.DGN, 1-10,14-29,31-34,36-40,43-57,59-62
PS: HORIZ=1"=20', 1-3,5,6,10-11,13,25,43-49
P3: AUC3TOPO.DGN, 1-12,14-29,31-34,36-42
U2: AUC3UTIL.DGN
T4: AUC3UTIL.DGN, 1-10,14-29,31-34,36-40,43-57,59-62
PRF ROTATION=90.3250000
F1:\ISR\MILLER.TBL
P1: \\DALLAS2\DISK01\PROJECTS\01182250\dgn\AUC3LS11.DGN
F1: \\DALLAS2\DISK01\PROJECTS\01182250\dgn\AUC3TOPO.DGN
T1: \\DALLAS2\DISK01\PROJECTS\01182250\dgn\AUC3TOPO.DGN
U2: \\DALLAS2\DISK01\PROJECTS\01182250\dgn\AUC3UTIL.DGN
T4: \\DALLAS2\DISK01\PROJECTS\01182250\dgn\AUC3UTIL.DGN
Huitt-Zollars, Inc.

MORRIS AVE.

MATCHLINE STA. 17+90

ADDISON CIRCLE PHASE III BUILDING "3B"

TRASH RECEPTACLE B

BIKE RACK

BENCH B

MATCHLINE STA. 0+31

18+00 19+00 ARTIST WAY 20+00 21+00 22+00 23+00

00+01

00+18

12 BALD CYPRESS

GOODMAN AVE.

ADDISON CIRCLE PHASE III BUILDING "3A"

MATCHLINE STA. 8+30

BERMUDA GRASS HYDROSEED (20 FEET WIDE)

FUTURE PARK

14 BALD CYPRESS

FUTURE DEVELOPMENT

1+00

SOLID SOD BERMUDA OVER GRASSCRETE PAVERS

ADDISON CIRCLE PHASE III BUILDING "3B"

MATCHLINE STA. 0+31

21+00 8+00 9+00 GOODMAN AVE. 10+00 11+00

ARTIST WAY 20+00

7 LIVE OAKS

MATCHLINE STA. 20+22

PASCHAL PLACE

ADDISON CIRCLE PHASE I EXISTING BUILDING "C"

N

Z

0 10 20 30 40
SCALE IN FEET

RECORD DRAWING

THE SEAL APPEARING ON THIS DOCUMENT WAS AUTHORIZED BY KAREN W. KOERTH, L.A. 1594

STATE OF TEXAS · KAREN W. KOERTH · 1594 · REGISTERED LANDSCAPE ARCHITECT

DATE	DESCRIPTION	REF NO.
6/23/99	ISSUED FOR CONSTRUCTION	N/A
6/2/99	ADDENDUM #1	1
5/17/99	ISSUED FOR BID	N/A

PLANTING & FURNITURE PLAN
ARTIST WAY & GOODMAN AVE.

ADDISON CIRCLE
PHASE II-B PUBLIC INFRASTRUCTURE

TOWN OF ADDISON, TEXAS

Huitt - Zollars, Inc.
3131 Mckinney Ave., Suite 600, Dallas, TX 75204
Phone (214) 871-3311/Fax (214) 871-0757

DESIGN	DRAWN	APPR.	SCALE	DATE	PROJECT NO.	NO.
HZI	HZI	DEM	H: 1"=20' V: 1"=6'	MAR. 99	01-1822-50	PF2

h:\proj\01182250\dgn\AUC3LS12.DGN

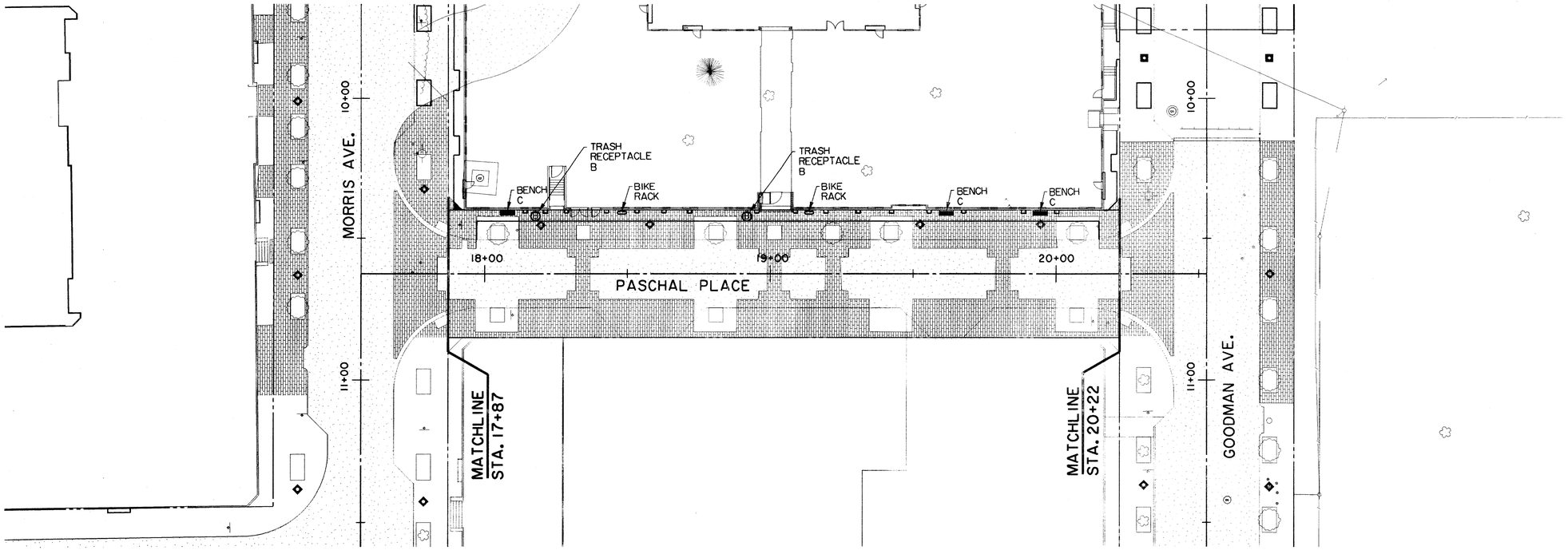

N

0 10 20 30 40
SCALE IN FEET

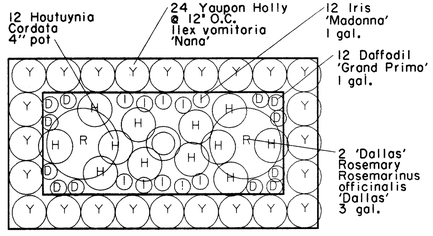

P1 5'X9' TREE WELL PLANTING
SCALE: 1/4"=1'-0"

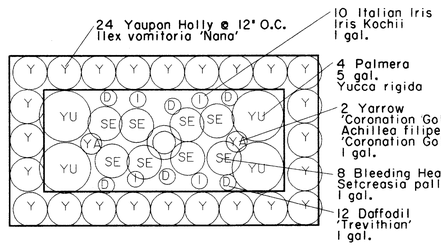

P3 5'X9' TREE WELL PLANTING
SCALE: 1/4"=1'-0"

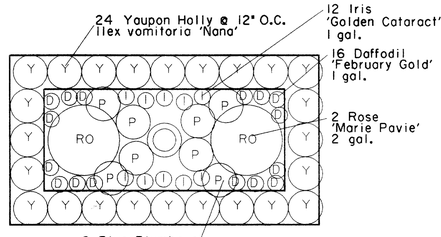

P5 5'X9' TREE WELL PLANTING
SCALE: 1/4"=1'-0"

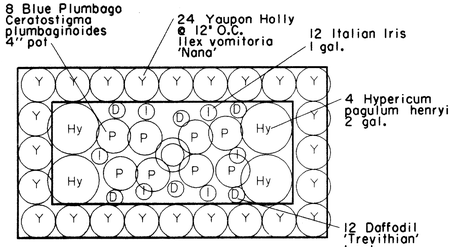

P2 5'X9' TREE WELL PLANTING
SCALE: 1/4"=1'-0"

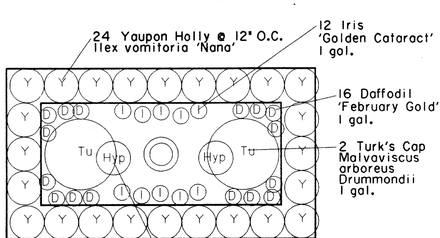

P4 5'X9' TREE WELL PLANTING
SCALE: 1/4"=1'-0"

ADDISON CIRCLE PHASE III
FURNITURE SCHEDULE

QUANTITY	ITEM	DESCRIPTION	SOURCE
21	Bench B	5' Bowery Bench CDBB-805-60-F Color: Standard Black	Canterbury International 1-800-935-7111
3	Bench C	6' Expo Bench (3 Supports) Black Gloss Finish	Robinson Iron Pat Calhoun
⚠1 15	Trash Receptacle B	Ultrium Custom metal pole mount trash receptacle, 20: ht., 9" dia., Black powder coat finish	Pat Calhoun Gametime: Representative: Resource Consulting Services 972-492-2428
13	Bike Rack	Bike Rib, Model BR2-3 (imbedded) Black Powder Coat Finish	Function First Bike Security 602-322-9626

ADDISON CIRCLE PHASE II-B
PLANT LIST

QUANTITY	COMMON NAME	BOTANICAL NAME	SIZE/REMARKS
Shade Trees			
38	Live Oak	Quercus virginiana	200 GAL. 5"-6" C
26	Bald Cypress	Taxodium distichum	200 GAL. 5"-6" CA
Shrubs			
1224	Dwarf Yaupon Holly	Ilex vomitoria 'nana'	1 GAL., 8"-10" H
44	Hypericum	Hypericum pagulum 'henryi'	2 GAL. 14"-18" HT
36	Rose 'Marie Pavie'	Rosa sp.. Marie Pavie'	2-GAL. 12-14" HT
34	Dallas' Rosemary	Rosmarinus officinalis 'Dallas'	3 gal., 18"-24" H
Perennials/Ground Cover			
18	Yarrow 'Coronation Gold'	Achillea filipendulina'Coronation Gold'	1-GAL-FULL
232	Blue Plumbago	Ceratostigma plumbaginoides	4"POT-FULL
2248	sf. Common Bermuda	Cynodon dactylon	SOD
18	Hyperion Daylilly	Hemerocallis 'Hyperion'	1-GAL-FULL
204	Houttuynia	Houttuynia cordata 'variagata'	4" POT-FULL
204	Iris 'Madonna'	Iris albicans 'Modanna'	1-GAL-FULL
222	Italian Iris	Iris kochii	1-GAL-FULL
324	Iris 'Golden Cataract'	Iris kochii 'Golden Cataract'	1-GAL-FULL
18	Turk's Cap	Malvaviscus arboreus Drummondii	1-GAL-FULL
432	Daffodil 'February Gold'	Narcissus x 'February Gold'	1-GAL-FULL
204	Daffodil 'Grand Primo'	Narcissus x 'Grand Primo'	1-GAL-FULL
240	Daffodil Trevithian	Narcissus x 'Trevithian'	1-GAL-FULL
72	Bleeding Heart	Setcreasia pallida	1-GAL-FULL
36	Palmera	Yucca rigida	5-GAL.-12"-14" HT. 8"-10" SPREAD

RECORD DRAWING

THE SEAL APPEARING ON THIS DOCUMENT WAS AUTHORIZED BY KAREN W. KOERTH, L.A. 1594

STATE OF TEXAS
KAREN W. KOERTH
1594
REGISTERED
LANDSCAPE ARCHITECT

DATE	DESCRIPTION	REF NO.
6/23/99	ISSUED FOR CONSTRUCTION	N/A
6/2/99	ADDENDUM #1	⚠1
5/17/99	ISSUED FOR BID	N/A

PLANTING & FURNITURE PLAN - DETAILS
PASCHAL PLACE

ADDISON CIRCLE

PHASE II-B PUBLIC INFRASTRUCTURE

TOWN OF ADDISON, TEXAS

Huitt - Zollars, Inc.
3131 Mckinney Ave., Suite 600, Dallas, TX 75204
Phone (214) 871-3311/Fax (214) 871-0757

DESIGN	DRAWN	APPR.	SCALE	DATE	PROJECT NO.	NO.
HZI	HZI	DEM	1"=20'	MAR. 99	01-1822-50	PF3

h:\proj\01182250\dgn\AUC3LSI3.DGN

B: AUC3SLD06L, 2-3,5,8,10,21-23,28,32-34,37-39,41-52,55-61
P: AUC3SLD06L, 1-3,5-8,10-12,14-16,18-20,24-27,29-31,35-36,40,53-54
T: AUC3TRP02.DGN, 1-11,14-28,31-34,36-42
U: AUC3UTIL.DGN,
TU: AUC3DRAW.DGN,
PRF ROTATION=0.820000
F:\TB\MILLER.TBL
h:\proj\01182250\dgn\AUC3LSI3.DGN
h:\proj\01182250\dgn\AUC3LSI3.PRF
\\VADALLAS2\DISK0-P\JOT\NO\400MN-AUC3LSI3.PRF
Huitt-Zollars, Inc.

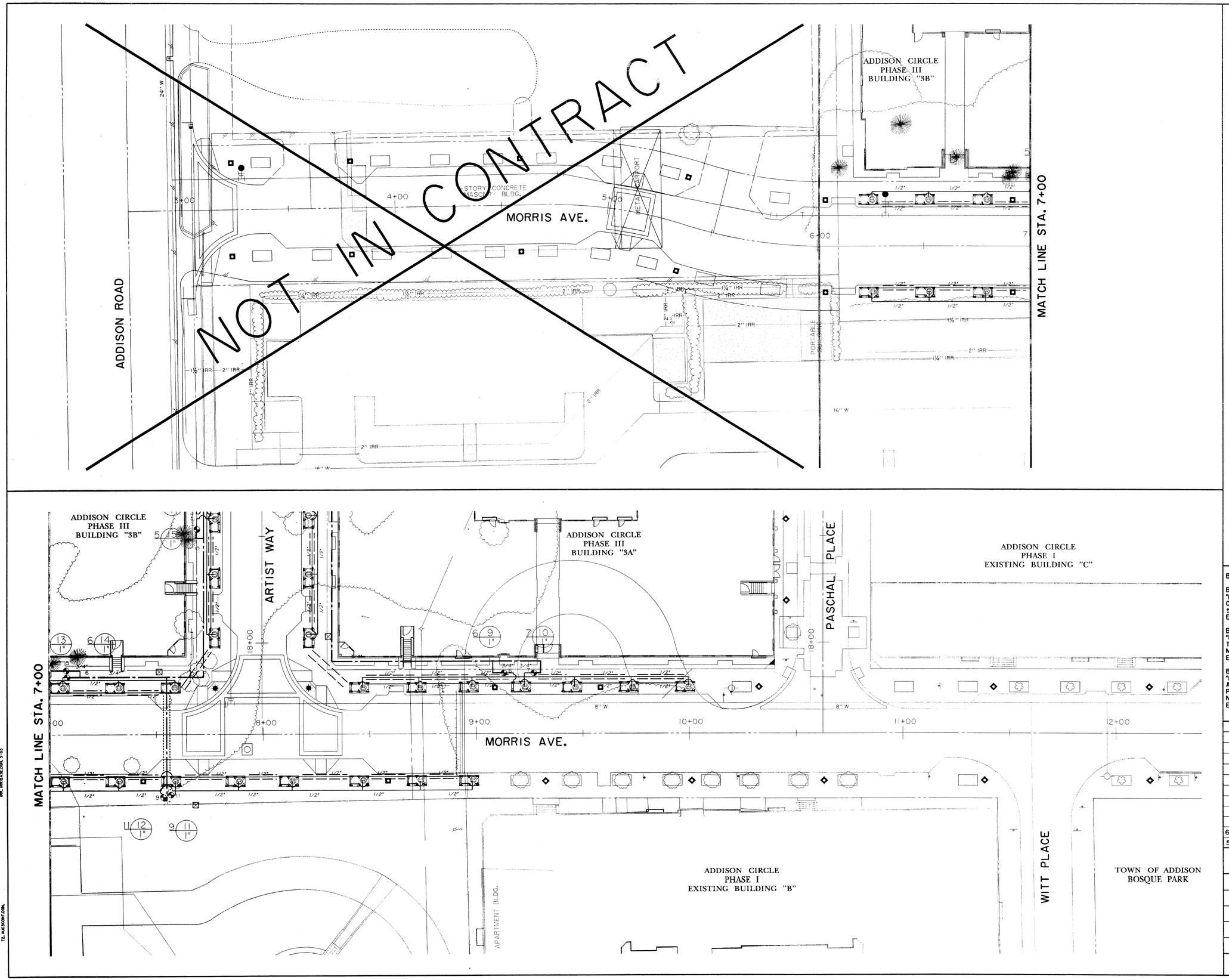

N

0 10 20 30 40
SCALE IN FEET

STEPHEN C BERKENBILE & ASSOCIATES
IRRIGATION DESIGN CONSULTANTS

411 HYDE PARK PLACE
DUNCANVILLE, TX 75137

(972) 296-2724
FAX (972) 780-0048

RECORD DRAWING

BENCHMARKS:

BM#5
"□" CUT ON 8' INLET ON NORTH CURB LINE OF GOODMAN AVE. ±75' EAST OF PASCHAL PLACE. ELEV. 629.98

BM#6
"□" CUT AT ℄ OF 8' INLET AT THE SOUTHWEST CORNER OF MORRIS AVE. AND WITT PLACE. ELEV. 627.29

BM#7
"□" CUT AT WEST CORNER OF ADDISON THEATRE CENTRE PARKING LOT, SECOND ENTRANCE NORTH OF ADDISON RD. ELEV. 637.66

DATE	DESCRIPTION	REF NO.
6/23/99	ISSUED FOR CONSTRUCTION	N/A
5/17/99	ISSUED FOR BID	N/A

IRRIGATION PLAN
MORRIS AVENUE

ADDISON CIRCLE
PHASE II-B PUBLIC INFRASTRUCTURE

TOWN OF ADDISON, TEXAS

Huitt - Zollars, Inc.
3131 Mckinney Ave., Suite 600, Dallas, TX 75204
Phone (214) 871-3311/Fax (214) 871-0757

DESIGN	DRAWN	APPR.	SCALE	DATE	PROJECT NO.	NO.
HZI	HZI	SCB	1"=20'	MAR. 99	01-1822-50	IR1

h:\proj\01182250\dgn\AUC3IR01.DGN

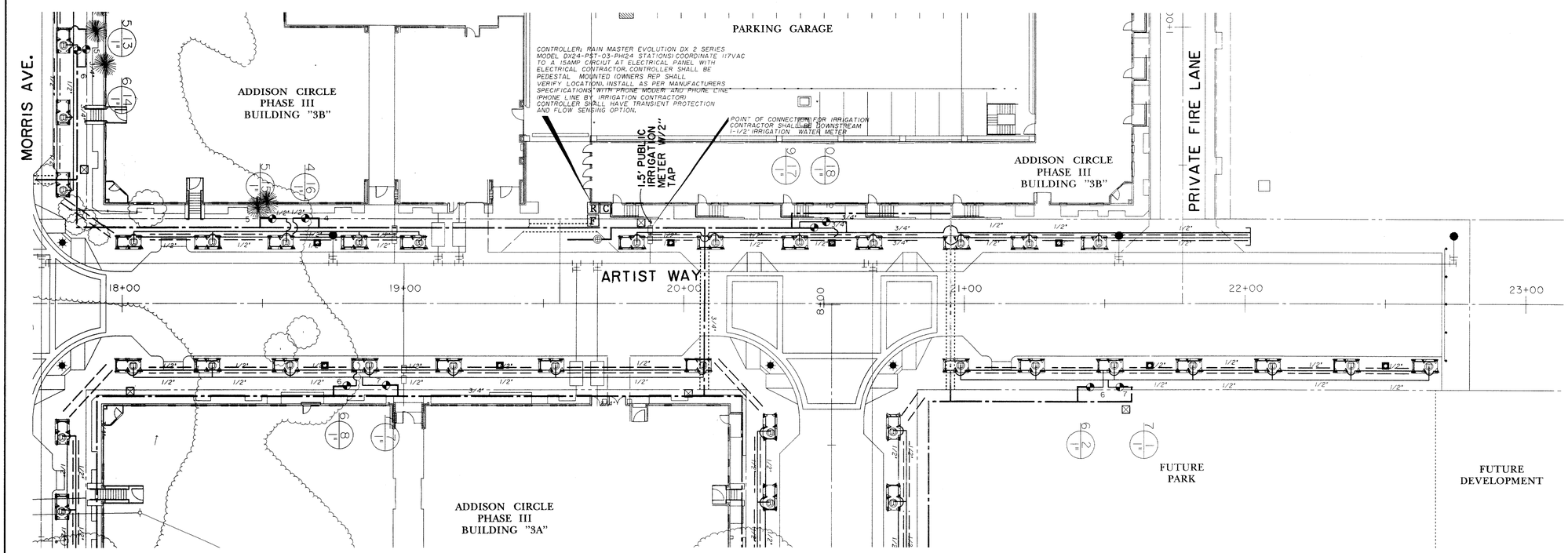

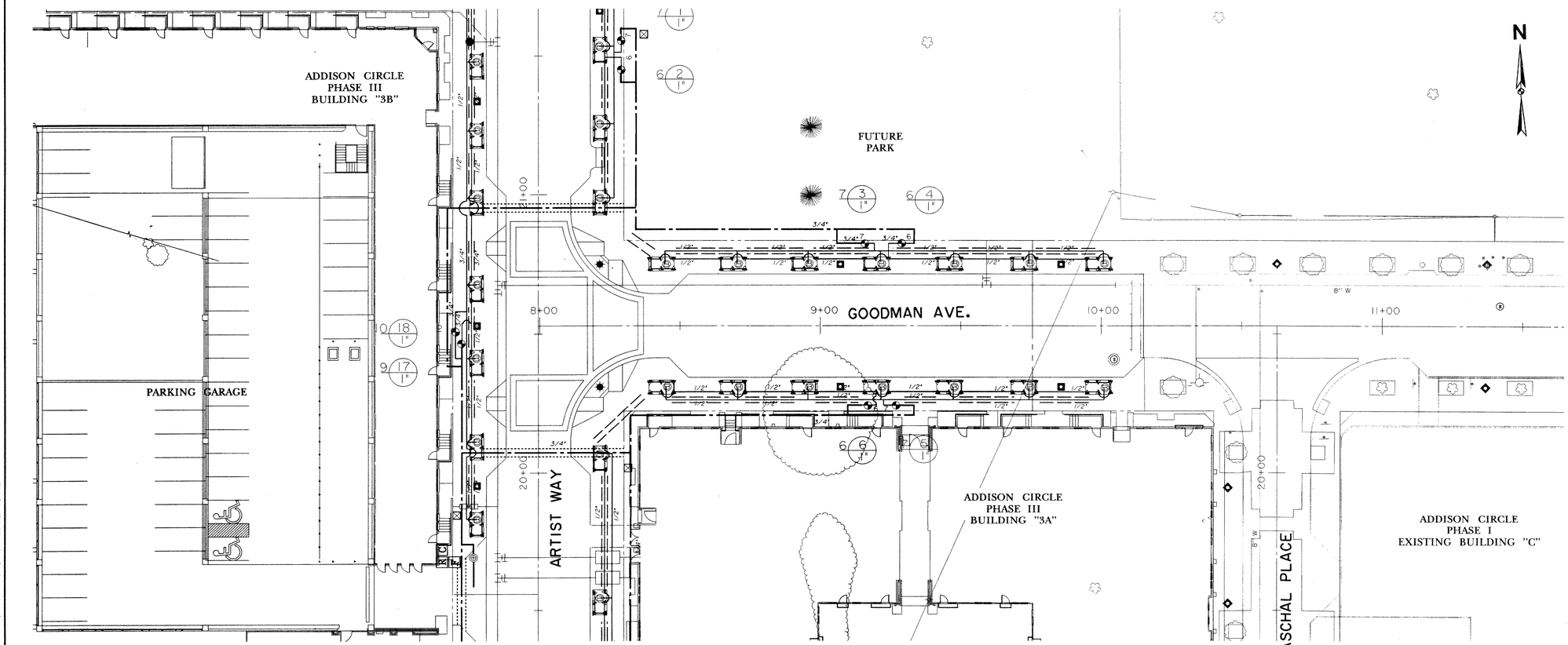

N

0 10 20 30 40
SCALE IN FEET

STATE OF TEXAS
STEPHEN C. BERKENBILE
LICENSED IRRIGATOR

STEPHEN C BERKENBILE & ASSOCIATES
IRRIGATION DESIGN CONSULTANTS
411 HYDE PARK PLACE
DUNCANVILLE, TX 75137
(972) 296-2724
FAX (972) 780-0048

RECORD DRAWING

BENCHMARKS:

BM#5
"□" CUT ON 8' INLET ON NORTH CURB LINE OF GOODMAN AVE. ±75' EAST OF PASCHAL PLACE.
ELEV. 629.98

BM#6
"□" CUT AT ℄ OF 8' INLET AT THE SOUTHWEST CORNER OF MORRIS AVE. AND WITT PLACE.
ELEV. 627.29

BM#7
"□" CUT AT WEST CORNER OF ADDISON THEATRE CENTRE PARKING LOT, SECOND ENTRANCE NORTH OF ADDISON RD.
ELEV. 637.66

DATE	DESCRIPTION	REF NO.
6/23/99	ISSUED FOR CONSTRUCTION	N/A
5/17/99	ISSUED FOR BID	N/A

IRRIGATION PLAN
ARTIST WAY & GOODMAN AVE.

ADDISON CIRCLE
PHASE II-B PUBLIC INFRASTRUCTURE

TOWN OF ADDISON, TEXAS

Huitt - Zollars, Inc.
3131 Mckinney Ave., Suite 600, Dallas, TX 75204
Phone (214) 871-3311/Fax (214) 871-0757

DESIGN	DRAWN	APPR.	SCALE	DATE	PROJECT NO.	NO.
HZI	HZI	SCB	1"=20'	MAR. 99	01-1822-50	IR2

h:\proj\01182250\dgn\AUC3IR02.DGN

B: AUC3BD.DGN; 2-3,8,13,15,20,22-29,32-39,41-52,55-61
PL: AUC3BASE.DGN; 1-3,5,7,10-14,17,18,20,22-24,28,44,49
US: AUC3UTIL.DGN; 1-3,5-10,14-18,20-29,31-34,36-62
UL: AUC3UTIL.DGN; 1,22
TZ: AUC3CONT.DGN; 1-3,5-10,14-18,20-29,31-34,36-62
T3: AUC3TOPO.DGN; 1-3,5-10,14-18,20-29,31-34,36-62
T4: AUC3CONT.DGN; 1-3,5-10,14-18,20-29,31-34,36-62
US: AUC3UTIL.DGN; 1-3,5-10,14-18,20-29,31-34,36-62
PL: AUC3BASE.DGN; 1-3,5,8,10-14,17,18,20,22-24,44,49
IRRI: IRRIBASE.DGN; 3-63
PRF INSTALLISDN-3800000
FI: NONE=BASE file
Ph:\proj\01182250\dgn\AUC3IR02.DGN
Fri Dec 8 14:50:58 2000
Version 8.05.03 [3800]
Huitt-Zollars, Inc.

h:\proj\01182250\dgn\AUC3IR03.DGN
Fri Dec 8 14:21:01 2000
\\HZDALLAS2\DISKO\PLOTTING\400M\AUC3IR03.PRF
Huitt-Zollars, Inc.
PRF ROTATION=90.000000
F:\tbl\MILLER.TBL
B, AUC3BD.DGN, 3-5,8,13,16,20,23-29,32-34,37-39,43-52,58-61
•no ref logical•, •no ref name•, •no ref levels•

IRRIGATION DETAILS

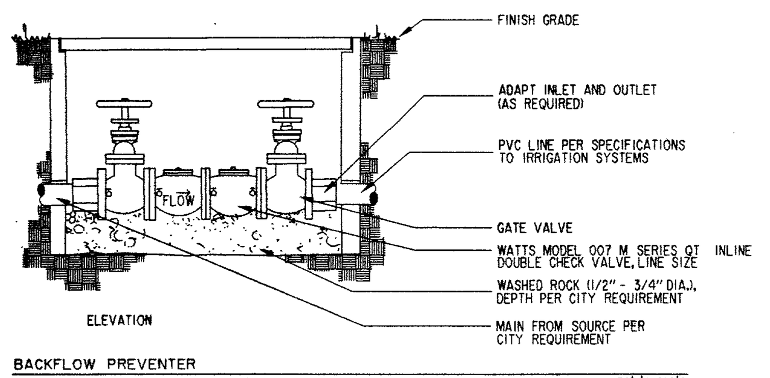

BACKFLOW PREVENTER

not to scale

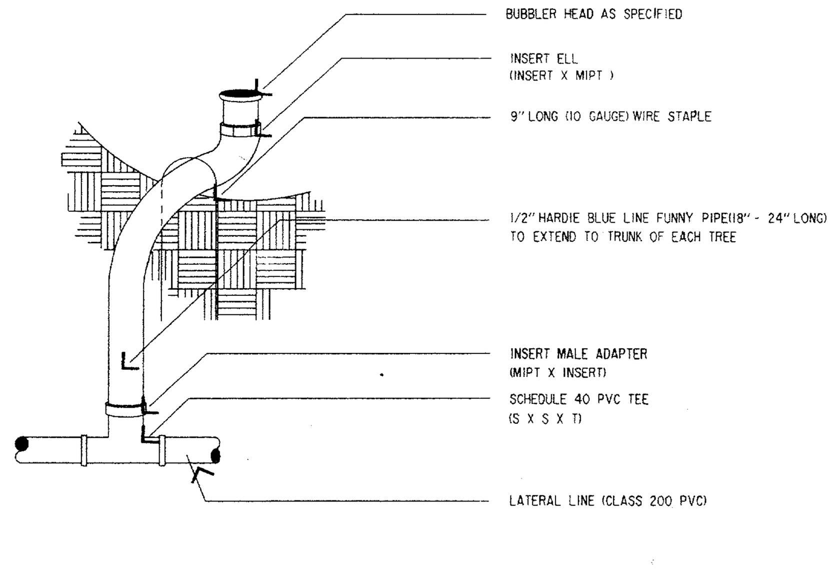

TREE BUBBLER DETAIL

not to scale

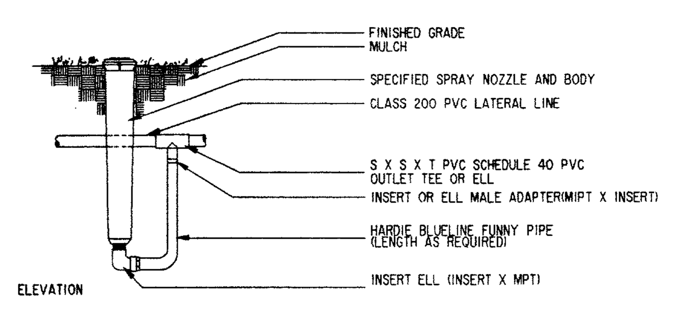

HIGH RISER ASSEMBLY

not to scale

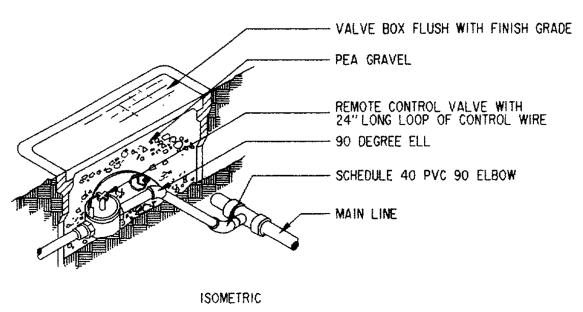

REMOTE CONTROL VALVE

not to scale

IRRIGATION LEGEND

- TORO POP-UP LOW ANGLE SHRUB SPRAY 570 MPR SERIES NO. 15' ON A NO. 570Z 12P BODY.
- HARDIE ADJUSTABLE FLOAT BUBBLER ON ½" FUNNY PIPE (REF. DETAIL)
- QUICK COUPLER VALVE -BUCKNER MODEL 30A AND BALL VALVE.
- WEATHERMATIC 11000 CR SERIES WITH FLOW CONTROL, ELECTRIC REMOTE CONTROL VALVE AND BALL VALVE
- SCHEDULE 40 PVC MAINLINE
- CLASS 200 PVC LATERAL LINE, EXCEPT 1/2 INCH DIAMETER SHALL BE CLASS 315. NOTE: (ALL DIRECTLY BURIED LINE BENEATH PAVING SHALL BE SCHEDULE 40 PVC, ALL LINES UNDER PAVING SHALL BE SLEEVED; NO DIRECT BURIAL ALLOWED.)
- GPM THROUGH VALVE
- VALVE SEQUENCING NUMBER
- SIZE OF VALVE
- MANUAL BALL VALVE-LINE SIZE
- FLOW METER AND MASTER VALVE AND WIRING
- PEDESTAL MOUNTED RAINMASTER WITH PHONE CONNECTION
- 4" CLASS 200 PVC SLEEVE
- 6" CLASS 200 PVC SLEEVE
- IRRIGATION WATER METER & TAPING SLEEVE (PROVIDE 1-1/2" IRRIGATION METER WITH 2" TAP)
- WATTS DOUBLE CHECK VALVE: 1-1/2' #007 M SERIES QT IN FLUSH VALVE BOX WITH 2" TAP.

DESIGNER NOTES

1. LINE LAYOUT IS DIAGRAMMATIC-ADJUST HEAD AND LINE LOCATIONS ON SITE TO ACCOMMODATE EXISTING JOB CONDITIONS, SLEEVE LOCATIONS AND TO ACHIEVE COMPLETE COVERAGE.
2. ALL MAIN LINE PIPING SHALL BE BURIED TO HAVE A MINIMUM COVER OF 18". ALL LATERAL PIPING DOWNSTREAM OF THE MAIN LINE SHALL BURIED TO HAVE A MINIMUM COVER OF 12".
3. ALL VALVE BOXES SHALL BE TEN(10") INCHES BY FOURTEEN(14") INCHES (RECTANGULAR) FOR REMOTE CONTROL VALVES AND BALL VALVES. NINE(9") INCHES(ROUND) FOR QUICK COUPLER VALVES.
4. CONTRACTOR SHALL MAKE MINOR ADJUSTMENTS TO SYSTEM LAYOUT IN FIELD TO INSURE POSITIVE DRAINAGE OF LATERAL LINES AND MAIN LINES.
5. CONTRACTOR SHALL NOTIFY THE LANDSCAPE ARCHITECT, IF THE STATIC PRESSURE IS LESS THAN THE DESIGN STATIC PRESSURE OF 55 PSI.
6. ALL WIRING FROM THE IRRIGATION CONTROLLER TO THE REMOTE CONTROL VALVES SHALL BE UF-14/1 DIRECT BURIAL CABLE.
7. CONTRACTOR SHALL NOT TRENCH IN CRITICAL ROOT ZONE AREA FOR EXISTING TREES.
8. CONTRACTOR SHALL PROVIDE FOR RAINMASTER REMOTE CONTROL SYSTEM.
9. CONTRACTOR SHALL PROVIDE PHONE SERVICE AND ELECTRICAL SERVICE TO THE CONTROLLER.
10. NO FITTINGS WILL BE ALLOWED UNDER PAVED SURFACES.

TOWN OF ADDISON IRRIGATION SPECIFICATIONS

Revised 11/5/98

These revised Town of Addison Irrigation Specifications dated 11/5/98 supersede any and all others. However, any discrepancies between those of the approved construction plans and those of the Town must be brought to the attention of the Town's designated representative for a final determination.

1. Design head to head with no single head coverage. Use appropriate size nozzles for a given landscape area so as not to spray onto or over paved surfaces or structures. Do not exceed manufacturer's recommendations.

2. All main line pipe 2 " and smaller is to be Schedule 40 belled PVC; larger sizes are to be Class 200. Put not more than two (2) pipes in any one trench. Class 200 belled PVC lateral piping is to be used.

3. Fittings: No crosses are permitted. Separate tees and/or elbows by at least 12". Reduction tees are preferred over use of single reducer bushings. Multiple reducer bushings will not be accepted. Only Spears and/or Lasco are permitted. Allow 18" outside of sleeve before first fitting. No 45 degree elbows on 1" and larger pipe are allowed without prior approval.

4. Wiring: 14 ga. UF. Red - Control wires. White - Ground. Anytime wiring changes direction, such as at an elbow or tee, allow a loop at least one hand width (10 inches) alongside the fitting at that location. Only continuous wire runs are permissible unless otherwise approved. Wire should follow mainline where possible and lay along a single side not crossing over lateral lines.

5. Use King connectors for all station wire splices. Allow at least 36" of pigtailed wire at each splice. All valve splices are to be housed in standard (large) Ametek rectangular plastic valve boxes. All field splices are to be in 10" round Ametek plastic valve boxes.

6. Only Weathermatic 11000 Series plastic valves are permitted. They are to be located within standard (large) Ametek rectangular plastic valve boxes with 4"-6" of pea gravel placed underneath the valve in such a manner as to prevent soil infiltration into the box. The pea gravel should only contact the bottom of the valve body.

7. Only Buckner Model 30A single lug ¾" QCV's are permitted. They are to be connected to a threaded fitting. Teflon paste and appropriate length gray Schedule 80 nipples and Schedule 40 fittings are to be used. Secure to 18"x½" steel rebar with stainless steel screw clamp. House QCV in a 10" round plastic Ametek valve box.

8. All heads are to be attached to threaded fittings via 6" Lasco polyethylene nipples cut to the appropriate length. All nozzle sizes will be designated on the plans.

Pop-ups: Only Toro 570C Series are permitted, unless otherwise approved. Install ¾" above finished grade. Turf - 4" (includes tree bubblers within turf areas, use Toro SB-PC nozzles). Very low ground cover (<6" mature height) - 6" HP. Ground cover and low growing shrubs - 12" HP; use Hardie Blue Line funny pipe and Toro barb fittings utilizing side inlet.

Bubblers: Bed areas only. Use Hardie adjustable flood bubblers.

Rotaries: Only Hunter PGP Series are permitted, unless otherwise noted. Install ¾" above finished grade.

Risers: Use Type-M copper with soldered male ends for Toro 570-S shrub adapters and female ends to attach to short polyethylene nipples screwed into threaded fittings. Owner reserves the right to determine placement of risers versus pop-ups.

9. Only Hersey MVR meters and three (3) brass flanges are acceptable. Meter lay lengths must be in accordance with Town of Addison's Public Works Department specifications. Stainless steel bolts and nuts must be used in the installation along with neoprene gaskets. House in appropriate size, (to be determined by Owner), concrete box with lid. To bring box to ground level use bricks or pavers, and backfill inside below meter base with at least 6" of pea gravel. Connection to main must be approved and inspected by the Town's Utilities Department and all tap materials are to be purchased at the expense of the contractor and must comply with the Town's specifications. A permit is also required.

10. Only Watts 007 M Series inline check valve assemblies are to be used. Connect to meter flange using Teflon paste and gray Schedule 80 nipple of sufficient length to center the DCA within its housing. House in appropriate size, (to be determined by Owner), rectangular Ametek plastic valve box. See above meter installation instructions and follow same with the exception of using plastic valve box extensions for increased height. Connect irrigation mainline to DCA using Teflon paste and PVC male adapter.

11. Female threaded plastic Spears ball valves with positive T-handle cut off must be installed every 200' of mainline for isolation purposes. House in standard (large) rectangular Ametek plastic valve box and follow meter box installation instructions for DCA assembly.

12. Only an approved size RainMaster Evolution DX-2 stainless steel controller with heavy duty transient protection along with a stainless steel free-standing pedestal is permitted. Controller must include all necessary hardware to ensure reliable communication and operation with the Town's central control located at 16801 Westgrove. Installation must include the following RainMaster hardware, purchased only from a RainMaster supplier: DX-03 sensor board, DX-PH phone communication option, flow meter (size to be approved by owner), and shielded EV-cab-Sen flowmeter cable. An approved size Weathermatic 11000 series master valve must also be installed with wiring being of a solid color distinctively different than that of the station wiring. Both flow meter and master valve must be housed in Ametek large rectangular plastic valve boxes. Flow meter cable must be sized appropriately and be of a continuous run; no splices will be allowed except at the point of connection to the flow meter. Connections will be soldered and water proofed using a 3-M DBY connector. Cab-Sen cable will be installed within continuous ¾" or larger gray PVC conduit with 6" or larger J-boxes placed every 200' or where 360° of fittings are installed; only sweeps are permitted. It is the contractor's responsibility to entail the cost of and work in conjunction with Southwestern Bell Telephone to establish a dedicated phone service and install an interface within the pedestal at each controller location via direct burial cable. Controllers are to be affixed to a Town-approved permanent concrete pad via four (4) 7/16" or larger stainless steel bolts, nuts and washers. All wiring is to enter the pedestal via approved size gray PVC sweep elbows extending at least 1" through the pad. Control wiring, 120-volt service, flow meter cable, and phone cables are to be separated with each having its own access elbow. All local and national codes must conform to any and all aspects of the installation. All controllers are to be wired for remote operation with Irritrol RVC units; to achieve this utilize appropriate size universal pigtail adapters. The entire installation must conform to RainMaster specifications and be approved by the Town prior to, and be inspected during installation. Such specifications will include grounding and pad configurations and distances of separation from water meter to master valve to flow meter and first fitting. Additional hardware, if applicable, will be needed to control remote devices such as lighting, fountains, or booster pumps; these will also be the responsibility of the contractor to supply, install and ensure proper operation. The Town of Addison may also specify the installation of a RainMaster ET Tracker and any related equipment to make it a functional component of the computer-controlled system. A functional mini-click freeze sensor must be installed at every controller in an approved location and by an approved method. Consult RainMaster for specifics of freeze sensor installation.

13. Use clean and approved topsoil to backfill all pipe to a depth. All heads and boxes are to be backfilled to grade with clean top soil. No rocks greater than 1" are allowed. Compact trenches to alleviate settling. Minimal depth of coverage is 12".

14. All sleeves 2" and smaller will be Schedule 40 PVC with size and location noted on the plan. Larger sizes will be Class 200. All piping underneath paving, including sidewalks, must be sleeved. All sleeves are to be belled PVC pipe.

15. Use appropriate and approved PVC solvent. Avoid excessive use and wipe all joints and fittings clean.

16. The installer is responsible for resetting head and/or box height due to settling. Contractor must supply a workmanship warranty for (1) year from date of completion.

17. All work is to be accomplished by or directly supervised at all times by an on-site irrigator licensed by the State of Texas.

18. Prior to any backfilling of trenches, an inspection by the Town's representative must take place and any necessary changes implemented; otherwise, manual excavation to enable proper inspection will be necessary.

19. Valve sequencing must be performed by the contractor and in an order approved by the Town's representative. At least 6" of extra station wiring within the bottom of the pedestal is necessary for each zone and must be of neat and orderly appearance.

20. Plans are diagrammatic and field adjustments are often necessary. For this reason, prior to trenching, head layout with flags needs to be done and locations approved by Town's representative. Not doing so may result in the relocation of heads at the contractor's expense.

21. Any deficiencies in coverage noted by the Town's inspector will be rectified at the cost of the contractor.

22. Water taps will be 2" in size. All parts must conform to Town of Addison Water Department specifications and are the responsibility of the contractor to provide. Inspection of taps by Water Department representative must occur. Excavation and tap permits are required. Meters are to be 1½" in size and again conform to Water Department specifications for type and installation along with meter boxes and backfilling procedures. Contact: Addison Utilities Department at (972) 450-2871.

23. All paving must have Town-approved sleeve sizes and quantities present. It is the responsibility of the contractor to notify the Town of any area where sleeving should be present but is not and provide such materials at his cost. Any paving installed without sleeving will necessitate a bore and subsequent sleeving at the contractor's expense.

24. RainMaster controllers and associated hardware will be utilized on the job. Reference Town's Irrigation Specifications for this aspect of the job. Note: separate stations may be necessary for operation of lights, fountains, etc.; additional hardware is also needed and is to be purchased and installed by the contractor. For part numbers and pricing of any RainMaster equipment, contact Matt Swor of Longhorn, Inc. at (972) 406-0222. For technical questions, ~~contact John Terosian~~ of RainMaster at (800) 777-1477.

25. Communication is the key. If you are unsure - CALL Ron Lee, Addison Parks Department, (972) 450-2851.

RECORD DRAWING

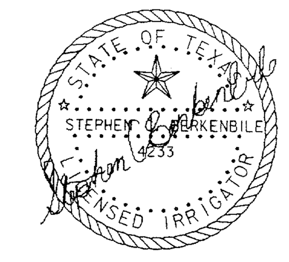

STEPHEN C BERKENBILE & ASSOCIATES
IRRIGATION DESIGN CONSULTANTS
411 HYDE PARK PLACE
DUNCANVILLE, TX 75137
(972) 296-2724
FAX (972) 780-0048

DATE	DESCRIPTION	REF NO.
6/23/99	ISSUED FOR CONSTRUCTION	N/A
5/17/99	ISSUED FOR BID	N/A

IRRIGATION DETAILS

ADDISON CIRCLE

PHASE II–B PUBLIC INFRASTRUCTURE

TOWN OF ADDISON, TEXAS

Huitt - Zollars, Inc.
3131 Mckinney Ave., Suite 600, Dallas, TX 75204
Phone (214) 871-3311/Fax (214) 871-0757

DESIGN	DRAWN	APPR.	SCALE	DATE	PROJECT NO.	NO.
HZI	HZI	SCB	N.T.S.	MAR. 99	01-1822-50	IR3

h:\proj\01182250\dgn\AUC3IR03.DGN