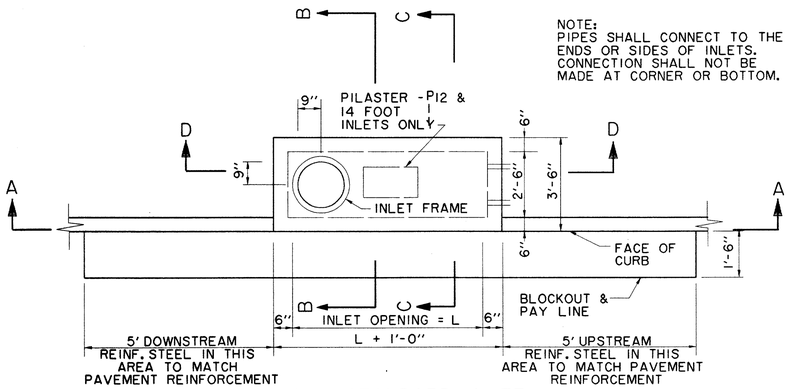

PLAN - STANDARD INLET
N.T.S.

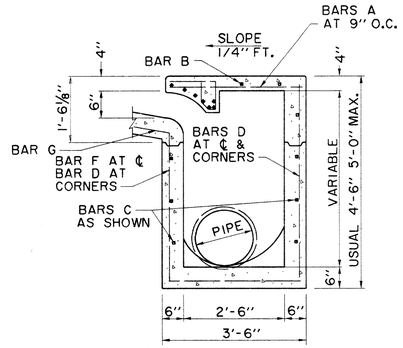

SECTION B-B
6' & 8' INLETS
N.T.S.

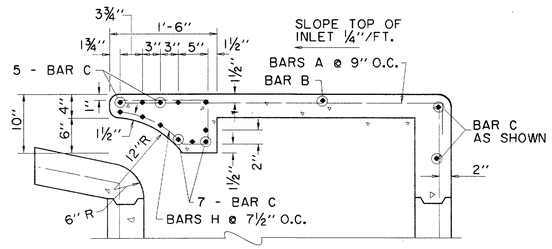

SECTION C-C - DETAIL
6' & 8' INLETS
N.T.S.

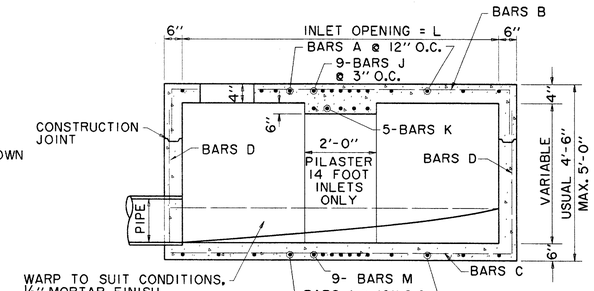

SECTION D-D
14' INLET
N.T.S.

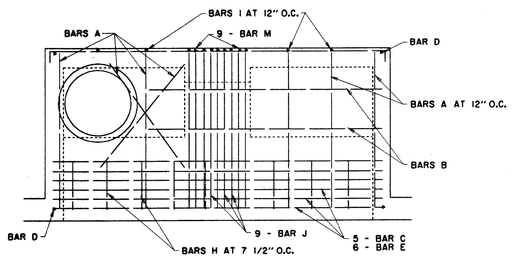

INLET PLAN
N.T.S.

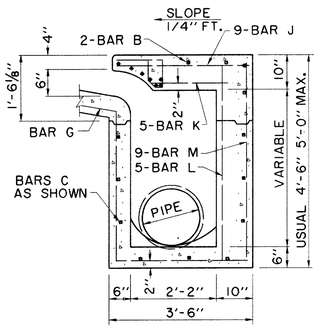

SECTION B-B
10' & 14' INLETS
N.T.S.

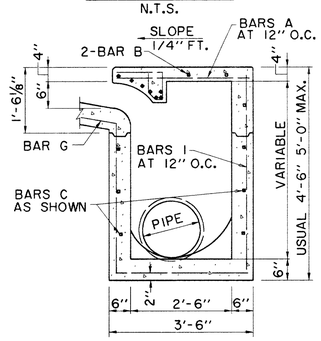

SECTION C-C
10' & 14' INLETS
N.T.S.

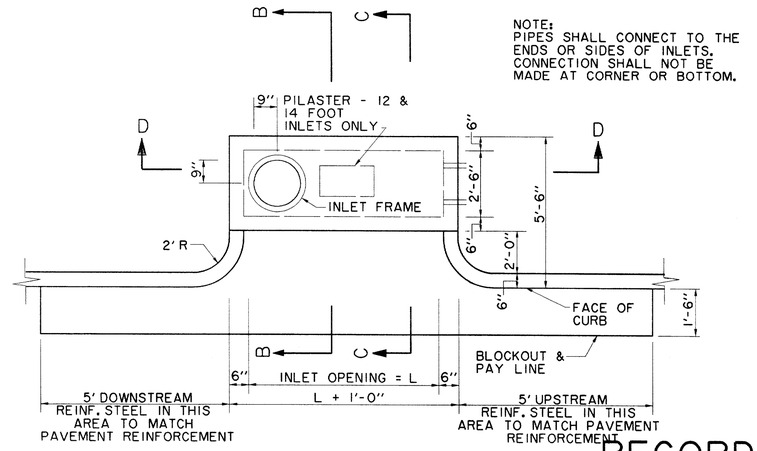

PLAN - MODIFIED RECESSED INLET
N.T.S.

RECORD DRAWING

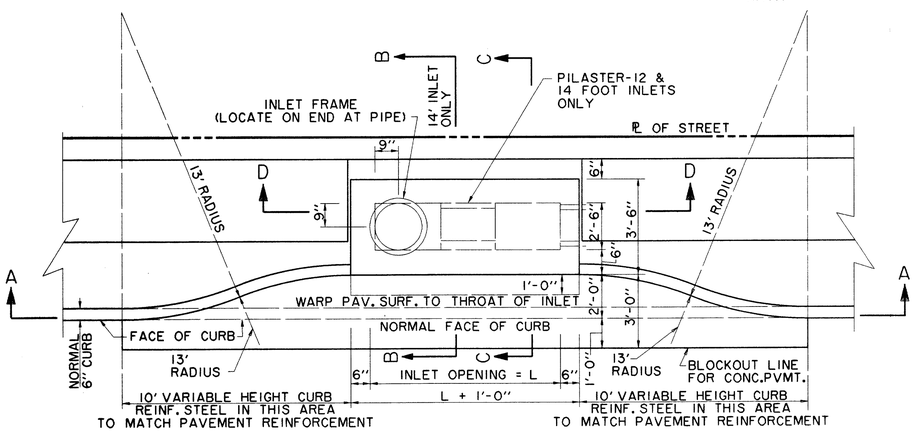

PLAN - RECESSED INLET
N.T.S.

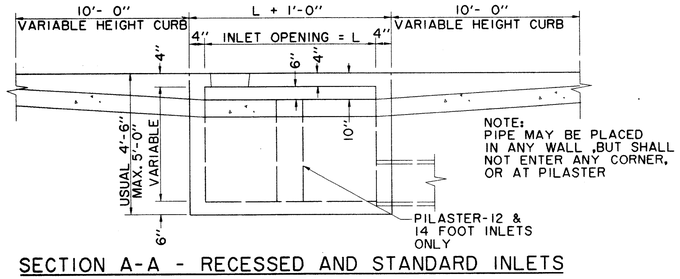

SECTION A-A - RECESSED AND STANDARD INLETS
6, 8, 10 & 14 FOOT INLETS
N.T.S.

REINFORCING STEEL SCHEDULE

DIMENSION SHOWN ARE FOR MAXIMUN SIZE INLETS

INLET LENGHT	BAR TYPE	BAR DIA. (1/8IN)	NO. REQ'D	BAR DIMENSIONS A	B	C
6	A	3	9	3'-2''	0'-3''	
	B	3	1	4'-10''		
	C	4	15	6'-8''	0'-6''	
	D	4	5	4'-8''		
	F	4	1	3'-2''		
	G	3	5	2'-0''	1'-3''	
	H	6	6	•	•	•
	N	3	3	3'-2''	3'-2''	3'-2''
8	A	3	12	3'-2''	0'-3''	
	B	3	1	6'-10''		
	C	4	15	8'-8''	0'-6''	
	D	4	5	4'-8''		
	F	4	1	3'-2''		
	G	3	5	2'-0''	1'-3''	
	H	6	8	•	•	•
	N	3	3	3'-2''	3'-2''	3'-2''
10	A	3	10	3'-2''	0'-3''	
	B	3	2	8'-10''		
	C	4	16	10'-8''	0'-6''	
	D	4	4	4'-8''		
	E	5	6	10'-8''		
	G	3	5	2'-0''	1'-3''	
	H	3	15	•	•	•
	I	4	8	4'-8''	3'-2''	3'-2''
	L	4	5	4'-3''		
12	A	3	12	3'-2''	0'-3''	
	B	3	2	10'-10''		
	C	4	16	12'-8''	0'-6''	
	D	4	4	4'-8''		
	E	5	6	12'-8''		
	G	3	5	2'-0''	1'-3''	
	H	3	18	•	•	•
	I	4	10	4'-8''	3'-2''	3'-2''
	J	5	9	3'-2''	1'-3''	
	K	4	5	2'-3''		
	L	4	5	4'-3''		
	M	5	9	4'-3''	3'-2''	3'-9''
14	A	3	14	3'-2''	0'-3''	
	B	3	2	10'-10''		
	C	4	16	14'-8''	0'-6''	
	D	4	4	4'-8''		
	E	5	6	14'-8''		
	G	3	5	2'-0''	1'-3''	
	H	3	21	•	•	•
	I	4	12	4'-8''	3'-2''	3'-2''
	J	5	9	3'-2''	1'-3''	
	K	4	5	2'-3''		
	L	4	5	4'-3''		
	M	5	9	4'-3''	3'-2''	3'-9''

• SEE DIAGRAM FOR DIMENSIONS

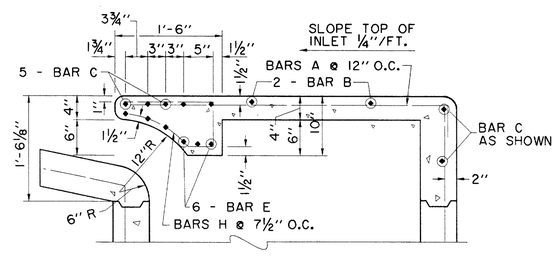

SECTION C-C - DETAIL
10' & 14' INLETS
N.T.S.

BAR DIAGRAMS

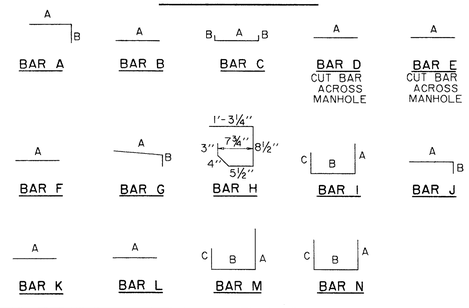

THE SEAL APPEARING ON THIS DOCUMENT WAS AUTHORIZED BY DAVID E. MEYERS, P.E. 81512

STATE OF TEXAS — DAVID E. MEYERS — 81512 — REGISTERED PROFESSIONAL ENGINEER — 12/18/00

DATE	DESCRIPTION	REF NO.
6/23/99	ISSUED FOR CONSTRUCTION	N/A
5/17/99	ISSUED FOR BID	N/A

STORM WATER DETAILS

ADDISON CIRCLE

PHASE II-B PUBLIC INFRASTRUCTURE

TOWN OF ADDISON, TEXAS

Huitt - Zollars, Inc.
3131 Mckinney Ave., Suite 600, Dallas, TX 75204
Phone (214) 871-3311/Fax (214) 871-0757

DESIGN	DRAWN	APPR.	SCALE	DATE	PROJECT NO.	NO.
HZI	HZI	DEM	N.T.S.	MAR. 99	01-1822-50	SW9