E NUA-1
SHEET NO. 5

DETAIL #7

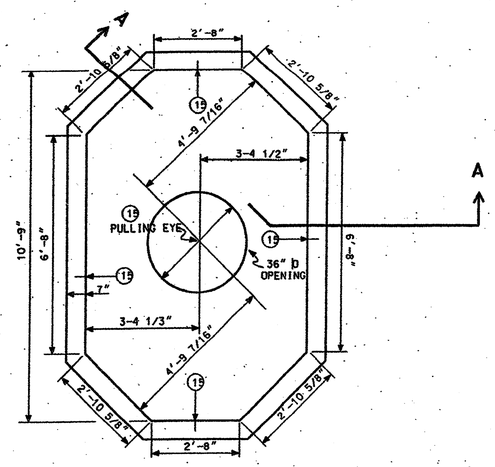

PLAN VIEW

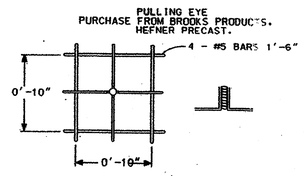

PULLING EYE DETAIL
5 REQUIRED

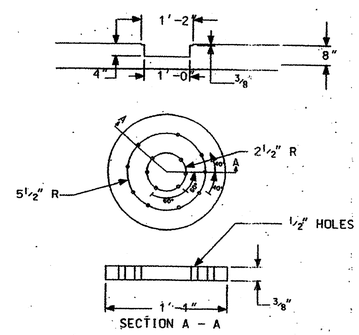

SUMP DETAIL

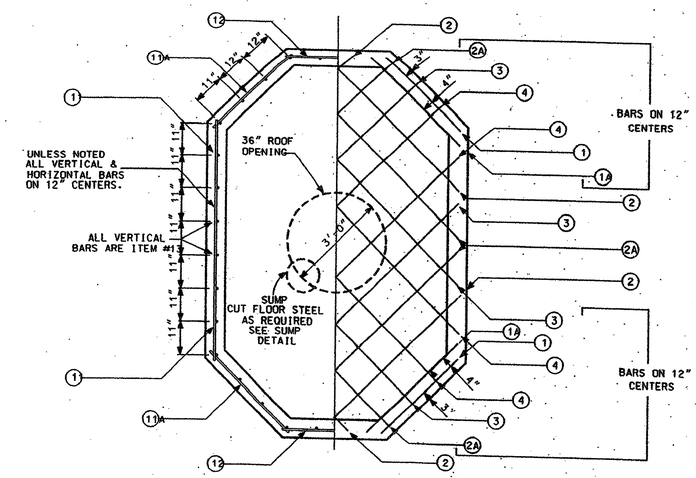

WALL STEEL

FLOOR STEEL

AS-BUILT
NOVEMBER 4, 2004

NOTE:
THESE PLANS HAVE BEEN REVISED TO CONFORM WITH CONSTRUCTION RECORDS PROVIDED BY CONTRACTOR.

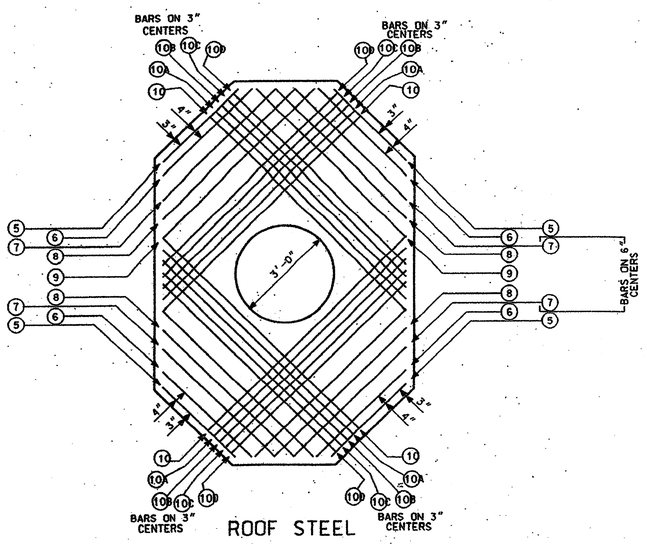

ROOF STEEL

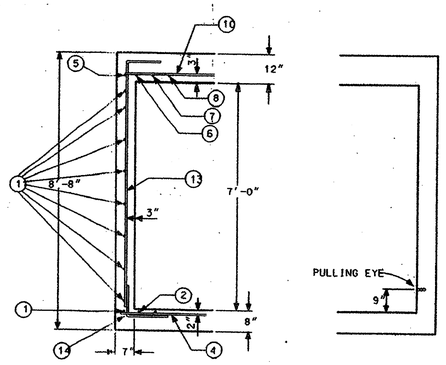

SECTION A - A

MATERIALS FOR POURED IN PLACE MANHOLE

MARK	LENGTHS FT.	LENGTHS IN.	QUANTITY FLOOR	QUANTITY WALLS	QUANTITY ROOF	TOTAL	SHAPE	SIZE
1	3	3	4			13'-0"	ST.	#5
1A	3	10	4			15'-4"	ST.	#5
2	5	10	4			23'-4"	ST.	#5
2A	7	7	4			30'-4"	ST.	#5
3	8	7	4			34'-4"	ST.	#5
4	9	7	4			38'-4"	ST.	#5
5	3	2			4	12'-8"	ST.	#5
6	3	10			4	15'-4"	ST.	#5
7	4	10			4	19'-4"	ST.	#5
8	5	8			4	22'-8"	ST.	#5
9	6	6			4	26'-0"	ST.	#5
10	8	6			4	34'-0"	ST.	#5
10A	8	3			4	33'-0"	ST.	#5
10B	8	0			4	32'-0"	ST.	#5
10C	7	9			4	31'-0"	ST.	#5
10D	7	6			4	30'-0"	ST.	#5
11	7	4		16		117'-4"	ST.	#5
11A	3	5		32		109'-4"	ST.	#5
12	3	2		16		50'-8"	ST.	#5
13	8	9		36		315'-0"	7'-8"	#5
14	3	4	36		4	120'-0"	2' 1'-4"	#5
15			1	4		5'-0"	PULLING EYE	1 1/2" X 6" BOX
CONCRETE			1.94 CU.YDS	5.35 CU.YDS	3.85 CU.YDS	11.14 CU.YDS	3000 PSI	

MANHOLE COVER & FRAME TU STD 310-050 — 1 EA.
VENDOR: WESTERN IRON WORKS, 21 EAST SIXTH ST. SAN ANGELO TX. 76903
OR: HEFNER PRECAST, DIVISION OF BROOKS PRODUCTS, 2229 NORTH MAIN, CLEBURNE TX. 76031 — 3'-0" OPENING

STEEL TO CONFORM TO THE LATEST STANDARD SPECIFICATION FOR DEFORMED BILLET-STEEL BARS FOR CONCRETE REINFORCEMENT.

SEE DETAIL #9 FOR CONCRETE SPECIFICATION

GENERAL NOTES SIMILAR TO TYPE "B" MANHOLE, SHEET #1.

"TYPE - 2-WAY"
10'-9" X 6'-9" X 7'-0"

CD

TU ELECTRIC

DWG TYPE	UNIT ID	REVISION DESCRIPTION	DATE	NO.	W.A.	APP. PRM	APP. JES	ENG. JRC	CH. JRC	DWN. MED	DATE 06-12-92

ESTIMATE | W.A. | LIST OF DRAWINGS

DRAWN | CH. | APP. | APP.

SCALE (H=) (V=1/2"=1'-)

NETWORK UNDERGROUND APPURTENANCE SHEETS MANHOLE DETAILS

E NUA-1
SHEET NO.

C39

©Copyright 2003 Brockette/Davis/Drake, Inc. All Rights Reserved. This drawing is the property of Brockette/Davis/Drake, Inc. Any modification or use of this drawing without the express written authorization of Brockette/Davis/Drake, Inc. is prohibited.

C03393\PLANS CD\39-DB-DET-PV.DWG