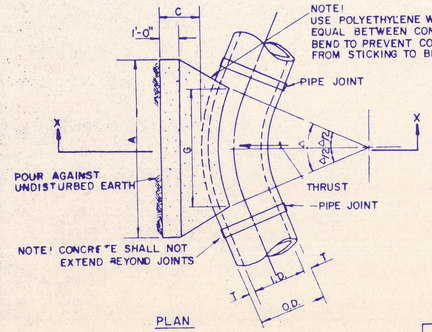

PLAN

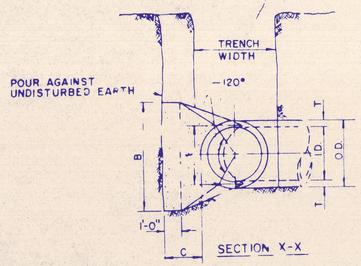

SECTION X-X

I.D. (IN.)	T IN.	C 11.25° FT.	C 22.50° FT.	E FT.
4,6,8	0.4	1.5	1.5	0.9
10,12	0.5	1.5	1.5	1.2
16,18	0.6	1.5	1.5	1.6
20	0.7	1.5	1.5	1.8
24	0.9	1.5	1.5	2.1
30	2.9	1.5	1.9	2.6
36	4.5	1.5	2.3	3.3
42	5.0	1.8	2.6	3.8
48	5.5	2.0	3.0	4.3
54	6.0	2.3	3.4	4.8
60	6.5	2.5	3.8	5.3
66	6.8	2.8	4.1	5.7
72	7.5	3.0	4.5	6.3
78	7.5	3.3	4.9	6.7
84	8.0	3.5	5.3	7.2
90	8.5	3.8	5.6	7.7
96	9.0	4.0	6.0	8.2

I.D. (IN.)	Δ = 11.25°								Δ = 22.50°							
	G FT	THRUST TONS	EARTH A FT	EARTH B FT	EARTH VOL. C.Y.	ROCK A FT	ROCK B FT	ROCK VOL. C.Y.	I.D. (IN.)	G FT	THRUST TONS	EARTH A FT.	EARTH B FT.	EARTH VOL. C.Y.	ROCK A FT	ROCK B FT	ROCK VOL. C.Y.
4,6,8	0.4	1.0	1.0	1.5	0.1	1.0	1.0	0.1	4,6,8	0.8	2.0	1.5	1.5	0.1	1.0	1.0	0.1
10,12	0.6	2.2	1.5	1.5	0.1	1.0	1.5	0.1	10,12	1.1	4.4	2.0	2.5	0.3	1.5	1.5	0.1
16,18	0.8	5.0	2.0	2.5	0.3	1.5	2.0	0.2	16,18	1.6	9.9	3.0	3.5	0.6	2.0	2.5	0.3
20	0.9	6.2	2.0	3.5	0.4	1.5	3.0	0.3	20	1.8	12.3	3.5	3.5	0.7	2.0	3.5	0.4
24	1.1	8.9	3.0	3.0	0.5	1.5	3.0	0.3	24	2.2	17.7	4.0	4.5	1.0	3.0	3.0	0.5
30	1.4	10.4	3.0	3.5	0.6	2.0	3.5	0.4	30	2.7	20.7	5.0	4.5	1.5	3.0	4.0	0.8
36	1.7	15.0	3.5	4.5	0.9	2.0	4.0	0.5	36	3.3	29.8	5.5	5.5	2.3	4.0	4.0	1.3
42	1.9	20.4	4.5	5.0	1.5	2.5	5.0	0.8	42	3.8	40.5	7.0	6.0	3.9	4.5	5.0	2.1
48	2.2	26.6	4.5	6.0	2.0	2.5	6.0	1.1	48	4.4	52.9	8.0	7.0	5.7	4.5	6.0	2.8
54	2.5	33.7	6.0	6.0	3.0	3.0	6.0	1.4	54	4.9	67.0	9.0	8.0	8.0	6.0	6.0	4.1
60	2.7	41.6	6.0	7.0	3.8	3.0	7.0	1.8	60	5.5	82.7	9.5	9.0	10.6	6.0	7.0	5.3
66	3.0	50.3	6.5	8.0	5.1	3.5	8.0	2.7	66	6.0	100.1	10.5	10.0	14.1	6.5	8.0	7.2
72	3.3	59.9	7.5	8.0	6.3	4.0	8.0	6.3	72	6.6	119.1	11.0	11.0	17.6	7.5	8.0	9.1
78	3.6	70.2	8.0	9.0	8.1	4.0	9.0	3.9	78	7.1	139.8	12.0	12.0	22.5	8.0	9.0	11.7
84	3.8	81.5	8.5	10.0	10.3	4.5	10.0	5.3	84	7.6	162.1	13.0	12.5	27.2	8.5	10.0	14.8
90	4.1	93.5	9.5	10.0	12.2	5.0	10.0	6.3	90	8.2	186.1	14.0	13.5	33.7	9.5	10.0	17.7
96	4.4	106.4	10.0	11.0	15.0	5.0	11.0	7.4	96	8.7	211.7	15.0	14.5	41.2	10.0	11.0	21.8

I.D. (IN.)	Δ = 30°								I.D. (IN.)	Δ = 45°							
	G FT.	THRUST TONS	EARTH A FT.	EARTH B FT.	EARTH VOL. C.Y.	ROCK A FT.	ROCK B FT.	ROCK VOL. C.Y.		G FT.	THRUST TONS	EARTH A FT.	EARTH B FT.	EARTH VOL. C.Y.	ROCK A FT	ROCK B FT.	ROCK VOL. C.Y.
4,6,8	1.0	2.6	2.0	1.5	0.2	1.0	1.5	0.1	4,6,8	1.5	3.9	2.0	2.0	0.2	1.5	1.5	0.1
10,12	1.5	5.9	2.5	2.5	0.3	2.0	1.5	0.2	10,12	2.2	8.7	3.5	2.5	0.5	2.0	2.5	0.3
16,18	2.2	13.2	3.5	4.0	0.8	2.5	3.0	0.8	16,18	3.2	19.5	4.5	4.5	1.2	3.0	3.5	0.6
20	2.4	16.3	4.5	4.0	1.0	3.0	3.0	0.5	20	3.6	24.1	5.5	4.5	1.5	3.5	3.5	0.7
24	2.9	23.4	6.0	4.0	1.4	3.5	3.5	0.7	24	4.3	34.6	8.0	4.5	2.3	4.5	4.0	1.1
30	3.6	27.5	5.5	5.0	1.9	3.5	4.0	0.9	30	5.4	40.6	8.5	5.0	3.2	5.5	4.0	1.6
36	4.4	38.5	7.0	6.0	3.4	4.5	4.5	1.6	36	6.5	58.5	10.0	6.0	5.3	6.5	4.5	2.6
42	5.1	53.8	8.0	7.0	5.1	5.5	5.0	2.5	42	7.5	79.6	11.5	7.0	8.1	8.0	5.0	4.2
48	5.8	70.3	9.0	8.0	7.4	6.0	6.0	3.7	48	8.6	104.0	13.0	8.0	11.9	9.0	6.0	6.3
54	6.5	89.0	10.0	9.0	10.3	7.0	6.5	5.3	54	9.7	131.5	15.0	9.0	17.1	10.5	6.5	8.9
60	7.3	110.0	11.0	10.0	13.9	7.5	7.5	7.3	60	10.7	162.4	16.5	10.0	23.1	11.0	7.5	12.0
66	8.0	132.9	12.5	11.0	18.9	8.5	8.0	9.6	66	11.8	196.5	18.0	11.0	30.1	12.0	8.5	16.2
72	8.7	158.2	13.5	12.0	24.0	9.0	9.0	12.3	72	12.9	233.9	19.5	12.0	38.6	14.0	8.5	20.7
78	9.4	185.6	14.5	13.0	30.0	10.0	9.5	15.6	78	13.9	274.5	21.5	13.0	49.8	14.5	9.5	25.9
84	10.1	215.3	15.5	14.0	37.1	10.5	10.5	19.5	84	15.0	318.4	23.0	14.0	61.2	15.5	10.5	32.6
90	10.9	247.1	16.5	15.0	45.0	11.5	11.0	23.9	90	16.1	365.5	24.5	15.0	74.5	17.0	10.5	39.6
96	11.6	281.2	18.0	16.0	55.5	12.5	11.5	28.9	96	17.1	415.6	26.0	16.0	89.5	18.0	11.5	48.5

I.D. (IN.)	Δ = 67.50°								I.D. (IN.)	Δ = 90°							
	G FT	THRUST TONS	EARTH A FT.	EARTH B FT.	EARTH VOL. C.Y.	ROCK A FT.	ROCK B FT.	ROCK VOL. C.Y.		G FT.	THRUST TONS	EARTH A FT.	EARTH B FT.	EARTH VOL. C.Y.	ROCK A FT	ROCK B FT.	ROCK VOL. C.Y.
4,6,8	2.1	5.6	3.0	2.0	0.3	2.0	1.5	0.2	4,6,8	2.7	7.1	5.0	1.5	0.4	2.0	2.0	0.2
10,12	3.1	12.6	5.5	2.5	0.8	3.5	2.0	0.4	10,12	4.0	16.0	6.5	2.5	1.0	3.0	2.5	0.5
16,18	4.7	28.3	7.5	4.0	1.9	5.0	3.0	0.9	16,18	6.0	36.0	9.0	4.0	2.4	4.0	4.0	1.0
20	5.2	34.9	9.0	4.0	2.3	5.5	3.5	1.2	20	6.6	44.4	10.0	4.5	3.1	6.0	4.0	1.5
24	6.2	50.3	11.5	4.5	3.5	6.5	4.0	1.6	24	7.9	64.0	14.5	4.5	5.0	8.0	4.0	2.1
30	7.8	58.9	12.0	5.0	4.8	7.5	4.0	2.2	30	9.9	75.0	15.0	5.0	6.7	10.0	4.0	3.3
36	9.4	84.9	14.5	6.0	8.2	9.5	4.5	3.8	36	11.9	108.0	18.0	6.0	11.4	12.0	4.5	5.3
42	10.9	115.5	17.0	7.0	12.8	11.0	5.5	6.3	42	13.9	147.0	21.0	7.0	17.8	14.0	5.5	8.7
48	12.5	150.9	19.0	8.0	18.4	13.0	6.0	9.2	48	15.9	192.0	24.0	8.0	26.2	16.0	6.0	12.4
54	14.0	191.0	21.5	9.0	26.0	15.0	6.5	12.9	54	17.9	243.0	27.0	9.0	36.9	18.0	7.0	18.1
60	15.6	235.8	24.0	10.0	35.6	16.0	7.5	17.6	60	19.9	299.8	30.0	10.0	50.3	20.0	7.5	24.0
66	17.1	285.3	26.0	11.0	46.0	18.0	8.0	23.0	66	21.8	362.8	33.0	11.0	66.2	22.0	8.5	32.5
72	18.7	339.5	28.5	12.0	57.8	19.0	9.0	28.4	72	23.8	431.8	36.0	12.0	85.6	24.0	9.0	41.0
78	20.2	398.5	31.0	13.0	75.7	21.0	9.5	37.4	78	25.7	506.7	39.0	13.0	108.2	26.0	10.0	53.2
84	21.8	462.1	33.5	14.0	94.7	22.0	10.5	46.5	84	27.7	587.7	42.0	14.0	134.4	28.0	10.5	64.8
90	23.3	530.5	35.5	15.0	114.4	24.5	11.0	58.2	90	29.0	674.6	45.0	15.0	164.9	30.0	11.5	81.2
96	24.9	603.8	38.0	16.0	138.9	25.5	12.0	70.0	96	31.6	767.5	48.0	16.0	199.0	32.0	12.0	95.1

HORIZONTAL BEND THRUST BLOCK

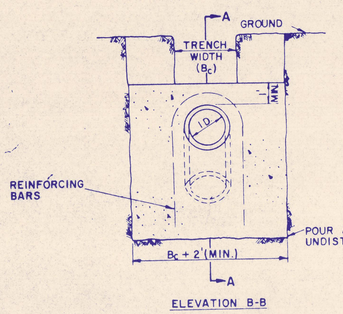

ELEVATION B-B

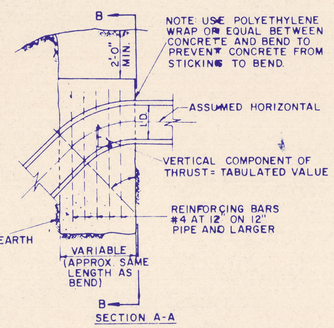

SECTION A-A

Δ	11.25°		22.50°		30°		45°		67.50°		90°		Δ
I.D. (IN.)	THRUST TONS	VOL C.Y.	THRUST TONS	VOL C.Y.	THRUST TONS	VOL C.Y.	THRUST TONS	VOL C.Y.	THRUST TONS	VOL C.Y.	THRUST TONS	VOL C.Y.	I.D. (IN.)
4,6,8	1.0	0.5	2.0	1.0	2.5	1.3	3.6	1.8	4.6	2.3	5.0	2.5	4,6,8
10,12	2.2	1.1	4.3	2.2	5.7	2.8	8.0	4.0	10.5	5.2	11.3	5.7	10,12
16,18	5.0	2.5	9.7	4.9	12.7	6.4	18.0	9.0	23.5	11.8	25.5	12.7	16,18
20	6.1	3.1	12.0	6.0	15.7	7.9	22.2	11.1	29.2	14.5	31.4	15.7	20
24	8.2	4.4	17.3	8.7	22.6	11.3	32.0	16.0	41.8	20.9	45.2	22.6	24
30	10.5	5.2	20.3	10.1	26.5	13.3	37.5	18.8	49.0	24.5	53.1	26.5	30
36	14.9	7.5	29.2	14.6	38.2	19.1	54.0	27.0	70.5	35.3	76.4	38.2	36
42	20.3	10.1	39.8	19.9	52.0	26.0	73.5	36.7	96.0	48.0	104.0	52.0	42
48	26.5	13.2	51.9	26.0	67.9	33.9	96.0	48.0	126.0	62.7	136.0	67.9	48
54	33.5	16.8	65.7	32.9	85.9	42.9	122.0	60.7	159.0	79.4	172.0	85.9	54
60	41.4	20.7	81.2	40.6	106.0	53.0	150.0	75.0	196.0	98.0	212.0	106.0	60
66	50.1	25.0	98.2	49.1	128.0	64.2	182.0	90.7	237.0	119.0	257.0	128.0	66
72	59.6	29.8	117.0	58.4	153.0	76.3	216.0	108.0	282.0	141.0	305.0	153.0	72
78	69.9	35.0	137.0	68.6	179.0	90.0	254.0	127.0	331.0	166.0	358.0	179.0	78
84	81.1	40.5	159.0	79.5	208.0	104.0	294.0	147.0	384.0	192.0	416.0	208.0	84
90	93.1	46.5	183.0	91.3	239.0	119.0	337.0	169.0	441.0	221.0	477.0	239.0	90
96	106.0	53.0	208.0	104.0	272.0	136.0	384.0	192.0	502.0	251.0	543.0	272.0	96

GENERAL NOTES- FOR ALL THRUST BLOCKS

1. All Calculations Are Based On Internal Pressure Of 200 P.S.I. For 24" I.D. Pipe And Smaller And 150 P.S.I. On 30" I.D. And Larger.
2. Volumes Of Vertical Bend Thrust Blocks Are Net Volumes Of Concrete To Be Furnished. The Corresponding Weight Of The Concrete (Class F) Is Equal To Or Greater Than The Vertical Component Of Thrust On The Vertical Bend.
3. Wall Thickness (T) Assumed Here For Estimating Purposes Only.
4. Concrete For Blocking Shall Be Class B Concrete.
5. Dimensions May Be Varied As Required By Field Conditions Where And As Directed By The Engineer. The Volume Of Concrete Blocking Shall Not Be Less Than Shown Here.

VERTICAL BEND THRUST BLOCK

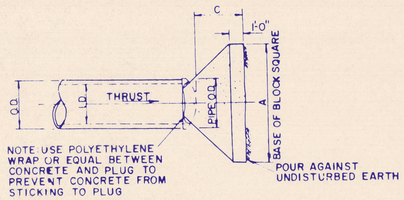

PLAN OF PLUG THRUST BLOCK

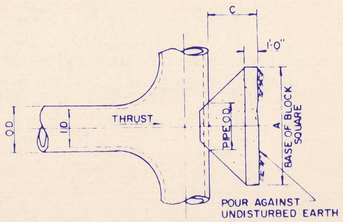

PLAN OF TEE THRUST BLOCK

I.D. (IN.)	THRUST TONS	C FT	EARTH A FT	EARTH VOL C.Y.	ROCK A FT.	ROCK VOL C.Y.
4,6,8	5.1	1.5	2.5	0.3	2.0	0.2
10,12	11.3	1.5	3.5	0.6	2.5	0.3
16,18	25.5	2.0	5.5	1.6	4.0	0.9
20	31.5	2.0	6.0	1.9	4.0	0.9
24	45.2	2.5	7.0	3.1	5.0	1.7
30	53.0	3.0	7.5	4.1	5.5	2.4
36	76.3	4.0	9.0	7.3	6.5	4.2
42	104.0	4.5	10.5	11.0	7.5	6.2
48	136.0	5.0	12.0	15.6	8.5	8.7
54	172.0	5.5	13.5	21.4	9.5	11.9
60	212.0	6.0	15.0	28.4	10.5	15.7
66	257.0	6.5	16.5	36.8	11.5	20.5
72	305.0	7.5	17.5	47.2	12.5	27.2
78	358.0	8.0	19.0	58.9	13.5	33.7
84	416.0	8.5	20.5	72.3	14.5	41.2
90	477.0	9.0	22.0	87.7	15.5	49.7
96	543.0	9.5	23.5	104.8	16.5	61.0

PLUG & TEE THRUST BLOCK

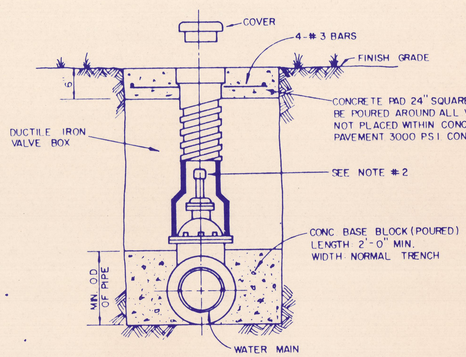

NOTE:

1. GATE VALVES SHALL BE IN ACCORDANCE WITH AWWA STANDARD C-509-80 OR LATEST THEREOF ALL VALVES SHALL BE "MUELLER" OR APPROVED EQUAL.
2. A PERMANENTLY ATTACHED VALVE EXTENSION STEM SHALL BE REQUIRED FOR ANY VALVE THATS OPERATING NUT IS LOCATED IN EXCESS OF 4 FEET BELOW THE TOP OF VALVE BOX. THIS EXTENSION SHALL BE OF SUFFICIENT LENGTH TO INSURE THAT ITS TOP IS WITHIN 4' OF VALVE BOX L.I.D. MANUFACTURED VALVE STACK DUCTILE IRON PIPE TO BE USED FOR EXTENSION GREATER THAN 4'-0. BELL END OF STACK TO BE FITTED OVER VALVE. VALVE AND VALVE STACK IS TO BE POLY WRAPED.
3. VALVES SHALL BE OF DUCTILE IRON W/RUBBER ENCAPSULATED DISK BODY BOLTS SHALL BE STAINLESS STEEL OF SAME SIZE ON EACH VALVE.

TYPICAL VALVE SETTING AND BOX

NOTE:

PROVIDE 1" MINIMIUM THICKNESS CONCRETE OR CEMENT MORTAR COATING IN THE FIELD FOR THE PROTECTION OF ALL EXPOSED STEEL SUCH AS FLANGES, CAULKED-JOINTS, THREADED OUTLETS, CLOSURES, ETC. THE CEMENT MORTAR USED SHALL CONSIST OF ONE PART PORTLAND CEMENT TO TWO AND ONE-HALF PARTS OF FINE, SHARP (PLASTER) SAND. WHERE SHOWN, COATING IS TO BE REINFORCED WITH WIRE MESH.

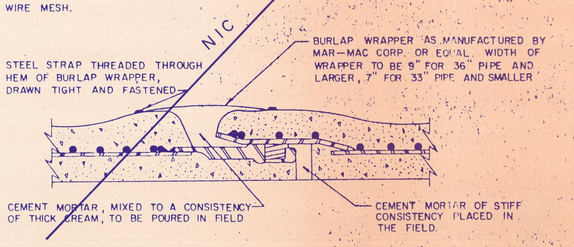

STANDARD RUBBER GASKET JOINT

NOTE: ALL CLOSURE SECTIONS SHALL BE FABRICATED WITH HAND HOLES TO ALLOW WIPING INSIDE OF JOINTS AFTER CLOSURE IS IN PLACE.

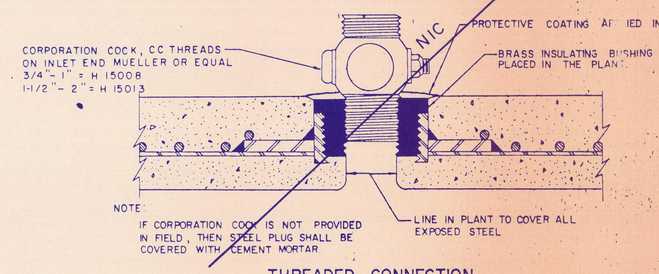

THREADED CONNECTION

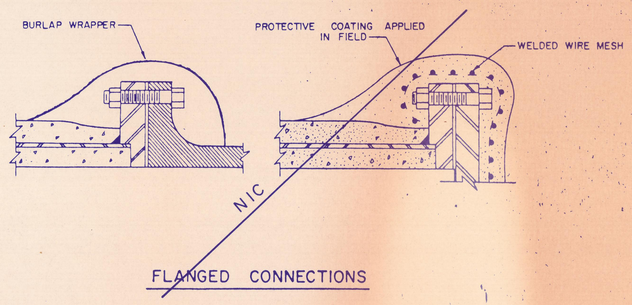

FLANGED CONNECTIONS

REINFORCED CONCRETE CYLINDER PIPE DETAILS

STATE OF TEXAS
CARL D. SCHAEFER
41838
REGISTERED PROFESSIONAL ENGINEER

6-4-93

TOWN OF ADDISON, TEXAS
DEPARTMENT OF ENGINEERING

STANDARD CONSTRUCTION DETAILS
WATER

THRUST BLOCKS

Designed -	Drawn -	Date -	SCD NO.
Approved -	Checked -	Scale -	Sheet SD 5A