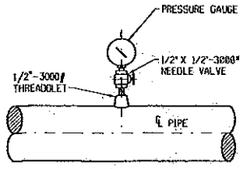

DETAIL 1
PRESSURE GAUGE
NOT TO SCALE

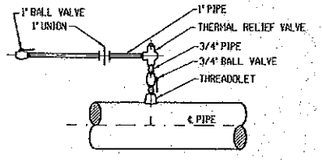

DETAIL 2
THERMAL RELIEF VALVE
NOT TO SCALE

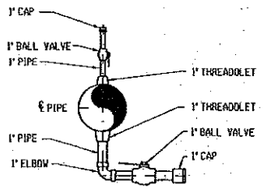

NOTE:
PROVIDE SIZE INDICATED IN DETAIL UNLESS SPECIFIED OTHERWISE ON PLANS.

DETAIL 3
VENT / DRAIN
NOT TO SCALE

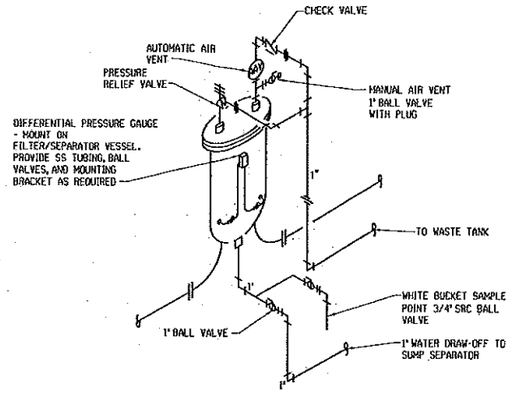

DETAIL 4
FILTER / SEPARATOR
NOT TO SCALE

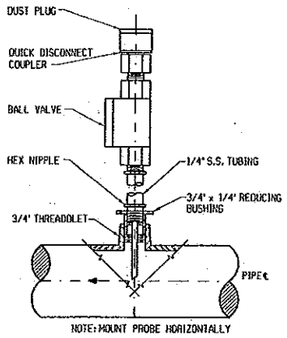

DETAIL 5
FUEL SAMPLING CONNECTION
NOT TO SCALE

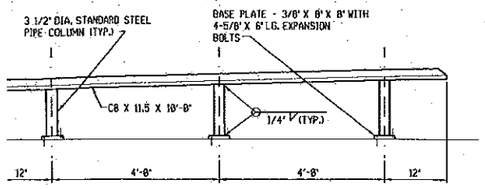

NOTES:
1. HEIGHT OF TROUGH TO BE DETERMINED BY FUEL PIPING & EQUIPMENT
2. SLOPE OF TROUGH TO BE 3" FROM ONE END TO THE OTHER (LOW END BEING THE NOZZLE OR QUICK CONNECTION END OF HOSE)

DETAIL 6
HOSE TROUGH DETAIL
NOT TO SCALE

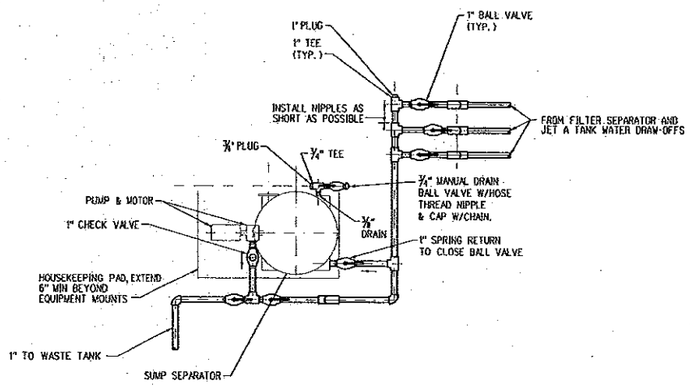

DETAIL 7
SUMP SEPARATOR
NOT TO SCALE.

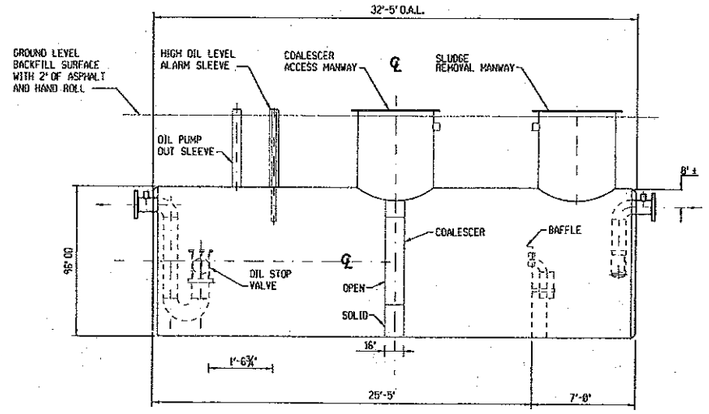

DETAIL 8
10,000 GALLON OIL WATER SEPARATOR
NOT TO SCALE

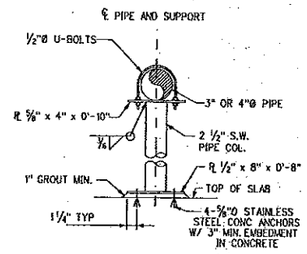

DETAIL 9
PIPE SUPPORT
NOT TO SCALE

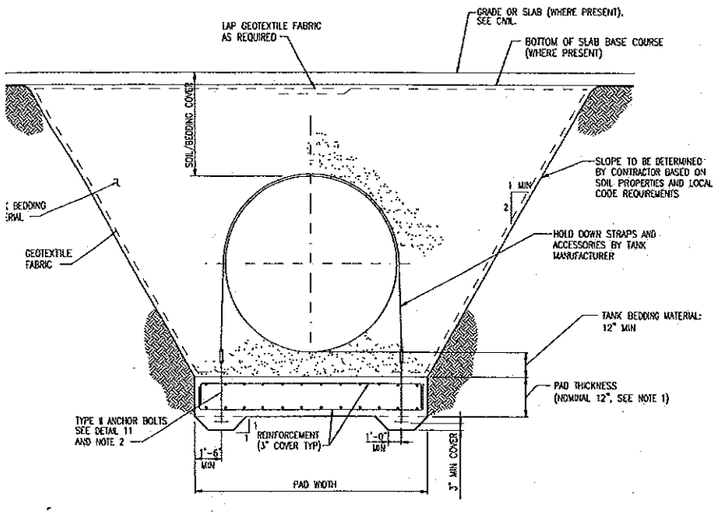

DETAIL 10
BURIED OIL WATER SEPARATOR OWS
NOT TO SCALE

NOTES:

1. COORDINATE FINAL SLAB SIZES WITH MANUFACTURERS RECOMMENDATION FOR THE TANK SUPPLIED. ADJUST LENGTH AND WIDTH OF PAD ACCORDINGLY WHILE MAINTAINING THE 1'-6" MINIMUM SLAB EXTENSIONS ON EACH SIDE OF THE TANK AND 1'-0" MINIMUM BEYOND EACH END.
2. ANCHOR BOLTS SHALL BE GALVANIZED. COORDINATE ANCHOR BOLT SIZES AND LOCATIONS WITH THE TANK SUPPLIER.
3. SEE CIVIL DRAWINGS FOR THE LOCATION AND ELEVATION OF OWS.
4. WATER LEVEL AROUND THE TANKS SHALL NOT EXCEED THE TANK CENTERLINE LEVEL AT ANY TIME DURING THE TANK INSTALLATION PHASE. CONTRACTOR SHALL UTILIZE PROPER DEWATERING METHODS TO CONTROL THE WATER LEVEL UNTIL COMPLETION OF THE BACKFILL PROCESS UP TO FINISH GRADE LEVEL.
5. THE TANK HOLD-DOWN SLAB SHALL BE DESIGNED TO PROVIDE RESISTANCE AGAINST BUOYANCY WITH A MINIMUM SAFETY FACTOR OF 1.50 FOR A FULLY BACKFILLED EMPTY TANK CONDITION WITH GROUNDWATER AT SURROUNDING GRADE LEVEL.
6. COORDINATE THE FINAL NUMBER AND LOCATIONS OF STRAPS WITH THE TANK SUPPLIER.

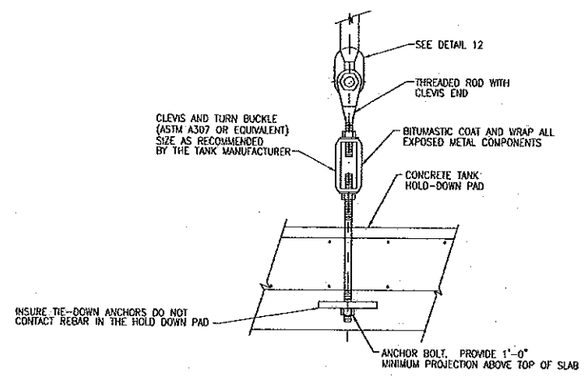

DETAIL 11
NOT TO SCALE

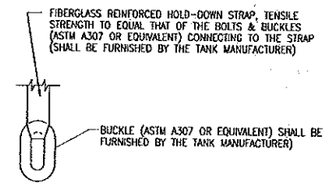

DETAIL 12
NOT TO SCALE

FM-3

DGN NA

STATE OF TEXAS
JOHN HOWARD BARNHILL
BL5178
REGISTERED PROFESSIONAL ENGINEER
4/16/05

REV.	DATE	DESCRIPTION	APP.
		ISSUED FOR BID STAGE OF PLANS	

ADD - FUEL
27514-000.002.20
DGN NA
CADD FILE NO.

Burns & McDonnell SINCE 1898

Washington Group International
Integrated Engineering, Construction and Management Solutions

ADDISON AIRPORT
ADDISON, TEXAS

BULK FUEL STORAGE AND DISPENSING SYSTEM
FUEL SYSTEM DETAILS

DESIGNER J.H.B. PROJ. LEAD J.H.B. APPROVED J.H.B.
CADD TECH. W.D.L. CHECKED R.A.P.

DATE: OCTOBER 25, 2004
SHEET 29 OF 33