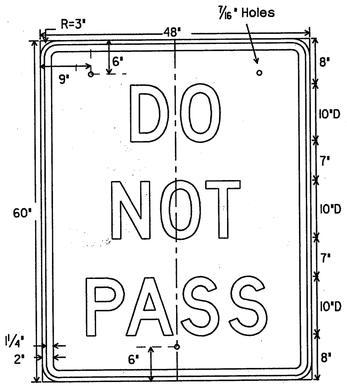

FR4-1
48" X 60"

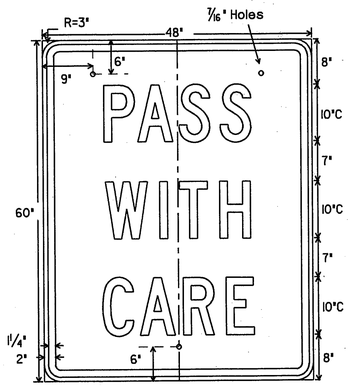

FR4-2
48" X 60"

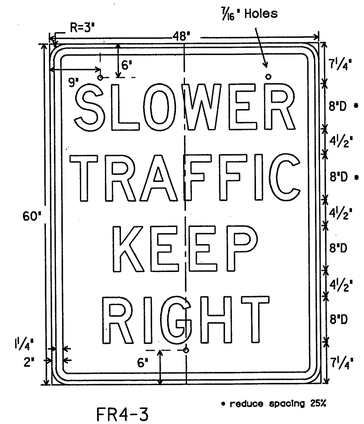

FR4-3
48" X 60"

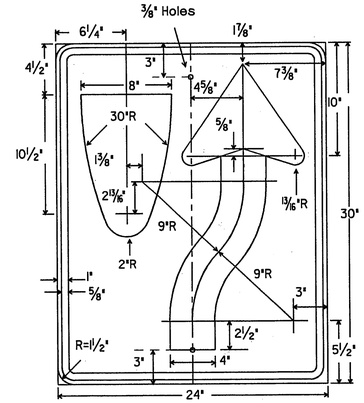

R4-7
24" X 30"

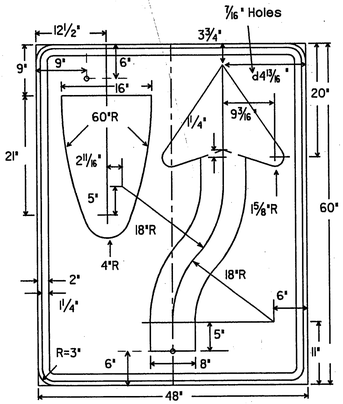

FR4-7
48" X 60"

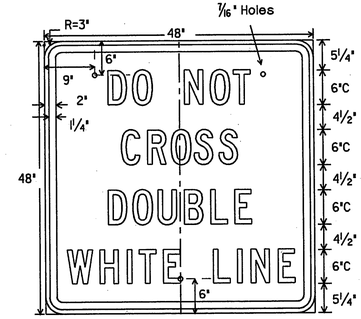

FR4-3B
48" X 48"

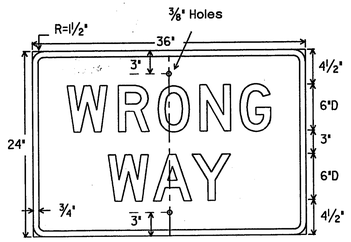

R5-1a
36" X 24"

Letters - White Reflective
Border - White Reflective
Background - Red Reflective

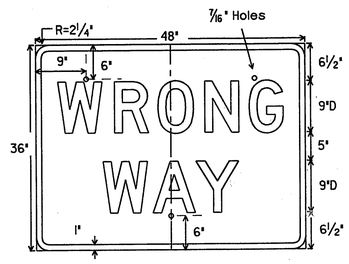

SR5-1a
48" X 36"

Letters - White Reflective
Border - White Reflective
Background - Red Reflective

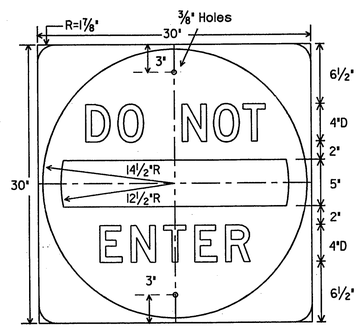

R5-1
30" X 30"

Letters - White Reflective
Bar - White Reflective
Background - Red Reflective

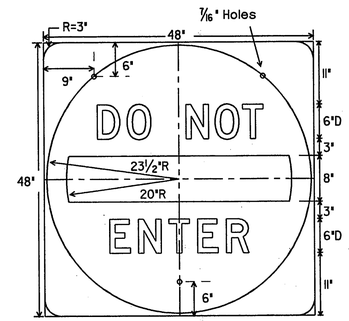

SR5-1
48" X 48"

Letters - White Reflective
Bar - White Reflective
Background - Red Reflective

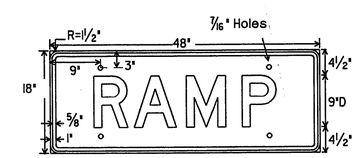

R5-1T
48" X 18"

Letters -Red Reflective
Border -Red Reflective
Background - White Reflective

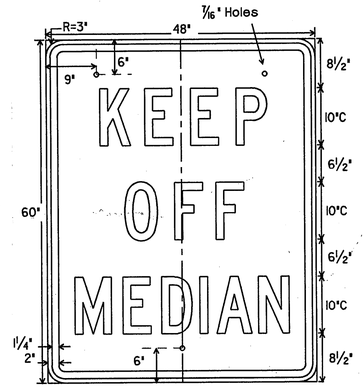

FR11-1
48" X 60"

SPECIFICATION REFERENCE TABLE	
MATERIALS AND TESTS DIVISION SPECIFICATIONS	
ALUMINUM SIGN BLANKS	D-9-7110 △
REFLECTIVE SHEETING, TYPE A (ENGINEER GRADE) (FOR BLACK AND WHITE SIGNS ON THIS SHEET)	D-9-8300
REFLECTIVE SHEETING, TYPE C (HIGH SPECIFIC INTENSITY) (FOR RED SERIES SIGNS ON THIS SHEET)	D-9-8300
VINYL NON-REFLECTIVE DECAL SHEETING	D-9-8320

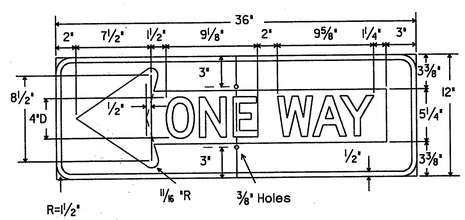

R6-1L
36" X 12"

Letters - Black
Symbol - White Reflective
Border - White Reflective
Background - Black

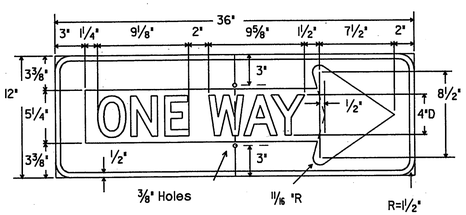

R6-1R
36" X 12"

Letters - Black
Symbol - White Reflective
Border - White Reflective
Background - Black

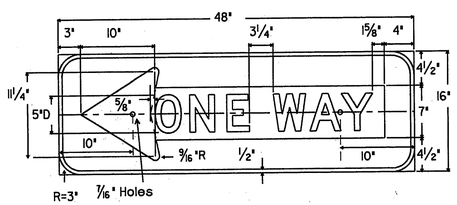

FR6-1L
48" X 16"

Letters - Black
Symbol - White Reflective
Border - White Reflective
Background - Black

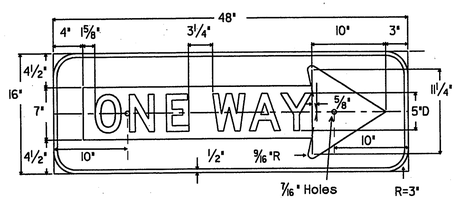

FR6-1R
48" X 16"

Letters - Black
Symbol - White Reflective
Border - White Reflective
Background - Black

GENERAL NOTES:

The alphabets and lateral spacing between letters and numerals shall conform with the Texas 'Manual on Uniform Traffic Control Devices for Streets and Highways', latest edition, and any approved changes thereto. Lateral spacing of text shall provide a balanced appearance. All materials shall conform to Department Specifications.

Legend (except where noted), shall be black and applied by screening process, cut-out vinyl non-reflective decal sheeting, and/or reflective sheeting or combination thereof. Legend on R5-1, ER5-1, SR5-1, R5-1T, R5-1a and SR5-1a shall be applied by reverse screening process with transparent colored ink or cut-out white reflective sheeting applied to colored background or combination thereof. Background shall be reflective sheeting.

Sign blanks shall be one piece 0.080 inch thick sheet aluminum alloy (Type A), unless △ otherwise noted elsewhere in the plans.

ISSUE DATE: 11-26-96

FINAL RECORD DRAWING
Date: 12/25/99

STATE OF TEXAS
GLENN D. HOUSER
24236
REGISTERED PROFESSIONAL ENGINEER

Glenn D. Houser
4-14-97

STANDARD PLANS
TEXAS DEPARTMENT OF TRANSPORTATION
Traffic Operations Division

REGULATORY SIGNS

R(2)- 95 (MOD.)

ORIG DRAW DATE: FEB. 1976	DN:- LR	CK:-	DW:- DN	CK:-	NEG NO.:
REVISIONS	STATE DISTRICT	FEDERAL REGION	FEDERAL AID PROJECT		SHEET
1-85		6			38
7-90	COUNTY		CONTROL	SECTION	JOB	HIGHWAY
8-95					
11-96△					

7B

DN:LR
CK:CW
DW:DN
CK:MT

DATE:
ACC: d58hplc/usr/d580504
FILE:

LEVELS DISPLAYED