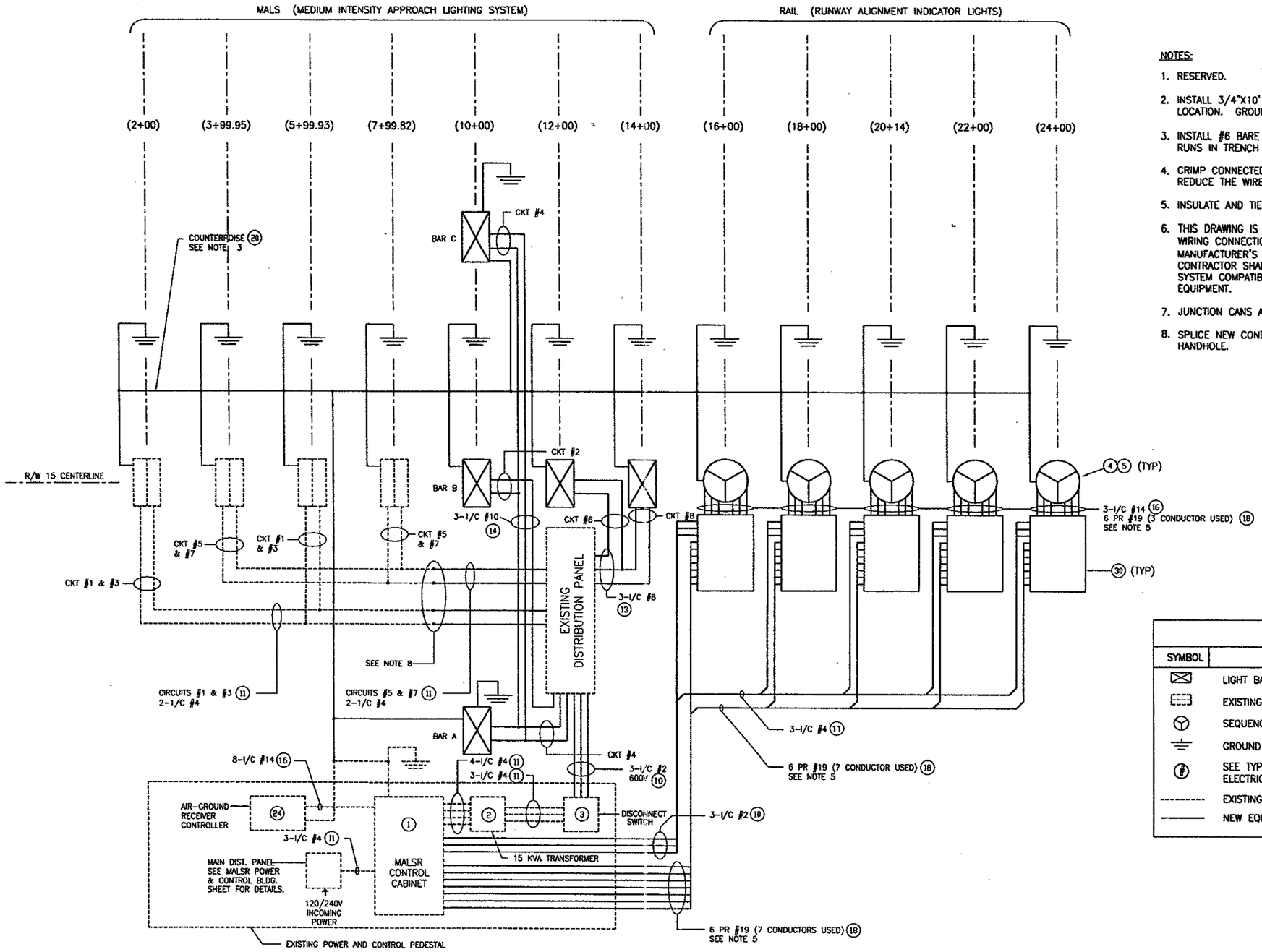

MALSR ELECTRICAL SYSTEM LAYOUT

NOT TO SCALE

NOTES:

1. RESERVED.
2. INSTALL 3/4"X10' CU CLAD GROUND ROD AT EACH EQUIPMENT LOCATION. GROUND ALL EQUIPMENT & STRUCTURES.
3. INSTALL #6 BARE COPPER COUNTERPOISE WIRE ABOVE ALL CABLE RUNS IN TRENCH AS SHOWN ON VARIOUS DRAWINGS.
4. CRIMP CONNECTED PIGTAILS MAY BE USED IN BREAKER PANEL TO REDUCE THE WIRE SIZE ACCEPTABLE TO THE CIRCUIT BREAKERS.
5. INSULATE AND TIE BACK UNUSED CONDUCTORS.
6. THIS DRAWING IS TO BE USED FOR INFORMATION ONLY. ACTUAL WIRING CONNECTIONS ARE TO BE IN ACCORDANCE WITH MANUFACTURER'S INSTRUCTIONS SUPPLIED WITH EQUIPMENT. CONTRACTOR SHALL PROVIDE A COMPLETE AND OPERATIONAL SYSTEM COMPATIBLE WITH EXISTING POWER AND CONTROL PEDESTAL EQUIPMENT.
7. JUNCTION CANS ARE TO HAVE STEEL COVERS AND GASKETS.
8. SPLICE NEW CONDUCTORS TO EXISTING CONDUCTORS IN EXISTING HANDHOLE.

LEGEND

SYMBOL	DESCRIPTION
⊠	LIGHT BAR, PAR-38 150W SPOT, FIVE FIXTURES
⊟	EXISTING SEMIFLUSH LIGHT BAR
Ⓨ	SEQUENCED FLASHERS
⏚	GROUND ROD, SEE NOTE 2
(#)	SEE TYPICAL QUANTITIES DETAIL ON MALSR ELECTRICAL DETAILS SHEET 2 OF 2
- - - -	EXISTING EQUIPMENT/WIRE
———	NEW EQUIPMENT/WIRE

DATE	REVISIONS	BY	AUTH

TxDOT NO.
BID NO.
URSG NO. E701044.00
DESIGN
DRAWN
CHECKED
SCALE:

PRELIMINARY
NOT FOR CONSTRUCTION, BIDDING, OR PERMIT PURPOSES. FOR REVIEW ONLY.
AVIATION ALLIANCE, INC.
M. B. SHAO, P.E.
REGISTRATION NO. 82776
DATE: 2/9/01
APPROVED

ADDISON AIRPORT

AVIATION ALLIANCE, INC.
Consulting Engineers
COLLEYVILLE, TEXAS
817-498-3300

URS Greiner Woodward Clyde
4100 Amon Carter Boulevard, Suite 108
Fort Worth, TX 76155
www.urscorp.com

PROJECT NAME
RUNWAY 15 ESA GRADING

DRAWING TITLE
MALSR ELECTRICAL DETAILS - SHEET 1 OF 2

DRAWING NO.
E15

DATE: 2/9/01