MALS MODIFICATION SCHEDULE

EXISTING STATION	PROPOSED STATION	ITEM	EXISTING LIGHT ELEV.	PROPOSED LIGHT ELEV.	PROPOSED ANGLE	STRUCTURE TYPE EXISTING	STRUCTURE TYPE PROPOSED	ALTERATIONS
2+00	2+00	MALS	634.11	634.11	N/A	SEMIFLUSH	SEMIFLUSH	NONE
3+99.95	3+99.95	MALS	634.88	634.88	N/A	SEMIFLUSH	SEMIFLUSH	NONE
5+99.93	5+99.93	MALS	635.72	635.72	N/A	SEMIFLUSH	SEMIFLUSH	NONE
7+99.82	7+99.82	MALS	636.37	636.37	N/A	SEMIFLUSH	SEMIFLUSH	NONE
9+99.92	10+00	MALS	637.72	640.37	3.4°	EMT	EMT	NEW FOUNDATIONS, FRANGIBLE COUPLINGS, EMT LAMPHOLERS, WIRE, AND LAMPS
11+99.59	12+00	MALS	643.00	644.37	3.5°	MG-20	MG-20	NEW FOUNDATIONS, FIBERGLASS LIR STRUCTURE, LAMP HOLDERS, WIRE, AND LAMPS
13+99.83	14+00	MALS	650.00	648.37	3.5°	MG-20	MG-20	NEW FOUNDATIONS, FIBERGLASS LIR STRUCTURE, LAMP HOLDERS, WIRE, AND LAMPS
15+99.92	16+00	RAIL	655.85	652.37	6.0°	MG-30	MG-20	NEW FOUNDATIONS, FIBERGLASS LIR STRUCTURE, JUNCTION BOX, RAIL CONTROL CABINET, FLASHER HEAD ASSEMBLY, WIRE, AND FLASH TUBE
17+99.95	18+00	RAIL	662.00	656.37	6.0°	MG-30	MG-20	NEW FOUNDATIONS, FIBERGLASS LIR STRUCTURE, JUNCTION BOX, RAIL CONTROL CABINET, FLASHER HEAD ASSEMBLY, WIRE, AND FLASH TUBE
19+99.85	20+14	RAIL	667.95	660.65	6.0°	MG-30	MG-20	NEW FOUNDATIONS, FIBERGLASS LIR STRUCTURE, JUNCTION BOX, RAIL CONTROL CABINET, FLASHER HEAD ASSEMBLY, WIRE, AND FLASH TUBE
21+99.92	22+00	RAIL	674.00	664.37	6.0°	MG-40	MG-30	NEW FOUNDATIONS, FIBERGLASS LIR STRUCTURE, JUNCTION BOX, RAIL CONTROL CABINET, FLASHER HEAD ASSEMBLY, WIRE, AND FLASH TUBE
23+99.90	24+00	RAIL	674.00	668.37	6.0°	MG-30	MG-30	NEW FOUNDATIONS, FIBERGLASS LIR STRUCTURE, JUNCTION BOX, RAIL CONTROL CABINET, FLASHER HEAD ASSEMBLY, WIRE, AND FLASH TUBE

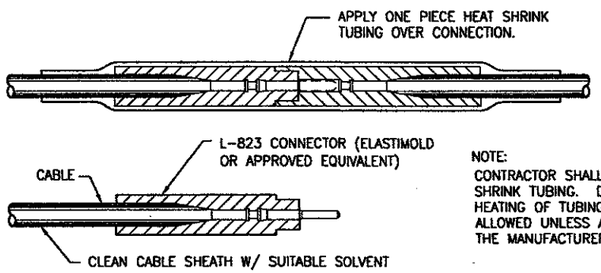

NOTE:
CONTRACTOR SHALL USE HEAT SHRINK TUBING. DIRECT FLAME HEATING OF TUBING WILL NOT BE ALLOWED UNLESS APPROVED BY THE MANUFACTURER.

PLUG CONNECTED TO CABLE

1/E3 SERIES CIRCUIT CONNECTOR DETAIL
NOT TO SCALE

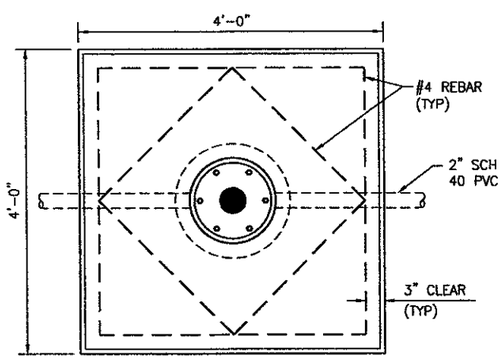

PLAN

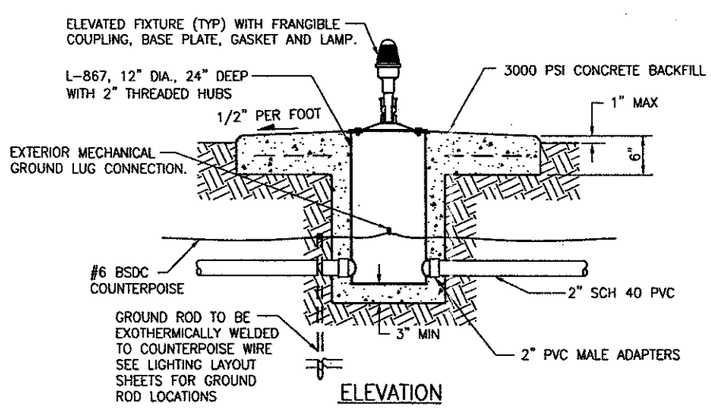

ELEVATION

NOTES:
1. CONTRACTOR SHALL CONNECT LIGHTS IN SERIES WITH EXISTING RUNWAY EDGE LIGHT CIRCUIT USING #8 L-824C 5KV CABLE WITH L-823 CONNECTORS.
2. LEAVE APPROXIMATELY 6' OF EACH CABLE COILED IN EACH CAN SO THAT EACH CABLE MAY BE RAISED A MINIMUM OF 2' ABOVE THE TOP OF THE CAN.

2/E3 RUNWAY 33 END LIGHT
NOT TO SCALE

DEMOLITION NOTES:

1. EXISTING TAXIWAY AND RUNWAY LIGHTING CIRCUITS MUST REMAIN IN SERVICE DURING ALL HOURS OF DARKNESS AND DURING INSTRUMENT METEOROLOGICAL CONDITIONS (BELOW 1000' OF CEILING OR 3 MILES VISIBILITY AS DEFINED BY FAA STANDARDS).
2. PAVEMENT AREAS MAY BE CLOSED TO AIRCRAFT TRAFFIC WHEN PRIOR APPROVAL HAS BEEN COORDINATED THROUGH RESIDENT PROJECT REPRESENTATIVE (RPR).
3. AFTER REMOVAL OF THE DESIGNATED AIRFIELD LIGHTS, THE CONTRACTOR SHALL RE-ESTABLISH THE SERIES CIRCUIT IN ORDER TO MEET THE REQUIREMENT OF NOTE 1. TEMPORARY JUMPER WIRES (L824C 5KV CABLE) SHALL BE APPROVED AS NECESSARY TO ROUTE THE CIRCUIT CLEAR OF THE CONSTRUCTION ACTIVITY.
4. TEMPORARY JUMPER WIRES SHALL NOT BE REUSED AS NEW CABLE FOR LIGHTING CIRCUITS. ABANDONED WIRES MAY BE REUSED FOR TEMPORARY JUMPERS PROVIDED THEY ARE IN SATISFACTORY CONDITION TO MEET THE REQUIREMENTS OF SAFETY CODES AND NOTE 1 ABOVE.
5. TEMPORARY JUMPERS SHALL BE PROTECTED FROM MOWERS AND VEHICULAR TRAFFIC BY A MEANS SUITABLE FOR THE SITUATION TO ASSURE SAFETY. DIRT COVER, SAND BAGS, CONDUIT OR OTHER MEANS OF PROTECTION MAY BE NECESSARY AND ARE SUBJECT TO PRIOR APPROVAL BY RPR.
6. CONTRACTOR SHALL FIELD VERIFY EXISTING CONDUIT, DUCT, AND CIRCUIT CONFIGURATION. INFORMATION SHOWN IS BASED ON DATA AVAILABLE AT TIME OF DESIGN AND MAY NOT REFLECT ACTUAL EXISTING CONDITIONS.

MALSR NOTES:

1. EXISTING MALSR IS A COMBINATION OF AN ORIGINAL GTE SILVANIA SYSTEM THAT HAS BEEN UPDATED WITH MULTI-ELECTRIC SOLID STATE TIMER AND GODFRY FLASH HEADS. CONTRACTOR SHALL VERIFY THAT THE NEW RAIL INDIVIDUAL CONTROL CABINETS AND FLASHER HEAD ASSEMBLIES ARE COMPATIBLE WITH THE EXISTING MALSR CONTROL EQUIPMENT.

2. CONTRACTOR SHALL PERFORM THE FOLLOWING MALSR WORK:
   A. REMOVE EXISTING MALS FROM STATION 9+99.92 THRU STATION 13+99.83 INCLUDING FOUNDATIONS AND MALS DISTRIBUTION PANEL.
   B. REMOVE EXISTING RAIL FROM STATION 15+99.92 THRU STATION 23+99.90 INCLUDING FOUNDATIONS, JUNCTION BOXES, AND INDIVIDUAL CONTROL CABINETS.
   C. BETWEEN STATION 9+99.92 AND STATION 23+99.90, CUT OFF EXISTING MALSR DIRECT EARTH BURIED (DEB) CABLES A MINIMUM OF 12 INCHES BELOW EXISTING GRADE AND ABANDON IN PLACE.
   D. FURNISH AND INSTALL MALS STATION 10+00, INCLUDING NEW EMT, FRANGIBLE COUPLINGS, LIGHT BASES, CONCRETE FOUNDATIONS, CONDUIT, WIRING, LIGHT ASSEMBLY, LAMPS, AND INCIDENTALS.
   E. FURNISH AND INSTALL MALS STATIONS 12+00 AND 14+00 INCLUDING NEW LIR MG-20, CONCRETE FOUNDATIONS, CONDUIT WIRING, LIGHT ASSEMBLY LAMPS, AND INCIDENTALS.
   F. FURNISH AND INSTALL RAIL STATIONS 16+00, 18+00, AND 20+14 INCLUDING NEW LIR MG-20, CONCRETE FOUNDATIONS, CONDUIT WIRING, JUNCTION BOX, CONTROL CABINET, FLASHER HEAD ASSEMBLY, FLASH TUBE, AND INCIDENTALS.
   G. FURNISH AND INSTALL RAIL STATIONS 22+00 AND 24+00 INCLUDING NEW LIR MG-20, CONCRETE FOUNDATIONS, CONDUIT WIRING, JUNCTION BOX, CONTROL CABINET, FLASHER HEAD ASSEMBLY, FLASH TUBE, AND INCIDENTALS.
   H. FURNISH AND INSTALL NEW POWER & CONTROL CABLES FOR MALSR SYSTEM FROM THE EXISTING MALSR POWER AND CONTROL PEDESTAL TO STATIONS 10+00 THRU 24+00 INCLUDING TRENCH & BACKFILL, CONDUIT JUNCTION CAN, JUNCTION CAN PLAZA, COUNTERPOISE, GROUND RODS, AND INCIDENTALS.
   I. FURNISH AND INSTALL NEW MALS POWER DISTRIBUTION PANEL INCLUDING FOUNDATION AND INCIDENTALS.

3. SEE SHEETS E1 AND E2 FOR PLAN & PROFILE INFORMATION. SEE SHEETS E4 THROUGH E7 FOR MALSR LAYOUT DETAILS.

4. ESTABLISH AGGREGATE WALKWAYS. REPAIR EXISTING GRAVEL ROADWAY FROM END OF NEW ASPHALTIC CONCRETE ROAD OUTWARD TO MIDDLE MARKER.

5. NOTWITHSTANDING THE EXISTING GROUND PROFILE SHOWN, MALS STATION TOP OF FOUNDATIONS OUTSIDE THE BLAST PAD SHALL BE 1-INCH MINIMUM, 2-INCHES MAXIMUM ABOVE FINISHED GRADE WITHIN THE RUNWAY SAFETY AREA (THROUGH MALSR STATION 19+16). GRADING SHALL BE ACCOMPLISHED ACCORDINGLY AND SHALL MEET SAFETY AREA CRITERIA FOR SLOPE AND SMOOTHNESS. SEE GRADING DRAWINGS.

6. ALL ELEVATIONS AND STATIONS ARE LOCATED RELATIVE TO THE APPROACH END OF RUNWAY 15 PAVEMENT.

7. ALL LIR'S SHALL BE FAA APPROVED FIBERGLASS STRUCTURES MEETING SPECIFICATION FAA-E-2702.

R/W 33 END LIGHT NOTES:

1. CONTRACTOR SHALL REMOVE, STORE, & REINSTALL R/W 33 END LIGHT FIXTURES AND ISOLATION TRANSFORMERS (8 TOTAL).
2. EXISTING R/W 33 END LIGHT BASES AND CONCRETE ENCASEMENTS SHALL BE REMOVED (8 TOTAL).
3. CONTRACTOR SHALL FURNISH AND INSTALL NEW R/W 33 END LIGHT BASES AT LOCATIONS SHOWN ON SHEET E4 (8 TOTAL).
4. CONTRACTOR SHALL PROVIDE NEW FANGIBLE COUPLINGS.

R/W 15 DISPLACED THRESHOLD LIGHT NOTES:

1. PROVIDE NEW LENSES FOR THE DISPLACED THRESHOLD LIGHTS. COLORS ARE SHOWN ON SHEET E2.

REVISIONS	DATE	BY	AUTH.

TxDOT NO. ____
BID NO. E701044.00
URS6 NO. ____
DESIGN ____
DRAWN ____
CHECKED ____
SCALE: ____

PRELIMINARY
NOT FOR CONSTRUCTION, BIDDING, OR PERMIT PURPOSES.
AVIATION ALLIANCE, INC.
8.8.8 BOND, TX
DATE: 2/9/01
APPROVED

ADDISON AIRPORT

URS Greiner Woodward Clyde
4100 Amon Carter Boulevard, Suite 108
Fort Worth, TX 76155
www.urscorp.com

AVIATION ALLIANCE, INC.
Consulting Engineers
GRAPEVINE, TEXAS
817-748-3300

PROJECT NAME: RUNWAY 15 ESA GRADING

DRAWING TITLE: R/W 15 MALSR MODIFICATION NOTES

DRAWING NO. E3

DATE: 2/9/01