COPYRIGHT © URS Greiner Woodward Clyde Inc., 2000 ALL RIGHTS RESERVED

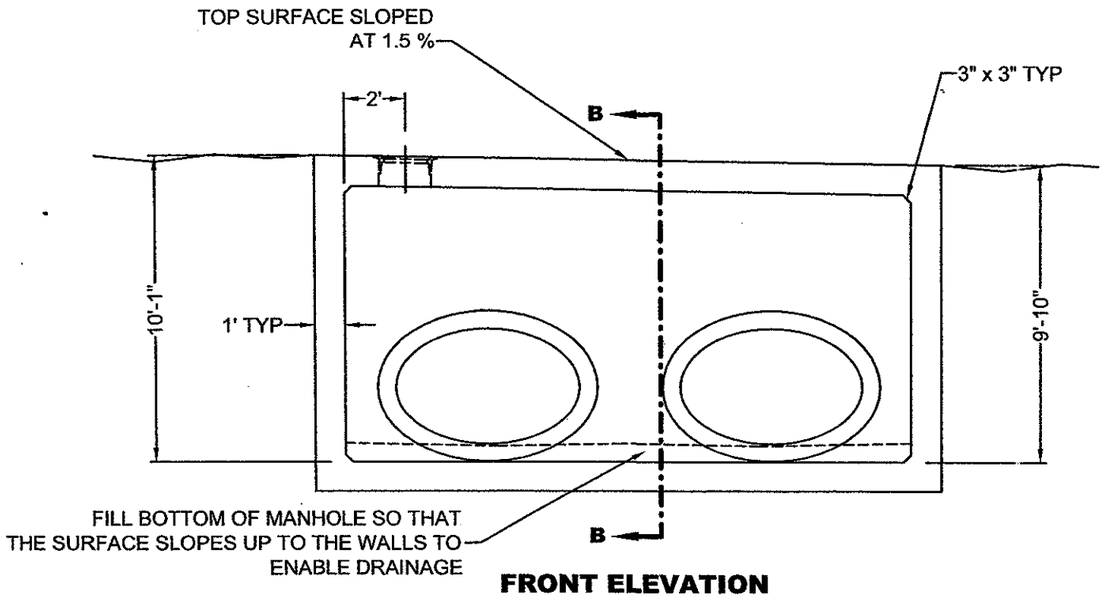

FRONT ELEVATION

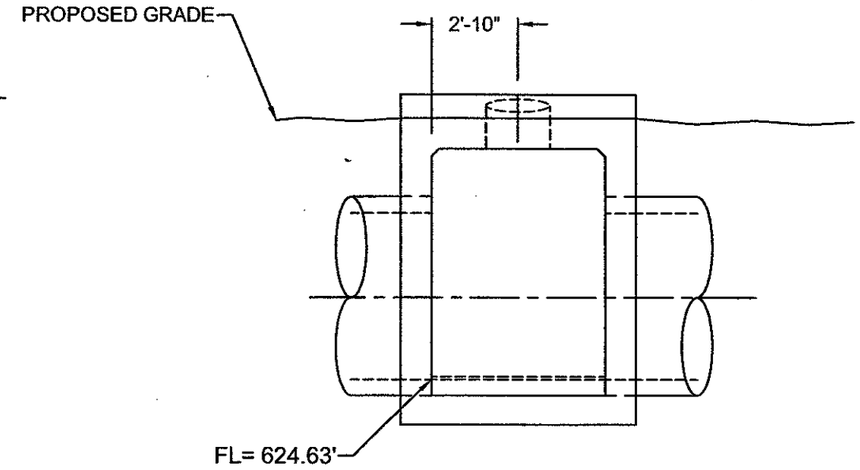

SIDE ELEVATION

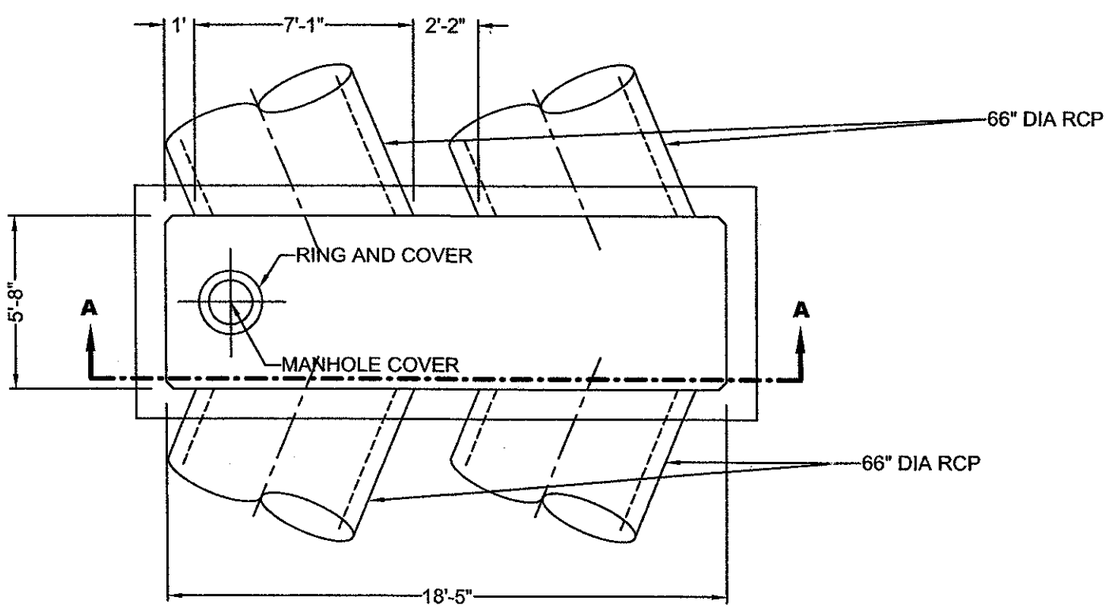

PLAN - STA. 9+75

PLAN **FRONT ELEVATION**

MANHOLE STEP DETAIL

N.T.S.

REVISIONS	DATE	BY	AUTH

TxDOT NO. _____
BID NO. _____
URSG NO. E701075.00
DESIGN K.H.
DRAWN K.H.
CHECKED T.S.
SCALE: AS SHOWN

ADDISON AIRPORT

URS Greiner Woodward Clyde
4100 Airport Carter Boulevard, Suite 108
Fort Worth, TX 76155
www.urscorp.com

PROJECT NAME: RUNWAY 15 ESA GRADING

DRAWING TITLE: MANHOLE No. 2 DETAIL

DRAWING NO. S1.2

DATE: 12/8/00

XREF: XREF:

E701075/CADD/STANDARDS