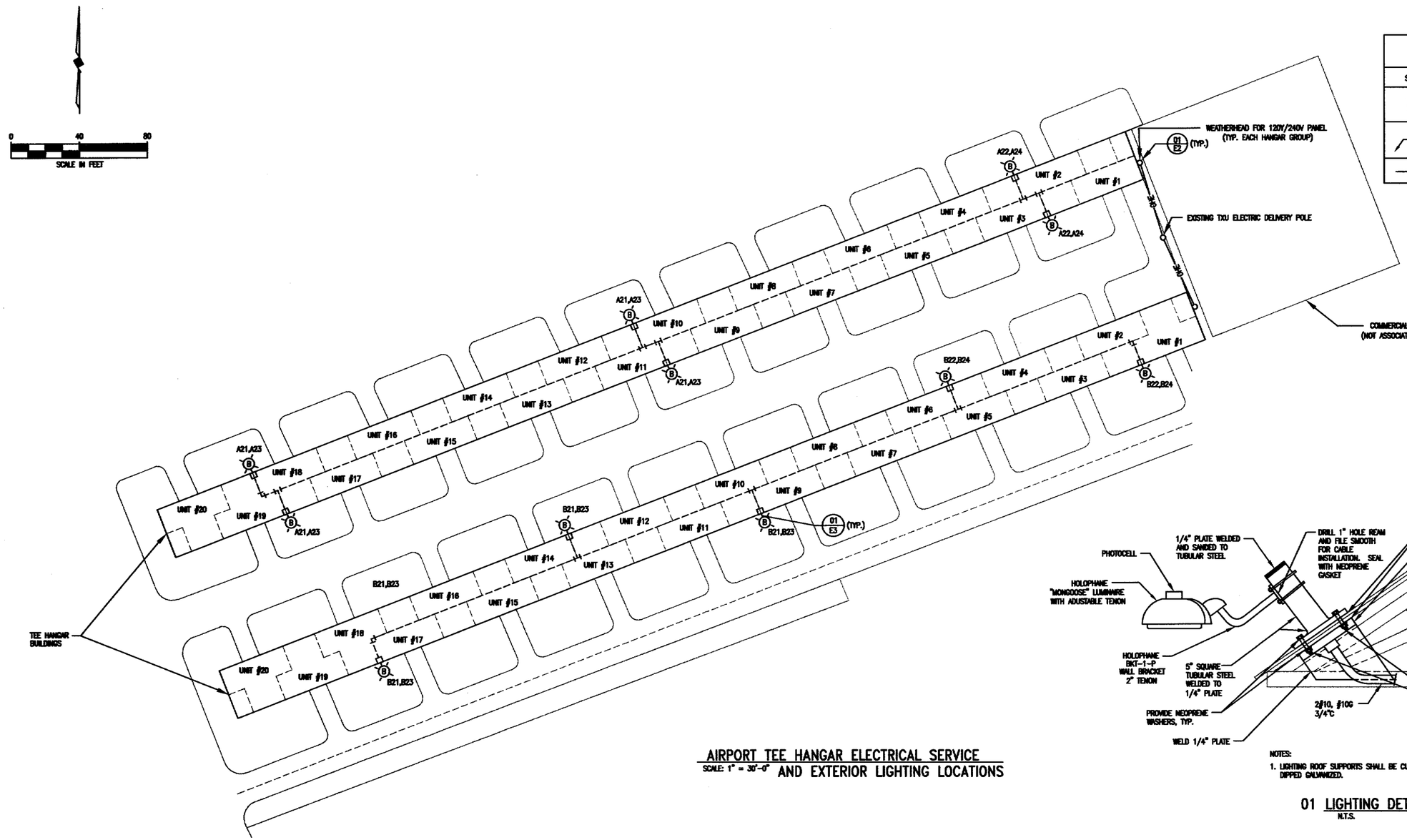

AIRPORT TEE HANGAR ELECTRICAL SERVICE
SCALE: 1" = 30'-0" AND EXTERIOR LIGHTING LOCATIONS

LIGHTING LEGEND

SYMBOLS	DESCRIBTION
B XX	CUT OFF HID FIXTURE LETTER IN FIXTURE DENOTES TYPE XX= PANEL, CKT. #
XX EX	REFERENCE DETAIL SYMBOL XX = DETAIL NUMBER EX = ELECTRICAL SHEET NUMBER
—OHE—	OVERHEAD ELECTRIC DISTRIBUTION

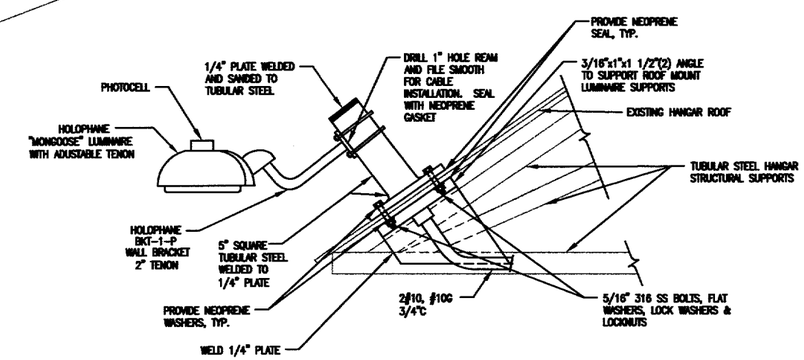

NOTES:
1. LIGHTING ROOF SUPPORTS SHALL BE CUSTOM FABRICATED AND HOT DIPPED GALVANIZED.

01 LIGHTING DETAIL
N.T.S.

VERIFY SCALE
Bar is one inch on original drawing.
0 1
If not one inch on this sheet, adjust scale accordingly.
FILE No. 01.043

THESE DOCUMENTS ARE FOR BIDDING, CONSTRUCTION, AND PERMIT PURPOSES.
DATE: 1-12-05

STATE OF TEXAS
JOSEPH A. KOTRLA
86361
REGISTERED PROFESSIONAL ENGINEER

TOWN OF ADDISON, TEXAS

ADDISON AIRPORT TEE HANGAR LIGHTING
HANGAR ROOF LIGHTING PLAN

McCREARY & ASSOCIATES, INC.
CONSULTING ENGINEERS 972/490-9745
6300 LBJ FREEWAY SUITE 227 DALLAS, TEXAS 75240

DESIGNED BY: W.H.G.	PROJECT: 97 180	SHEET NO. E3
DRAWN BY: M.E.G.	DATE: JANUARY, 2005	OF E7 SHEETS