DWG No. AS9-0023

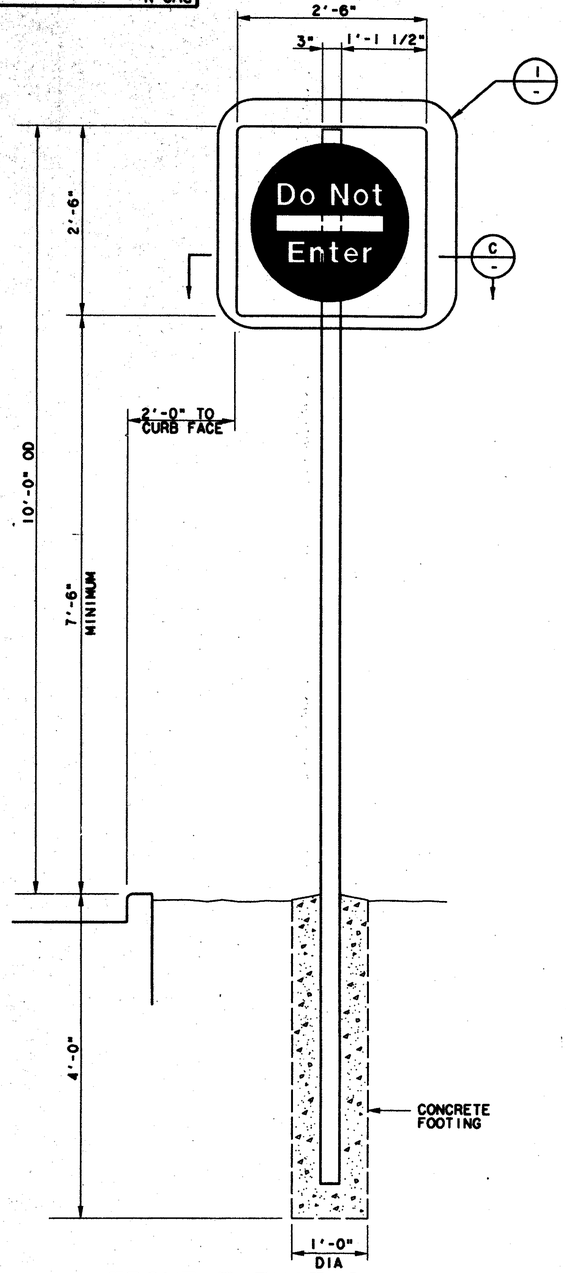

FRONT ELEVATION
LANDSCAPED CONDITION (A)
SCALE: 1"=1'-0"

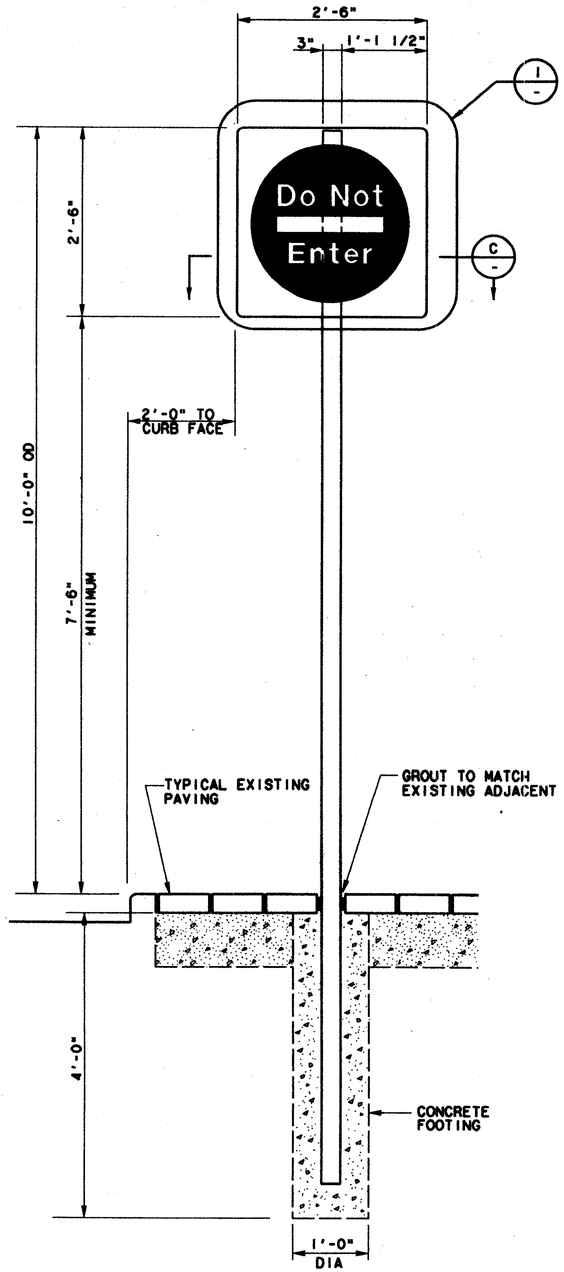

FRONT ELEVATION
PLATFORM CONDITION (B)
SCALE: 1"=1'-0"

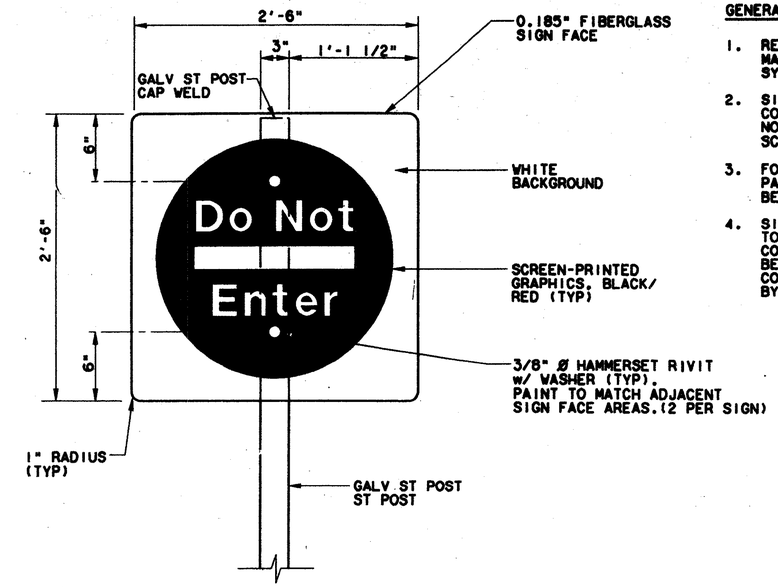

TYPICAL FACE DETAIL (1)
SCALE: 1 1/2"=1'-0"

GENERAL NOTES

1. REFER TO DART SIGN STANDARDS MANUAL FOR CORRECT FONTS, SYMBOLS AND REPRODUCTION ART.
2. SIGNS 3.10-3.56 ARE SINGLE FACE CONFIGURATION UNLESS OTHERWISE NOTED ON SITE-SPECIFIC SIGN SCHEDULES.
3. FOR SINGLE FACE CONFIGURATIONS PAINT BACK SIDE OF SIGN FACE TO BE WHITE.
4. SIGN POST, CAP AND FACE BRACKET TO BE UNFINISHED FOR LANDSCAPED CONDITIONS. PAINT GRAY TO MATCH BENJAMIN MOORE 1600 FOR PLATFORM CONDITIONS USING GALVITE PRIMER BY SHERWIN WILLIAMS OR EQUAL.

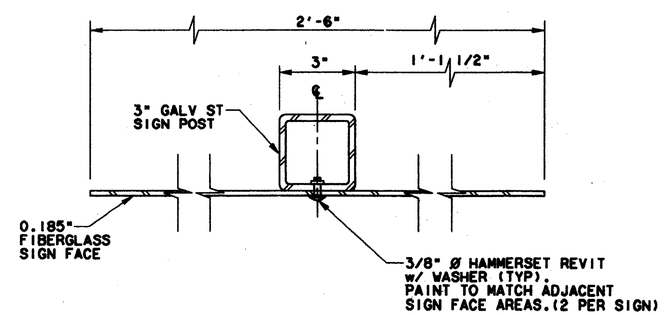

SECTION (C)
SCALE: HALF SCALE

Record (As-built) Certification

This is to certify that submission, we certify that a conformance to the contract requirements on the contract in all respects, except as otherwise noted.

Contract Number: 97000136
Company Name: AALCO
Other Information Submitted:
Signature: Tom Kasper
Printed or Typed Name: Tom Kasper
Title of Officer (Texas Resident): PRESIDENT

Seal of Professional Engineer of Construction Contractor, including the [illegible] for the Build Division for contracting [illegible]

7-7-94

CONFORMED

CONTRACT SHEET No. 28A of 95

REV	DATE	DESCRIPTION	BY	ENG	CHK	APP
1	6-25-93	ENTIRE SHEET REVISED				
2	1-25-94	ENTIRE SHEET REVISED	GS	DS	AZ	
3	7-7-95	ENTIRE SHEET REVISED	WMH	DS	AZ	

REV	DATE	DESCRIPTION	BY	ENG	CHK	APP

STATE OF TEXAS — JOHN ANTHONY SOSEBEE — 590 — REGISTERED PROFESSIONAL ENGINEER — 18 July 1995

ILIUM
ILIUM ASSOCIATES, INC.
500 108th Avenue NE
Suite 2450
Bellview, WA 98004

HUITT-ZOLLARS
3131 MCKINNEY AVENUE/SUITE 600
DALLAS, TEXAS/214-871-3311
Sverdrup Corporation
Barton-Aschman Associates, Inc.
Arredondo, Brunz & Associates, Inc.
Hellmuth Obata & Kassabaum, Inc.

DART PROJECT

SCALE	AS NOTED
DRAWN	G. SCOLARO
DESIGNED	A. ZREET
CHECKED	L. BERNAUER
IN CHARGE	D. KELLY
DATE	16 FEB 93

CAES

SIGNAGE STANDARDS

SIGN TYPES S3.10 - S3.23
TRAFFIC CONTROL SIGNS
ELEVATIONS, DETAILS, SECTIONS

CONTRACT	DWG No.	REV
C-97000136	AS9-0023	3

J:\PLOTTING\400M\DNCTSG33.PRF
bcolvin
LGDART.TBL
no ref levels, *no ref logical*, *no ref name*