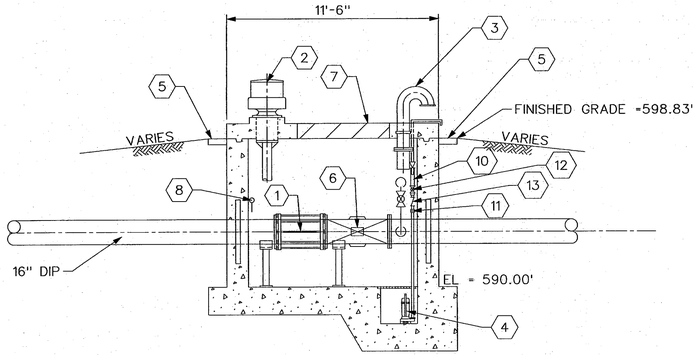

FLOW CONTROL VALVE VAULT ELEVATION VIEW
1/4" = 1'-0"

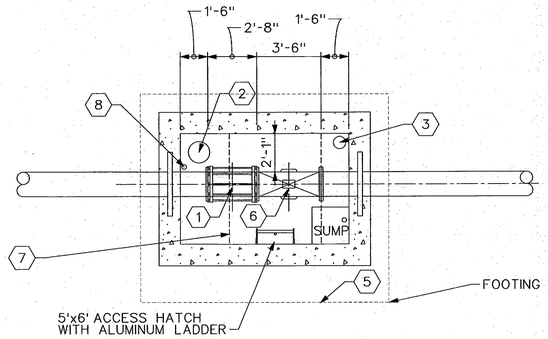

FLOW CONTROL VALVE VAULT SECTIONAL PIPING PLAN
1/4" = 1'-0"

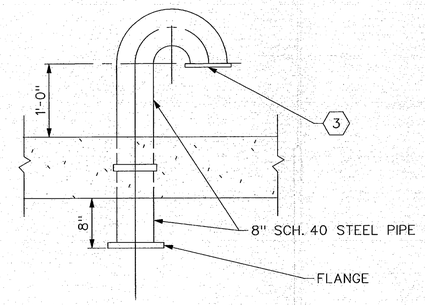

8" AIR INTAKE PIPE/BUG SCREEN
1" = 1'-0"

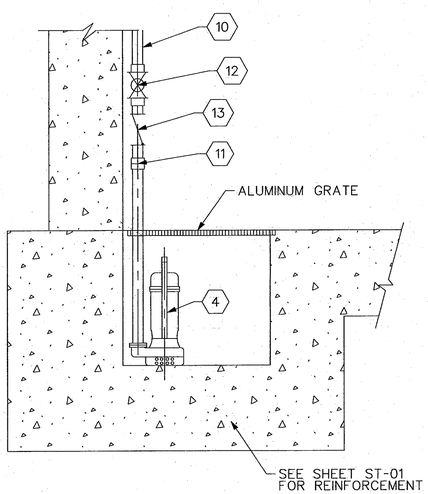

SUMP DETAIL
NOT TO SCALE

NOTES BY SYMBOL "⬡"

1. ROMAC RESTRAINED FLANGED COUPLING ADAPTER & 32"-16" DIA. FLANGED BY PLAIN END.
2. MOTORIZED VENT (EF-7).
3. 8" AIR INTAKE PIPE/ 16- MESH STAINLESS STEEL BUG SCREEN.
4. SUBMERSIBLE PUMP, PER SPECIFICATIONS.
5. 1' WIDE CONCRETE SIDEWALK.
6. 16" CONTROL VALVE SEE CONTROL VALVE SUB-NOTE BELOW.
7. 5'X6' BILCO HATCH, TYPE J-AL, ALUMINUM WITH STAINLESS STEEL HARDWARE, RATED FOR 300 PSF PEDESTRIAN LOAD, WITH DRAIN AND PVC DRAIN PIPE ROUTED TO SUMP IN VAULT.
8. PRESSURE GAUGE.
9. GALVANIZED STEEL PIPE STANDS.
10. 1 1/2" GALVANIZED STEEL DISCHARGE. (SECURE AS REQUIRED W/ UNISTRUT)
11. QUICK DISCONNECT 24" MIN A.F.F.
12. 1 1/2" BALL VALVE
13. 1 1/2" CHECK VALVE

CONTROL VALVE SUB-NOTE

CONTROL VALVE SHALL BE CLA-VAL MODEL 131-AU ELECTRONIC CONTROL VALVE FOR TWO-WAY FLOW, OR ALTERNATIVE AS APPROVED BY THE TOWN OF ADDISON. THE VALVE SHALL BE EQUIPPED WITH AN X117DLCW VALVE POSITION TRANSMITTER WITH SINGLE LIMIT SWITCH TO PROVIDE A 4-20 mA SIGNAL OF VALVE POSITION. A 131VC-2 CONTROLLER SHALL BE PROVIDED FOR THE VALVE TO BE POSITIONED TO A SET POINT, ANYWHERE FROM 0% TO 100% OPEN, REGARDLESS OF FLOW DIRECTION. THE VALVE POSITION SHALL BE ABLE TO BE CONTROLLED BY SCADA, BOTH AUTOMATICALLY AND MANUALLY. THE VALVE SHALL BE POWER FAIL OPEN.

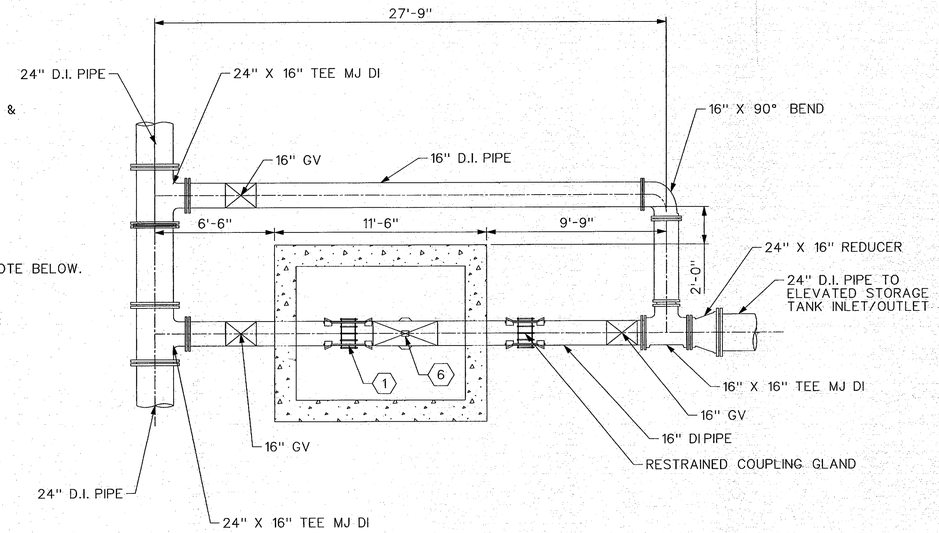

CONTROL VALVE BYPASS
1/4" = 1'-0"

4' 0 4' 8'
1/4"=1'-0"
1' 6" 0 1' 2'
1"=1'-0"

FREESE AND NICHOLS, INC.
TEXAS REGISTERED ENGINEERING FIRM F-2144
TEXAS RONALD G. KING 81073 REGISTERED PROFESSIONAL ENGINEER
1-19-11

FREESE AND NICHOLS
2220 San Jacinto Blvd., Suite 330
Denton, TX 76205
Phone - (940) 387-4600
Fax - (940) 387-4677
Web - www.freese.com

TOWN OF ADDISON, TEXAS
SURVEYOR 1.5 MG EST
CIVIL
FLOW CONTROL VALVE VAULT PLAN & SECTION

NO.	ISSUES	BY	DATE

F&N JOB NO. ADD08459
DATE 01/21/11
DESIGNED DAT
DRAWN SB
REVISED RJS
CHECKED RGK
FILE NAME CV-EST-DT-TYP04.SHT

VERIFY SCALE Bar is one inch on original drawing. If not one inch on this sheet, adjust scale.
0 1

SHEET DT-04

CV-EST-DT-TYP04.SHT
CV-EST-DT-TYP04.SHT
CV-EST-DT-TYP04.SHT
CV-EST-DT-TYP04.SHT
CV-EST-DT-TYP04.SHT
CV-EST-DT-TYP04.SHT
CV-EST-DT-TYP04.SHT
CV-EST-DT-TYP04.SHT
CV-EST-DT-TYP04.SHT
CV-EST-DT-TYP04.SHT

MicroStation V8 User: amr Office: Denton
Plotter: jl_plotter~_XM\Denton\1x17_Mono.slt
Date: 01\20\2011 - 08:42:00 AM Project: Freese and Nichols, Inc.

Office: Denton ADD08459 Date: 01\20\2011 - 08:42:00 AM User: amr File: N:\IF\Drawings\CV-EST-DT-TYP04.SHT