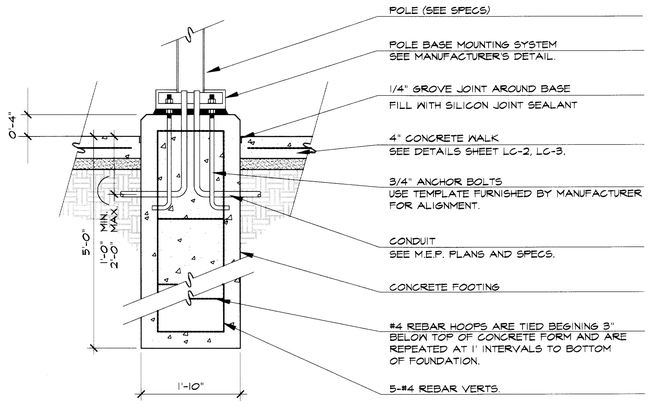

(A) STREET LIGHT FOUNDATION DETAIL

3/4"=1'-0"

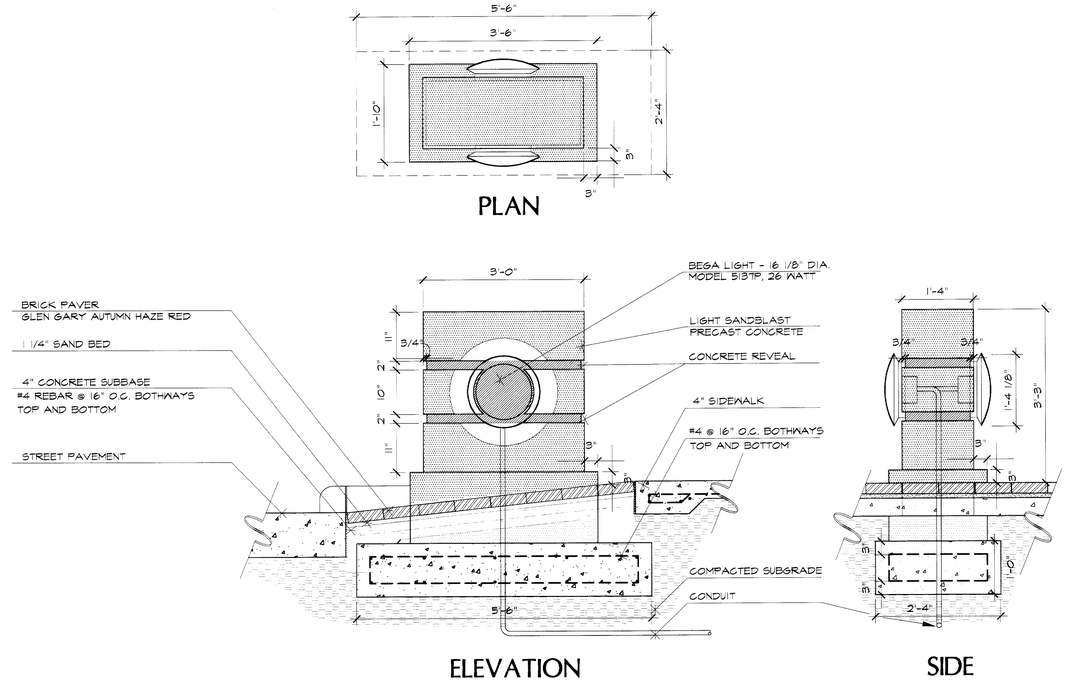

(B) CUSTOM PRE-CAST CONCRETE BOLLARD

3/4"=1'-0"

CONTRACTOR MUST PROVIDE SHOP DRAWING ON THIS ITEM.

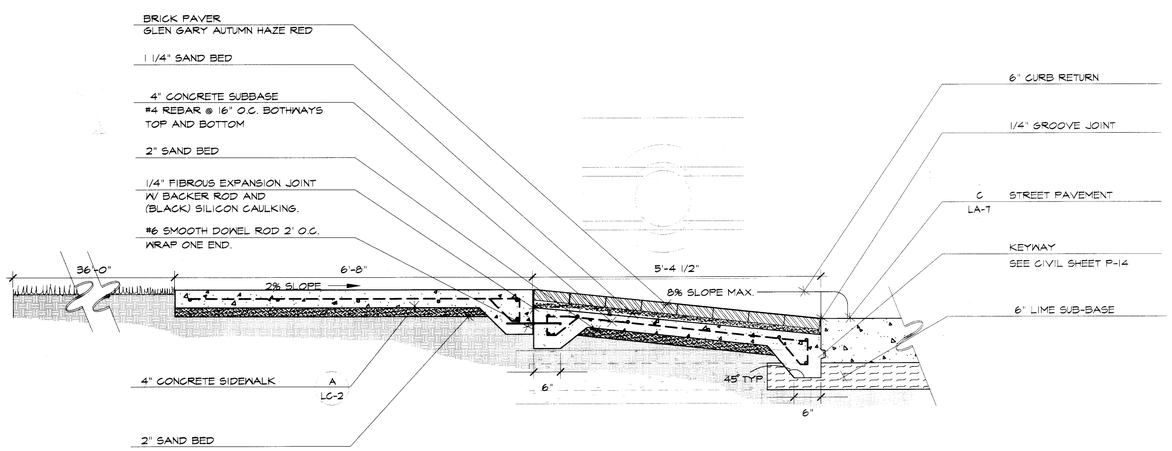

(C) TYPICAL ARAPAHO/QUORUM CORNER SECTION

3/4"=1'-0"

IMPORTANT!!!

1. MESA Design Group assumes no responsibility for any excavation or grading not shown on surveys or civil engineer's plans supplied to MESA Design Group.
2. All proposed and finished grades provided by MESA Design Group are based on information provided by owner's surveyor and/or civil engineer. Any discrepencies in actual field measurements are to be reported to landscape architect immediately.
3. Contractor shall be responsible for making himself familiar with all underground utilities, pipes, structures, and line runs.
4. Prior to commencement of hardscape construction, all piers, footings, and walls are to be surveyed, laid out, and staked in field for approval by landscape architect. Contractor shall assume responsibility for any demolition, adjustments, or reconstruction resulting from unauthorized construction activities.
5. Contractor is responsible for all final quantities per drawings and specifications. Any quantities provided by MESA Design Group are provided as a convenience only and shall not be considered absolute. Landscape architect should be notified if any discrepencies occur.

WRITTEN DIMENSIONS PREVAIL OVER SCALED DIMENSIONS.

THIS DRAWING AND THE DESIGN SHOWN IS THE PROPERTY OF THE LANDSCAPE ARCHITECT. THE REPRODUCTION, COPYING, OR USE OF THIS DRAWING WITHOUT WRITTEN CONSENT IS PROHIBITED AND ANY INFRINGEMENT WILL BE SUBJECT TO LEGAL ACTION.
© Copyright 1997 MESA Design Group

MESA DESIGN GROUP
Landscape Architecture
Urban Design
Land Planning

3100 McKinnon Street
Suite 905
Dallas, Texas 75201
(214) 871-0568 Fax: 871-1507

ARAPAHO ROAD STREETSCAPE

CITY OF ADDISON, TEXAS

Revisions

No.	Date	Item

Registration

STATE OF TEXAS
CHRISTOPHER T. RITTENHOUSE
868
REGISTERED LANDSCAPE ARCHITECT

RFM/ISP
Drawn
WGM
Checked
97018 — Project No.
12/12/97 — Date

Sheet Title

LIGHT FOUNDATION/BOLLARD DETAILS

Sheet No.

LC-4

PROJECTS\97018\7018LC-04