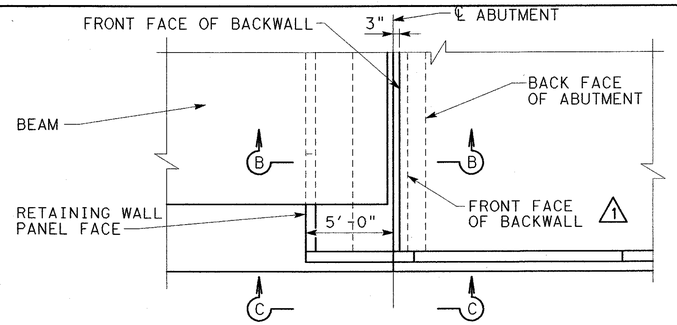

PLAN VIEW - SECTION A-A

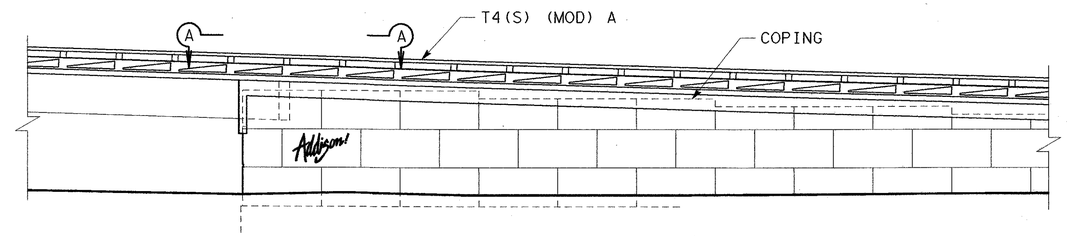

TYPICAL PANEL LAYOUT - ELEVATION

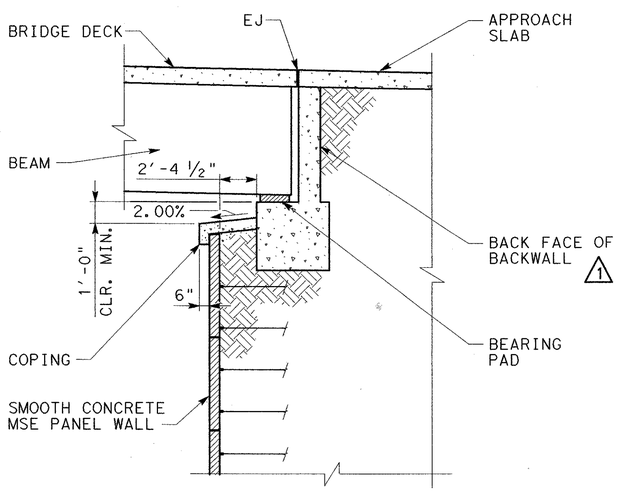

SECTION B-B

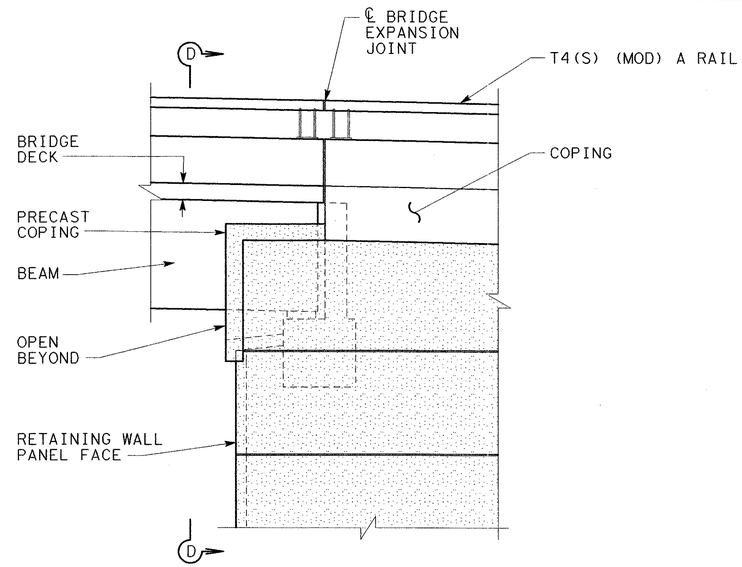

SECTION C-C

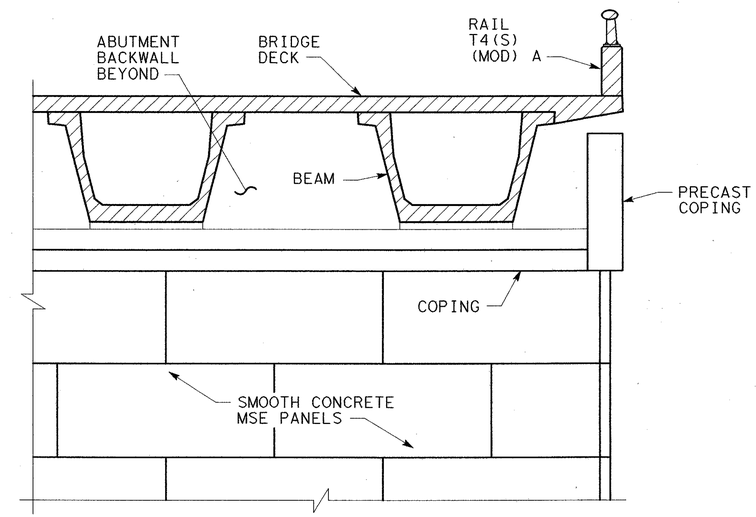

SECTION D-D

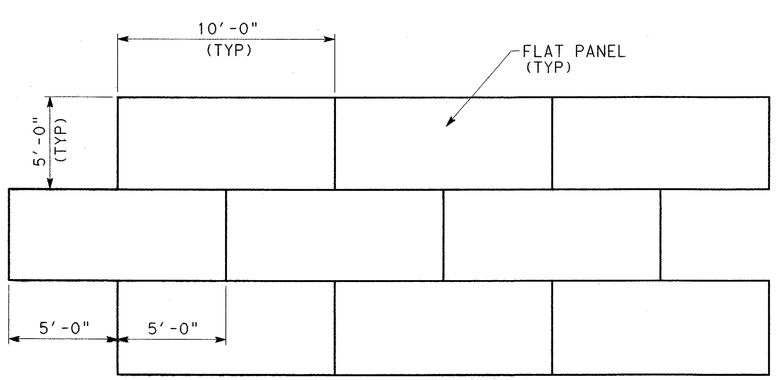

TYPICAL HORIZONTAL STAGGERING PANEL SYSTEM

GENERAL NOTES:

1. SEE RETAINING WALL PLAN, PROFILE, AND DETAIL SHEETS.
2. CONTRACTOR TO COORDINATE WITH THE TOWN OF ADDISON FOR THE ADDISON LOGO. ADDISON LOGO SHOULD BE RECESSED 1" MIN INTO THE PANEL ON THE FIRST FULL PANEL NEAR MID HEIGHT OF THE WALL. TYPICAL FOR EACH SIDE OF THE WALL.
3. SEE SURFACE FINISHES FOR STRUCTURES SHEET FOR RETAINING WALL COLORS.

STATE OF TEXAS
CLIFF R. HALL
82211
REGISTERED PROFESSIONAL ENGINEER
7/2/04

308

NO.	DATE	REVISION	APPROV.
1	05/24/04	ADDENDUM CHANGES	CRH

URS GREYSTONE CENTRE
5010 LBJ FREEWAY, SUITE 1500
DALLAS, TX 75234

ARAPAHO ROAD - PHASE III

SURVEYOR BOULEVARD TO ADDISON ROAD

MSE WALL PANEL SCHEME

TOWN OF ADDISON, TEXAS

Design	Drawn	DATE	SCALE	PROJECT NO.	SHEET NO.
Check	Check	05-07-04		25768	BR-70

7/2/2004 10:33:06 AM

\\urs\dal01\data\projects\arapaho road bridge\cadd\structures\retaining walls\ar3wrw01.dgn