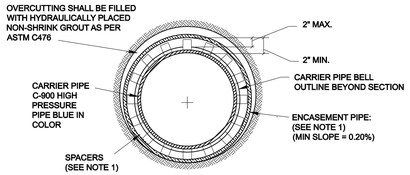

SECTION

NOTES:
(1) HIGH DENSITY POLYETHYLENE SPACERS, RACI OR EQUAL, SHALL BE USED. WHERE NO CASING PIPE IS REQUIRED OVERCUTTING AROUND UTILITY SHALL BE FILLED WITH HYDRAULICALLY PLACED NON-SHRINK GROUT AS PER ASTM C476.
(2) END GROUTING FOR ALL ENCASEMENTS SHALL BE AS PER ASTM STANDARD C476 (1:7 GROUT WITH 5% TO 40% AIR ENTRAINMENT). GROUT SHALL BE PLACED BY HYDRAULIC PUMP FROM THE LOWER END OF THE ENCASEMENT PIPE, THEREBY INSURING COMPLETE FILLING OF ENCASEMENT PIPE.
(3) ENCASEMENT PIPE SHALL BE EITHER DUCTILE IRON PIPE OR HIGH DENSITY STEEL PIPE. ALL JOINTS TO BE WELDED 100%.

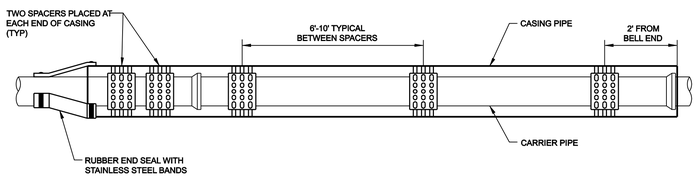

INSULATOR SPACING DETAIL

WATER MAIN ENCASEMENT

NOTE:
1. DESIGN, SITE REQUIREMENTS - THE GENERAL OPERATION, PAINTING AND DELIVERY OF ALL FIRE HYDRANTS SHALL BE IN ACCORDANCE WITH THE TOWN OF ADDISON WATER SYSTEM REQUIREMENTS.
2. FIRE HYDRANT SHALL BE LOCATED A MINIMUM OF ONE FOOT (1') OUTSIDE OF THE AREA BETWEEN THE P.C.'S OF THE CORNER TURNING RADIES AT INTERSECTION AND DRIVEWAY (SEE PLAN VIEW).

PLAN VIEW

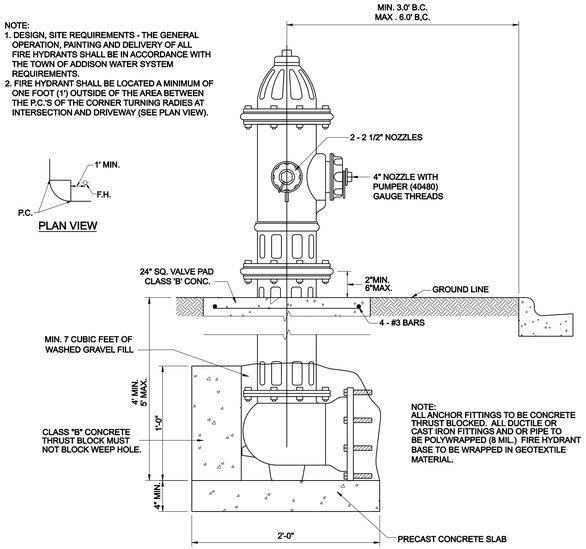

TYPICAL FIRE HYDRANT INSTALLATION

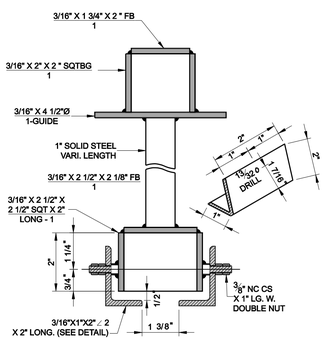

NOTE: TO BE USED ON ALL VALVES DEEPER THAN 5'-0".

TYPE - B
VALVE EXTENSION

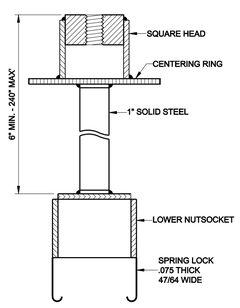

SPRING LOCK
VALVE EXTENSION

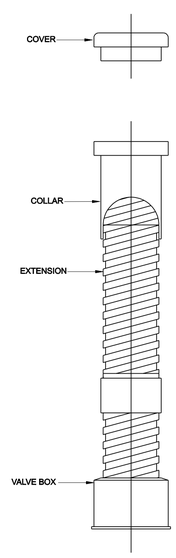

VALVE BOX WITH EXTENSION

ALL CAST IRON FITTINGS SHALL BE DOMESTIC.

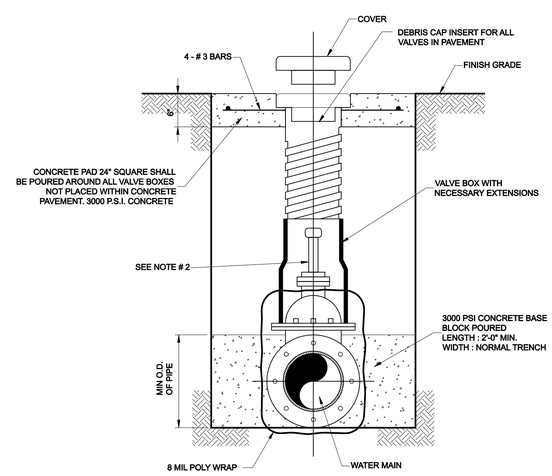

TYPICAL VALVE SETTING & BOX

NOTE:
1. 4"-12" R.S. GATE VALVES SHALL BE IN ACCORDANCE WITH TOWN OF ADDISON WATER SYSTEM REQUIREMENTS AND AWWA STD C509. ALL VALVES SHALL BE MUELLER OR APPROVED EQUAL.
2. A PERMANENTLY ATTACHED VALVE EXTENSION STEM SHALL BE REQUIRED FOR ANY VALVE THATS OPERATING NUT IS LOCATED IN EXCESS OF 5 FEET BELOW THE TOP OF VALVE BOX. THIS EXTENSION SHALL BE OF SUFFICIENT LENGTH TO INSURE THAT ITS TOP IS WITHIN 5 FEET OF VALVE BOX LID.
3. BLUE DOT (3") ON NEAREST CURB FACE TO VALVE.
4. ALL IRON MATERIALS SHALL BE DOMESTIC.

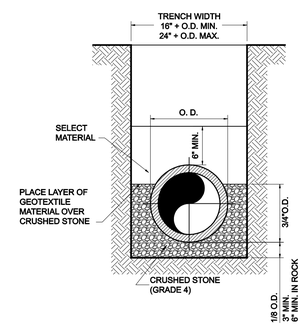

CRUSHED STONE SHALL BE 3/4", PASSING # 4 SIEVE

CLASS "B+" EMBEDMENT

TYPICAL BACKFILL WATER MAIN
P.V.C. WATER PIPE

STATE OF TEXAS
BRUCE F. DUNNE
62654
LICENSED
PROFESSIONAL ENGINEER
7/11/11

NO.	REVISION	BY	DATE

Addison!
TOWN OF ADDISON
DALLAS COUNTY, TEXAS

PAVING, DRAINAGE & UTILITY IMPROVEMENTS
BELLA LANE

WATER DETAILS

icon Consulting Engineers, Inc.
Civil Engineers - Designers - Planners
250 W. Southlake Blvd., Suite 117
Southlake, Tx 76092 (817) 552-6210

PROJECT	DESIGN	DRAWN	DATE	FILE	SHEET
5029-03	ICE	ICE	FEB 01, 2011	PW# 2010-08	31

PAVING, DRAINAGE, & UTILITY IMPROVEMENTS - BELLA LANE

RECORD DRAWINGS 06/13/12