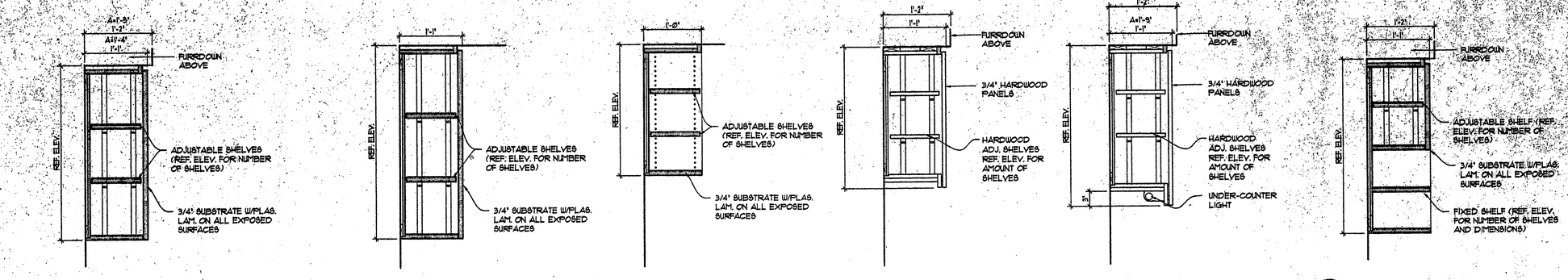


1 A5.07 SECTION
SCALE : 1" = 1'-0"

2 A5.07 SECTION
SCALE : 1" = 1'-0"

3 A5.07 SECTION
SCALE : 1" = 1'-0"

4 A5.07 SECTION
SCALE : 1" = 1'-0"

5 A5.07 SECTION
SCALE : 1" = 1'-0"

6 A5.07 SECTION
SCALE : 1" = 1'-0"

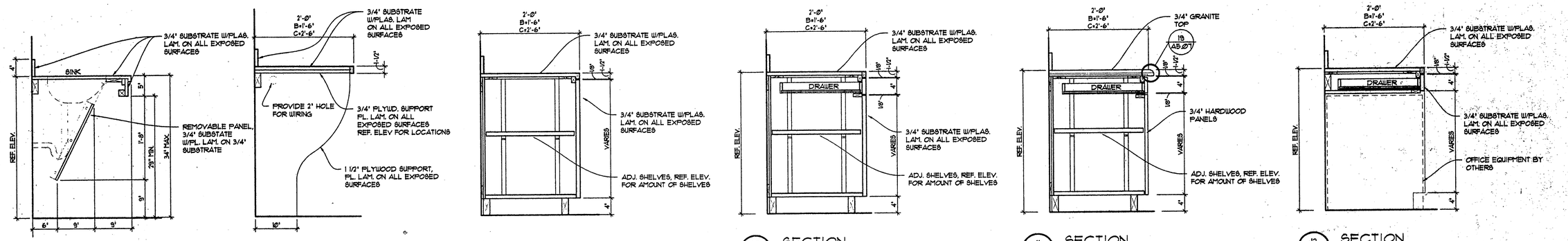


7 A5.07 SECTION
SCALE : 1" = 1'-0"

8 A5.07 SECTION
SCALE : 1" = 1'-0"

9 A5.07 SECTION
SCALE : 1" = 1'-0"

10 A5.07 SECTION
SCALE : 1" = 1'-0"

11 A5.07 SECTION
SCALE : 1" = 1'-0"

12 A5.07 SECTION
SCALE : 1" = 1'-0"

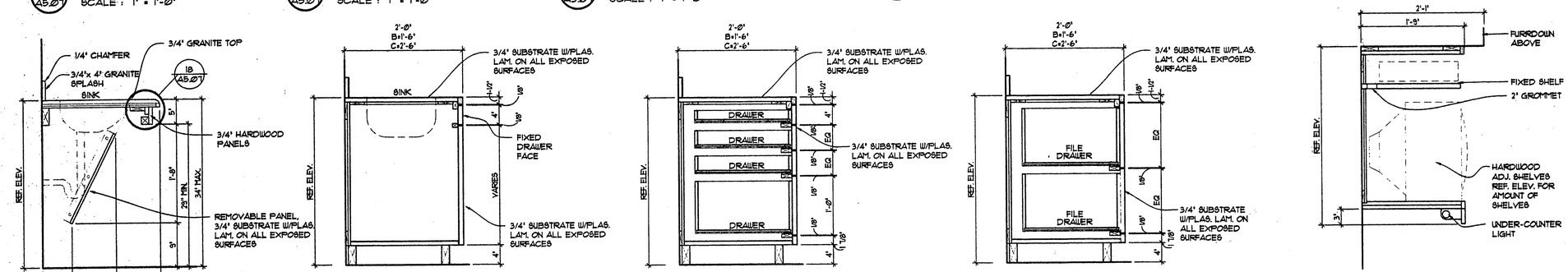


13 A5.07 SECTION
SCALE : 1" = 1'-0"

14 A5.07 SECTION
SCALE : 1" = 1'-0"

15 A5.07 SECTION
SCALE : 1" = 1'-0"

16 A5.07 SECTION
SCALE : 1" = 1'-0"

17 A5.07 SECTION
SCALE : 1" = 1'-0"

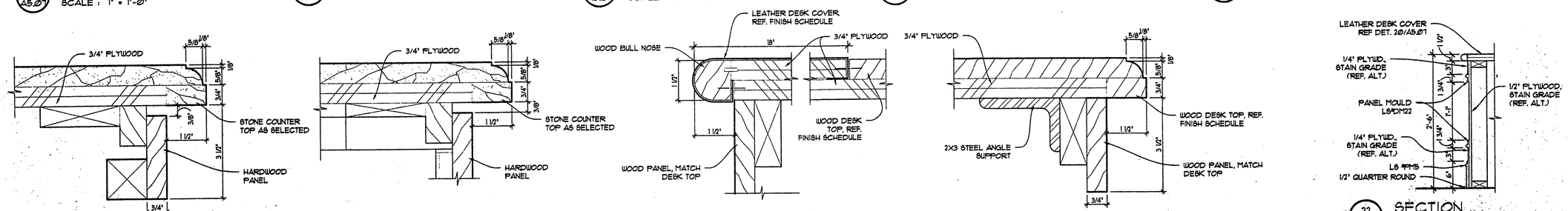


18 A5.07 COUNTER EDGE DETAIL
SCALE : 6" = 1'-0"

19 A5.07 COUNTER EDGE DETAIL
SCALE : 6" = 1'-0"

20 A5.07 TELLER DESK DETAIL
SCALE : 6" = 1'-0"

21 A5.07 TELLER DESK DETAIL
SCALE : 6" = 1'-0"

22 A5.07 SECTION
SCALE : 1" = 1'-0"

Copyright © 2000 ROGERS-FORD, L.C.
Drawing: P:\1804 LSB - Addison Archive-Drawings\sheets\v-14 drawings\1804A507.dwg at: Aug 18, 2000-11:32am by chris

R-F
ROGERS - FORD
ARCHITECTURE - INTERIOR DESIGN
2616 THOMAS AVENUE
DALLAS, TEXAS 75204
TELEPHONE (214) 871-9388
FAX (214) 871-3155

LONE STAR BANK
Beltwood Parkway East
at Beltline Road
Addison, TX

Project # 1804

7-25-00 ISSUED FOR PERMIT
8-17-00 ISSUE FOR BID

A5.07

# MILLWORK DETAILS