PLANTING SPECIFICATIONS

WEED CONTROL: KILL AND REMOVE ALL EXISTING WEEDS FROM THE SITE AREA. UPON COMPLETION OF SOIL PREPARATION, THE CONTRACTOR SHALL APPLY A SELECTIVE PRE-EMERGENT TO ALL PLANTING AREAS EXCEPT SEEDED LAWN AREAS.

CULTIVATION - IMMEDIATELY AFTER APPLICATION OF WEED CONTROL, CULTIVATE ALL AREAS TO A DEPTH OF 1-1/2".

FINISH GRADING: MAKE ALL SOIL AREAS SMOOTH AND EVEN WITH A FINISH GRADE OF 1" (ONE INCH) BELOW THE SURFACE OF WALKS, PAVED AREAS AND CURBS AND SLIGHTLY LESS THAN FLUSH WITH CATCH BASINS, MANHOLES, CLEAN OUTS, VALVE BOXES AND SIMILAR FEATURES. RAKE CLEAN ALL AREAS.

SOIL PREPARATION AND FERTILIZATION: IN ALL PLANTING AREAS THE FOLLOWING APPLICATION SHALL BE MADE PER 1,000 SQ. FT. OF AREA AND SHALL BE THOROUGHLY CULTIVATED IN TWO DIRECTIONS INTO THE TOP 6" OF SOIL, AND THE AREA WATERED DOWN: 2 CUBIC YARDS NITROGEN STABILIZED SAWDUST, 100 LBS. AGRICULTURAL GYPSUM, 150 LBS. GRO-POWER PLUS COMMERCIAL FERTILIZER.

DEEP RIP ALL AREAS TO BE PLANTED OR SEEDED TO A UNIFORM DEPTH OF AT LEAST 12" AND FOR THIS ENTIRE DEPTH THE SOIL SHALL BE MADE LOOSE AND FRIABLE.

ALL MATERIALS SHALL BE UNIFORMLY AND THOROUGHLY BLENDED BY REPEATED ROTARY CULTIVATION INTO THE 6" OF TOP SOIL.

AT TIME OF PLANTING, THE TOP 2" (TWO INCHES) OF ALL AREAS TO BE PLANTED OR SEEDED SHALL BE FREE OF STONES, WEEDS, ROOTS OR OTHER DELETERIOUS MATTER 1" (ONE INCH) IN DIAMETER OR LARGER AND SHALL BE FREE FROM ALL WIRE, PLASTER OR SIMILAR OBJECTS THAT WOULD BE A HINDRANCE TO PLANTING OR MAINTENANCE. REMOVE ALL DEBRIS FROM THE SITE.

AFTER 30 DAYS (MAINTENANCE PERIOD) APPLY 25 LBS. PER 1,000 SQ. FT. OF GRO-POWER PLUS IN ALL LANDSCAPE AREAS.

REFER TO SOILS REPORT FOR ANY ADDITIONAL SOIL AMENDMENTS.

BACKFILL MIX - TREES, SHRUBS AND VINES:
SOIL MIX FOR BACKFILL IN PITS FOR TREES, SHRUBS AND VINES SHALL CONSIST OF THE FOLLOWING:

AMOUNT/CUBIC YARD
60% BY VOLUME ON-SITE SOIL
40% BY VOLUME ORGANIC AMENDMENT
2 LBS. AGRICULTURAL GYPSUM
15 LBS. GRO-POWER PLUS

PLANTING PITS SHALL BE EXCAVATED TWICE THE DIAMETER AND TWICE THE DEPTH OF THE ROOT BALL. BACKFILL SHALL THEN BE ADDED AS OUTLINED ABOVE. THE PREPARED SOIL SHALL BE UNIFORMLY BLENDED IN AN AREA ADJACENT TO THE PLANTING WORK AND SHALL BE ACCURATELY PROPORTIONED USING A SUITABLE MEASURING CONTAINER. UNUSED EXCAVATED SOIL SHALL BE REMOVED FROM SITE. PROTECT THE MIX FROM WATER UNTIL IT HAS BEEN PLACED IN BACKFILL AROUND PLANTS.

INSTALL PLANTING TABLETS IN THE FOLLOWING APPLICATIONS: 7 GRAM TABLETS BY GRO-POWER INTO PLANTING PITS AS PER DETAIL.

EACH GALLON PLANT - 2 TABLETS
EACH 5 GALLON PLANT - 4 TABLETS
EACH 15 GALLON PLANT - 8 TABLETS

SPECIMEN PLANTS LARGER THAN 15 GALLON SIZE SHALL BE 3 TABLETS PER 1/2" CALIPER OF TREE TRUNK.

AGRONOMIC SOILS REPORT:
a. AFTER COMPLETION OF ROUGH GRADING & PRIOR TO SOIL PREPARATION, THE CONTRACTOR SHALL PROVIDE THE TESTING OF PLANTING SOILS & COMPOSTED ORGANIC HUMUS MATERIALS BY AN INDEPENDENT AGRONOMIC SOILS TESTING LABORATORY THAT IS A MEMBER OF THE CALIFORNIA ASSOCIATION OF AGRICULTURAL LABS. REPRESENTATIVE SOILS SAMPLES SHALL BE TAKEN IN THE FIELD & A WRITTEN REPORT SHALL BE PREPARED BY THE SOIL SCIENTIST THAT SHALL INCLUDE RECOMMENDATIONS FOR SOIL AMENDMENTS, PRE-PLANT FERTILIZATION, HYDROMULCH SLURRY & POST-MAINTENANCE FERTILIZATION PROGRAM.

b. SOIL PREPARATION SPECIFICATIONS SHALL BE PREPARED BASED ON THE TEST RESULTS & RECOMMENDATIONS AND MUST BE APPROVED BY THE CITY PRIOR TO SOIL PREPARATION.

c. SOIL TESTS SHALL BE PERFORMED AFTER SOIL PREPARATION TO CONFIRM THAT SOIL PREPARATION WAS PERFORMED IN COMPLIANCE WITH PRE-PLANT SOILS REPORT & SPECIFICATIONS. COMPLIANCE OF CONTRACTOR'S WORK WITH SOIL PREPARATION SPECIFICATIONS SHALL BE DETERMINED SOLELY BY THE CITY.

GUARANTEE: ALL SPECIMEN TREES AND ALL SHRUBS OF 15 GALLON SIZE AND LARGER SHALL BE GUARANTEED BY THE CONTRACTOR TO TAKE ROOT AND GROW IN A HEALTHY CONDITION FOR ONE YEAR AFTER COMPLETION OF ALL CONTRACTOR'S LANDSCAPE PLANTING WORK PROVIDING SAID TREES AND SHRUBS HAVE RECEIVED NORMAL CARE AND MAINTENANCE AS DETERMINED BY THE LANDSCAPE ARCHITECT AND OWNER.

ALL OTHER PLANTINGS INCLUDING, BUT NOT NECESSARILY LIMITED TO, GROUND COVER, VINES, ETC. SHALL BE GUARANTEED BY THE CONTRACTOR TO TAKE ROOT AND GROW IN A HEALTHY CONDITION FOR SIXTY (60) DAYS AFTER COMPLETION OF ALL CONTRACTOR'S LANDSCAPE PLANTING WORK.

ANY OF SAID TREE, SHRUBS, OR OTHER PLANTINGS WHICH DIE BACK OR LOSE FORM AND SIZE AS ORIGINALLY SPECIFIED SHALL BE REPLACED WITHOUT DELAY BY CONTRACTOR WHEN REQUESTED BY LANDSCAPE ARCHITECT AND/OR OWNER, AT NO COST TO OWNER.

IRRIGATION SPECIFICATIONS

INSTALL ALL MATERIALS TO COMPLY WITH LOCAL CODES AND ORDINANCES. VERIFY PRESSURE SHOWN PRIOR TO BEGINNING OF CONSTRUCTION.

VERIFICATION: ALL SCALED DIMENSIONS ARE APPROXIMATE. BEFORE PROCEEDING WITH ANY WORK, THE CONTRACTOR SHALL CAREFULLY CHECK AND VERIFY ALL DIMENSIONS, LOCATIONS OF VALVES AND VACUUM BREAKERS SHALL BE AS INDICATED ON THE DRAWINGS. ANY DEVIATION FROM THE PLAN MUST HAVE THE APPROVAL OF THE LANDSCAPE ARCHITECT. LOCATION OF ALL BACKFLOW AND CONTROLLERS SHALL BE APPROVED BY THE LANDSCAPE ARCHITECT.

PERMIT AND FEES: THE CONTRACTOR SHALL APPLY AND PAY FOR ALL NECESSARY FEES AND PERMITS REQUIRED IN THE PURSUIT OF HIS WORK AS REQUIRED BY GOVERNING CODES.

EXCAVATIONS: DEPTHS OF MINIMUM COVER UNLESS OTHERWISE SPECIFIED BELOW FINISH GRADE.
1. MAIN LINE PRESSURE PLASTIC - 18" MINIMUM COVER, 24" UNDER PAVING, SAND BACKFILL.
2. QUICK COUPLER LINES - 1-1/2" AND SMALLER MAIN LINE 18"
3. LATERAL SPRINKLER LINES - 12" + SAND BACKFILL UNDER PAVING.
4. CONTROL WIRING - 18".

THE IRRIGATION CONTRACTOR SHALL NOT WILLFULLY INSTALL SPRINKLER SYSTEMS AS INDICATED ON THE DRAWINGS WHEN IT IS OBVIOUS IN THE FIELD THAT THERE ARE UNKNOWN OBSTRUCTIONS, GRADE DIFFERENCES AND/OR DISCREPANCIES IN AREA DIMENSIONS, UNTIL SUCH CONDITIONS ARE BROUGHT TO THE ATTENTION OF THE LANDSCAPE ARCHITECT.

INSTALL ALL EQUIPMENT AND MATERIALS AS SHOWN IN DETAILS AND SPECIFICATIONS.

ALL PIPING UNDER PAVED AREAS SHALL BE INSTALLED PRIOR TO PAVING. USE PVC CLASS 315 FOR 2" AND LARGER AND PVC SCHEDULE 40 FOR 1-1/2" AND SMALLER. PROVIDE SAND BACKFILL OVER PIPING CROSSING ANY ROADWAY OR AC PAVING.

ALL PIPING BETWEEN WATER METER AND BACKFLOW PREVENTER SHALL BE PER LOCAL CODE.

VALVE BOXES SHALL BE AMETEK #12-131-001 WITH AMETEK #12-131-007 COVER MARKED "IRRIGATION CONTROL VALVE."

INSTALL CONTROLLER AS CALLED FOR ON THE DRAWINGS. OWNER SHALL PROVIDE 110 VOLT SERVICE TO CONTROLLER. IRRIGATION CONTRACTOR SHALL MAKE FINAL HOOK-UP TO CONTROLLER.

INSTALL 24 VOLT CONTROL WIRING ON #14 UF DIRECT BURIAL IRRIGATION WIRE. USE BLACK FOR PILOT, USE WHITE FOR COMMON WIRE.

USE EPOXY TAPE CONNECTORS FOR SPLICING OF WIRES. BURY WIRES IN SAME TRENCH AS MAIN LINE WITH SIX 1" DIA. x 30" LINEAR EXPANSION COILS EVERY 100' AND AT VALVES. INSTALL WIRES IN PVC SLEEVE UNDER PAVING.

ADJUST RISER HEIGHT ON SHRUB POP-UP SPRAYS. SHRUB HEADS SHALL BE 2" ABOVE GRADE ALONG PARKING AREAS, CURBS OR SIDEWALKS. HEIGHT OF HEAD IN PLANTING AREAS SHALL BE 6" ABOVE GRADE. INSTALL HEADS 6" FROM WALKS OR WALLS.

ADJUST SPRINKLERS FOR REQUIRED COVERAGE. KEEP OVERTHROW AT A MINIMUM, ADJUST PRESSURE OF SYSTEM TO AVOID FOGGING OR OVERSPRAYING. PERFORM A COVERAGE TEST UPON COMPLETION IN PRESENCE OF LANDSCAPE ARCHITECT.

CONTRACTOR SHALL SUBMIT "AS-BUILT" DRAWINGS TO OWNER. LOCATE VALVES, QUICK COUPLERS AND MAIN LINE LOCATION WITH DIMENSIONS FROM THE NEAREST PERMANENT POINT OF REFERENCE.

CONTRACTOR SHALL FURNISH THREE (3) QUICK COUPLING KEYS EQUIPPED WITH HOSE SWIVELS.

TESTS: ALL PRESSURE LINES SHALL BE TESTED PRIOR TO BACKFILL OPERATIONS. CENTER LOAD PLASTIC PIPE WITH SMALL AMOUNT OF BACKFILL TO PREVENT ARCHING AND WHIPPING UNDER PRESSURE.

GUARANTEE: THE ENTIRE IRRIGATION SYSTEM SHALL BE GUARANTEED BY THE CONTRACTOR TO GIVE COMPLETE AND SATISFACTORY SERVICE AS TO MATERIAL AND WORKMANSHIP FOR A PERIOD OF ONE YEAR FROM THE DATE OF FINAL ACCEPTANCE OF THE WORK BY THE OWNER.

SHOULD ANY TROUBLE DEVELOP WITHIN THE SPECIFIED GUARANTEE PERIOD, WHICH IN THE OPINION OF THE OWNER IS DUE TO INFERIOR OR FAULTY MATERIAL AND/OR WORKMANSHIP, THE TROUBLE SHALL BE CORRECTED, WITHOUT DELAY, BY THE CONTRACTOR TO THE SATISFACTION OF THE OWNER AND AT NO EXPENSE TO THE OWNER AS PART OF THIS CONTRACT.

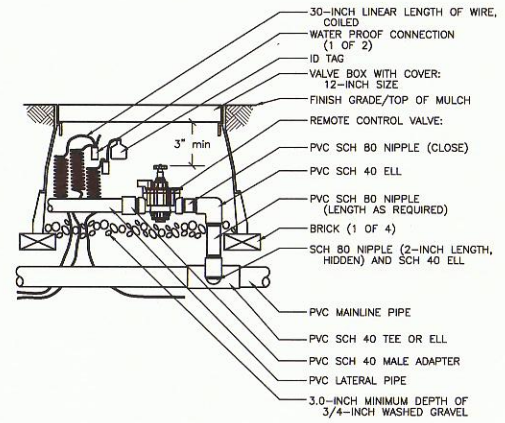

E CONTROL VALVE

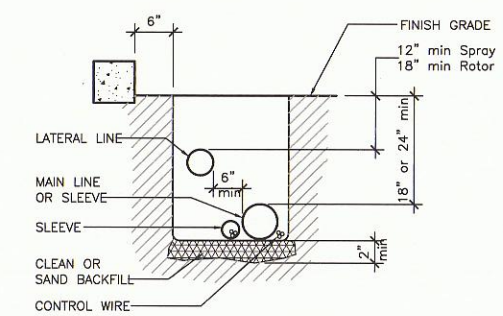

A TRENCHING

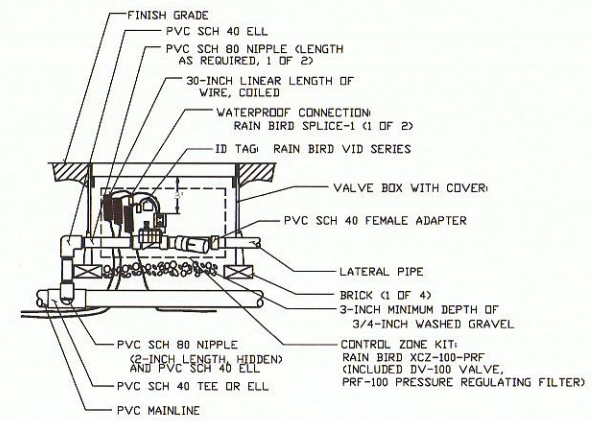

NOTES:
1. TO REPLACE INLINE WYE FILTERS. USE REPLACEMENT FILTER ELEMENTS RAIN BIRD MODELS RBY-150MX OR RBY-200MX.

F DRIP VALVE KIT

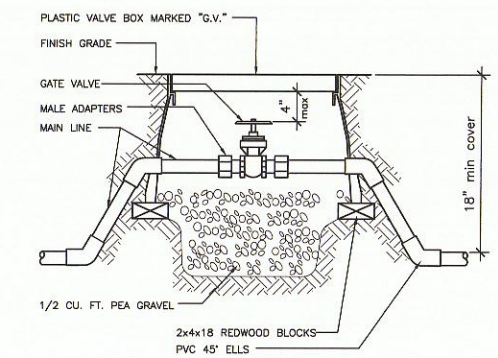

MANUALLY COMPACT ALL SOIL AROUND BOX BEFORE JETTING TRENCH.

B GATE VALVE

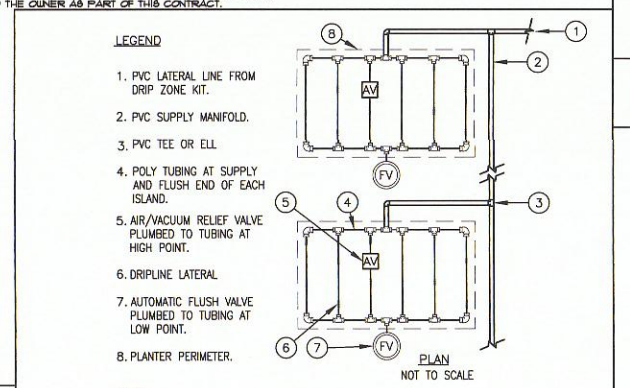

NOTE:
THE TOTAL LENGTH OF ALL INTERCONNECTED DRIP LINE SHALL NOT EXCEED THE MAXIMUM RUN LENGTH.

INSTALLATION TO BE COMPLETED IN ACCORDANCE WITH MANUFACTURER'S SPECIFICATIONS

I DRIP LAYOUT

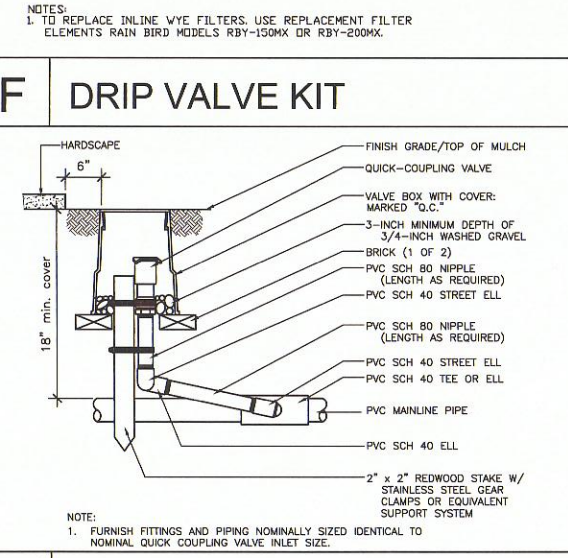

NOTE:
1. FURNISH FITTINGS AND PIPING NOMINALLY SIZED IDENTICAL TO NOMINAL QUICK COUPLING VALVE INLET SIZE.

G QUICK COUPLER

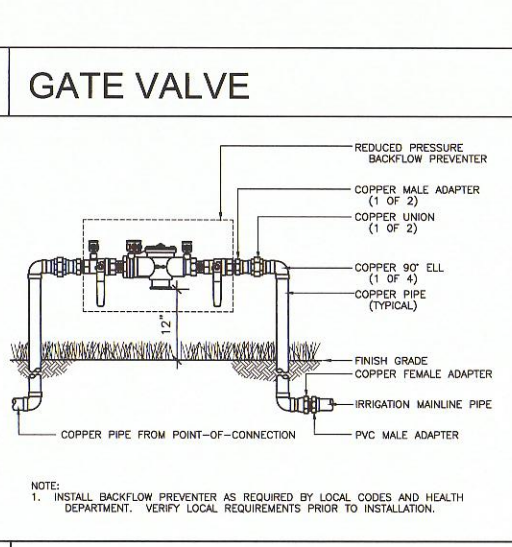

NOTE:
1. INSTALL BACKFLOW PREVENTER AS REQUIRED BY LOCAL CODES AND HEALTH DEPARTMENT. VERIFY LOCAL REQUIREMENTS PRIOR TO INSTALLATION.

C BACKFLOW PREVENTER

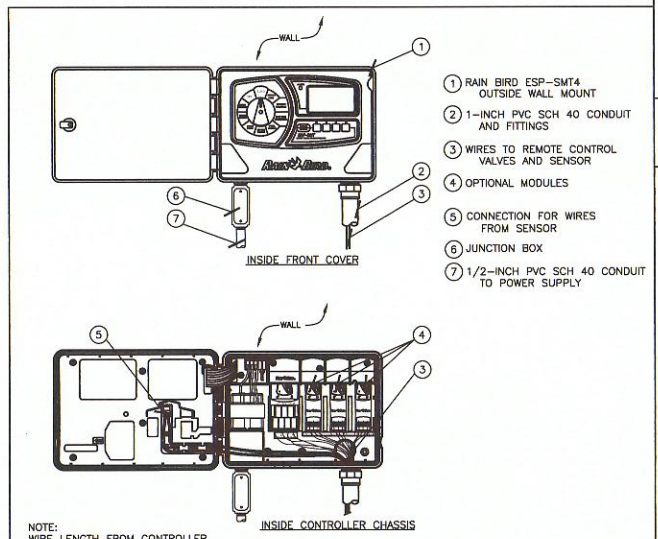

NOTE:
WIRE LENGTH FROM CONTROLLER TO SENSOR NOT TO EXCEED 200 FEET.

K CONTROLLER

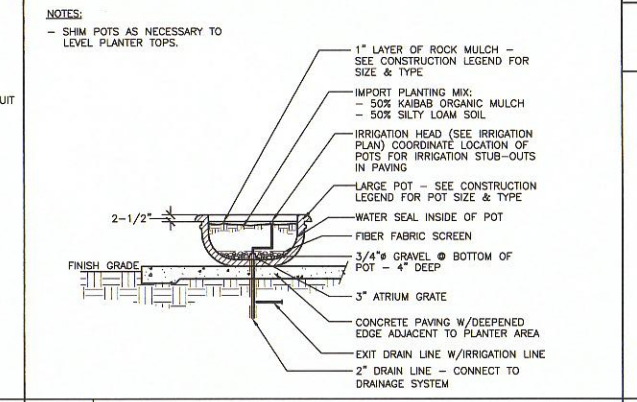

J IRRIGATION TO POTS

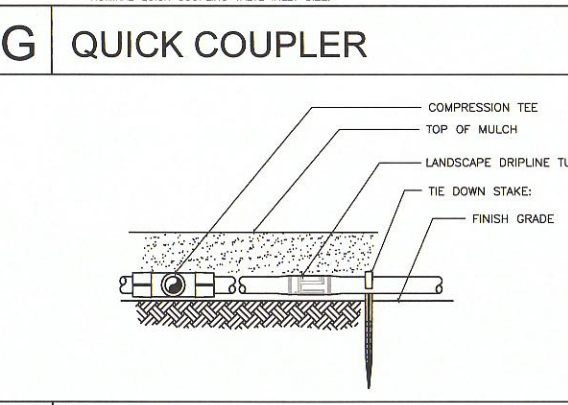

H DRIPLINE

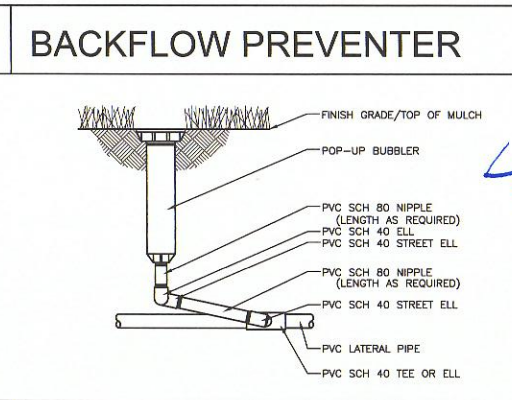

D POP-UP BUBBLER

Approved for Construction
Town of Addison Parks Dept.
12.17.14

LANDSCAPE ARCHITECTURE
23011 Moulton Parkway
Suite J12 - Laguna Hills, CA 92653
(949) 855-6413
FAX 830-4405
PLANNING - RESEARCH
STAN SMITH ASSOCIATES

Sheet Title: DETAILS
Original drawings size is 30" x 42"

Project:
VILLAGE ON THE PARKWAY
5100 BELT LINE RD
ADDISON, TX 7524

LAZY DOG RESTAURANT & BAR

Issue Date: 12-1-14

Revisions
1 DEC 2014 Plan Check Re-Submittal
1 DEC 2014 Bid Set

Scale: NOT TO SCALE
Drawn By: NS
Checked By: SSA
Sheet Number: L-3