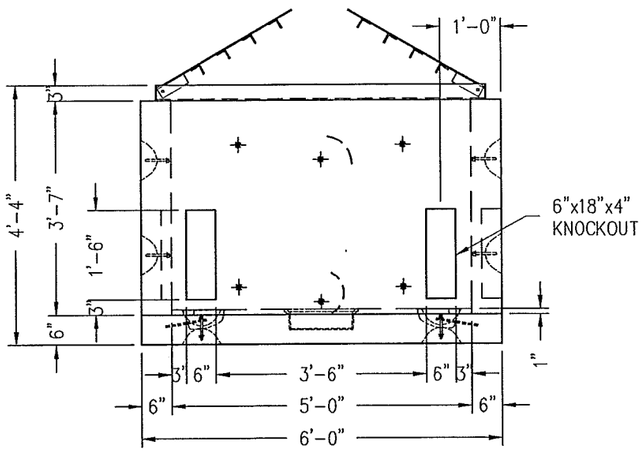

WALLS A & C

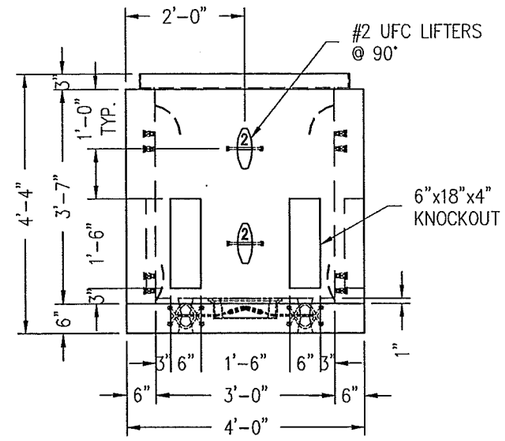

WALLS B & D

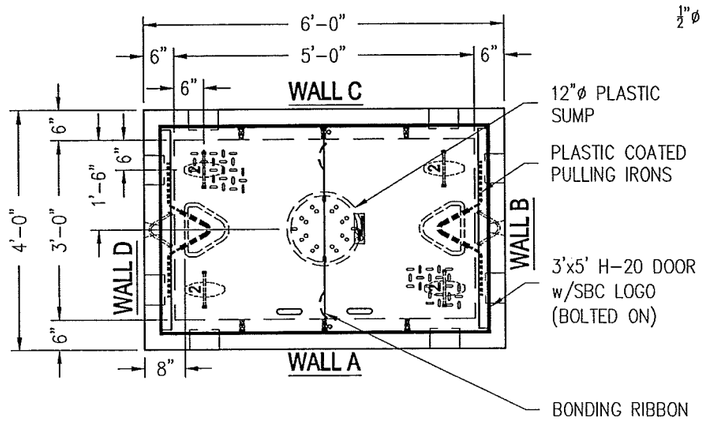

PLAN VIEW

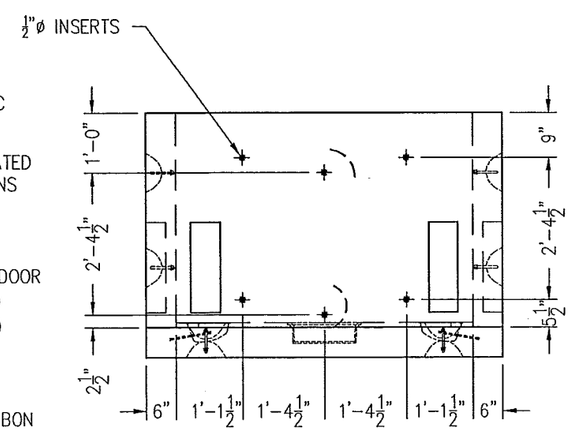

INSERT LAYOUT

DOOR NOT SHOWN

DESIGN NOTES

1) ALL CONCRETE TO HAVE 28 DAY COMPRESSIVE STRENGTH OF 5,000 PSI
2) CEMENT: TYPE I/II
3) STEEL REINFORCEMENT: REBAR, ASTM A-615 GRADE 60
4) DESIGN LOADINGS:
   A. AXLE LOAD: HS-20 w/IMPACT
   B. WHEEL LOAD: 16 Kips
   C. SOIL WEIGHT WET: 120 Pcf.
   D. EQUIVALENT SOIL FLUID PRESSURE:
      DRY SOIL = 45 Pcf.
      SATURATED SOIL = 84 Pcf.
   E. LATERAL LIVE LOAD SURCHARGE (FROM GRADE TO 8.0 FT.): 80 Psf.
   F. SOIL COVER:
      MIN. = 0 FT.
      MAX. = 0 FT.
   G. ASSUMED WATER TABLE AT DEPTH OF: 3 FT.

BILL OF MATERIALS

QTY	DESCRIPTION/TYPE
1	3'x5' INWESCO H-20 DOOR w/ SBC LOGO
–	(BOLTED-ON)
2	PLASTIC COATED PULLING IRONS
12	#2 UFC LIFTERS @ 90°
1	12"ø PLASTIC SUMP
12	1/2"ø INSERTS
4	BONDING RIBBON & CLAMPS
–	–
–	–
–	–
–	–
–	–
–	–
–	–
–	–

PRODUCT WEIGHTS/YD.^{3}

ROOF SLAB	–#	–yd^3
TOP	–#	–yd^3
EXTENSION1	4,850#	1.195yd^3
EXTENSION2	–#	–yd^3
BOTTOM	–#	–yd^3
FLOOR SLAB	2,100#	.519yd^3
TOTALS:	6,950#	1.713yd^3

SPLICE BOX
3'-0" x 5'-0" x 3'-7"
SBC
STANDARD

CONTROL#: N/A	PROJECT#: N/A
DRAWN BY: DCT	ORDER#: –
DATE: 07/27/05	SOLD BY: –
REVISIONS: –	SCALE: 3/8"=1'
CHECKED BY:	DATE:
DWG NAME: –	PAGE 1 OF 3

THIS DRAWING IS THE PROPERTY OF OLDCASTLE PRECAST. IT IS SUBMITTED FOR REFERENCE PURPOSES ONLY AND SHALL NOT BE USED IN ANY WAY INJURIOUS TO THE INTERESTS OF SAID COMPANY.

Oldcastle Precast, Inc.
1100 HERITAGE PKWY.
MANSFIELD, TX 76063
PHONE: (817) 453-1054
FAX: (817) 453-4007

STATE OF TEXAS
CHARLIE BARTHELL MORAN, JR.
101189
LICENSED
PROFESSIONAL ENGINEER

P.E. 3-25-14
Signature of Registrant Date

FIRM REGISTRATION NUMBER: 312

NO.	REVISION	BY	DATE

Addison TOWN OF ADDISON
DALLAS COUNTY, TEXAS

BELT LINE ROAD
UNDERGROUND ELECTRICAL

AT&T HANDHOLE DETAILS

HALFF
1201 NORTH BOWSER ROAD, RICHARDSON, TEXAS 75081-2275
TEL (214) 346-6200 FAX (214) 739-0095

PROJECT	DESIGN	DRAWN	DATE	FILE	SHEET
29350	HALFF	HALFF	MAR. 2014	29350 TEL 07B	TEL-7B