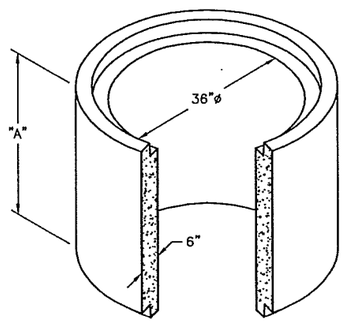

36" Dia. Neck Extension

Weight – See Table
Item# – See Table

Neck Data			
"A"	Weight	TSN	Item#
6	400	N/A	1102220
12	825	320774	1102300
18	1225	320775	1102340
24	1650	320776	1102380
36	2475	320777	1102440

SCALE: 1/2" = 1'-0"

Oldcastle Precast

1100 Heritage Parkway, Mansfield, Texas 76063
Phone: 817.453.1054 Fax: 817.453.4007

NECKRING

FILE NAME: 260UAANECKRING_F.dwg
ISSUE DATE: January, 2006
www.oldcastleprecast.com

36" Diameter Neck Ring Extension No Steps

Copyright © 2006 Oldcastle Precast, Inc.

SPECIFICATIONS:

1. Concrete: Has a Design Strength of 6,000 psi at 28 Days.
2. Steel Reinforcement: ASTM A–185.
3. Loading: Designed for H20 Loading.

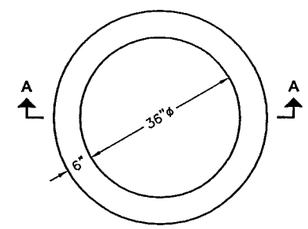

PLAN VIEW

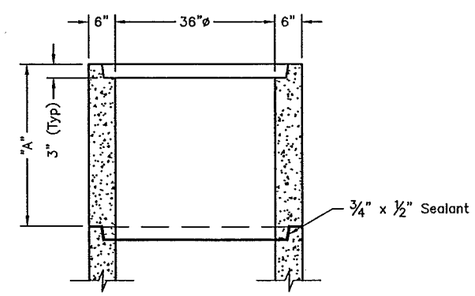

SECTION A-A

Neck Data			
"A"	Weight	TSN	Item#
6	400	N/A	1102220
12	825	320774	1102300
18	1225	320775	1102340
24	1650	320776	1102380
36	2475	320777	1102440

SCALE: 1/2" = 1'-0"

Oldcastle Precast

1100 Heritage Parkway, Mansfield, Texas 76063
Phone: 817.453.1054 Fax: 817.453.4007

NECKRING

FILE NAME: 260UAANECKRING_B.dwg
ISSUE DATE: January, 2006
www.oldcastleprecast.com

36" Diameter Neck Ring Extension No Steps

Copyright © 2006 Oldcastle Precast, Inc.

STATE OF TEXAS
CHARLIE BARTHELL MORAN
101189
LICENSED
PROFESSIONAL ENGINEER

Signature of Registrant, P.E. 3-25-14 Date

FIRM REGISTRATION NUMBER: 312

NO.	REVISION	BY	DATE

Addison TOWN OF ADDISON
DALLAS COUNTY, TEXAS

BELT LINE ROAD
UNDERGROUND ELECTRICAL

TIME WARNER CABLE DETAILS

HALFF
1201 NORTH BOWSER ROAD, RICHARDSON, TEXAS 75081-2275
TEL (214) 348-6200 FAX (214) 739-0095

PROJECT	DESIGN	DRAWN	DATE	FILE	SHEET
29350	HALFF	HALFF	MAR. 2014	29350 TEL OTE	TEL-7E