A	SR–REVISED PRODUCT WEIGHT	07/29/11

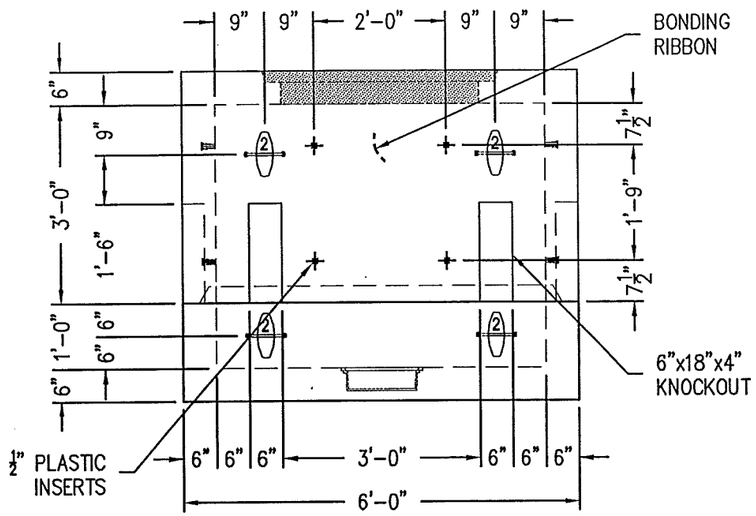

WALLS A & C

PULL IRON NOT SHOWN

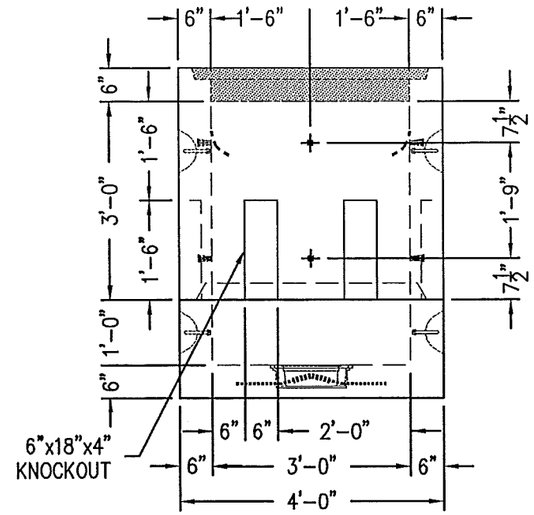

WALL B

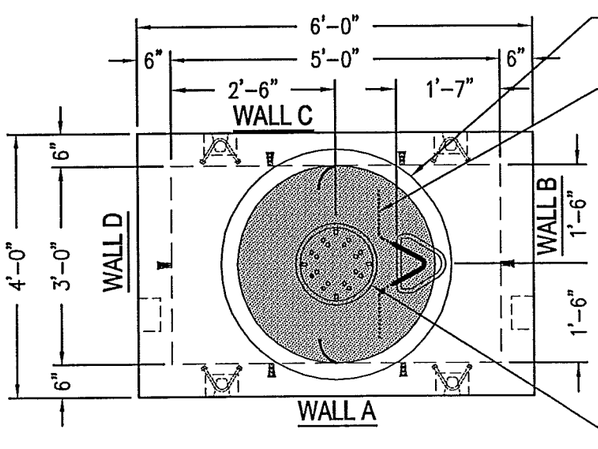

PLAN VIEW

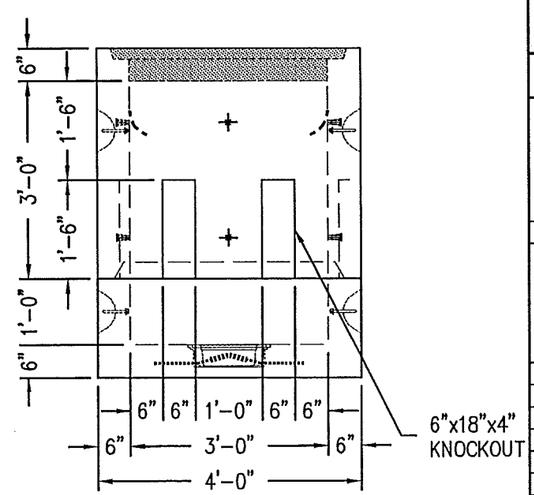

WALL D

TOP ITEM #1041910 & BOTTOM ITEM #1041830

DESIGN NOTES

1) ALL CONCRETE TO HAVE 28 DAY COMPRESSIVE STRENGTH OF 6,000 PSI
2) CEMENT: TYPE I/II
3) STEEL REINFORCEMENT: REBAR, ASTM A–615 GRADE 60
4) DESIGN LOADINGS:
   - A. AXLE LOAD: HS–20 w/IMPACT
   - B. WHEEL LOAD: 16 Kips
   - C. SOIL WEIGHT WET: 120 Pcf.
   - D. EQUIVALENT SOIL FLUID PRESSURE: DRY SOIL = 40 Pcf. SATURATED SOIL = 80 Pcf.
   - E. LATERAL LIVE LOAD SURCHARGE (FROM GRADE TO 8.0 FT.): 80 Psf.
   - F. SOIL COVER: MIN. = 0 FT. MAX. = 2 FT.
   - G. ASSUMED WATER TABLE AT DEPTH OF: 3 FT.

BILL OF MATERIALS

QTY	DESCRIPTION/TYPE
1	12"ø PLASTIC SUMP
1	PLASTIC COATED PULL IRON
12	1/2" PLASTIC INSERTS
2	BONDING RIBBON
8	#2 MB LIFTERS @ 90°
–	–
–	–
–	–
–	–
–	–
–	–
–	–
–	–
–	–

PRODUCT WEIGHTS/YD.^{3}

ROOF SLAB	–#	–yd^3
TOP	3,100#	.766yd^3
EXTENSION1	–#	–yd^3
EXTENSION2	–#	–yd^3
BOTTOM	4,950#	1.222yd^3
FLOOR SLAB	–#	–yd^3
TOTALS:	8,050#	1.988yd^3

MANHOLE
3'-0" x 5'-0" x 4'-0"
-
-

CONTROL#: C.N.	PROJECT#: P.N.
DRAWN BY: SR	ORDER#: S.O.
DATE: 03/30/09	SOLD BY: S.B.
REVISIONS: –	SCALE: 3/8" = 1'
CHECKED BY:	DATE:
DWG NAME: –	PAGE 1 OF 3

THIS DRAWING IS THE PROPERTY OF OLDCASTLE PRECAST. IT IS SUBMITTED FOR REFERENCE PURPOSES ONLY AND SHALL NOT BE USED IN ANY WAY INJURIOUS TO THE INTERESTS OF SAID COMPANY.

Oldcastle® Precast, Inc.
1100 HERITAGE PKWY.
MANSFIELD, TX 76063
PHONE: (817) 453–1054
FAX: (817) 453–4007

STATE OF TEXAS — CHARLE BARTHELL MORAN, 101189, LICENSED, PROFESSIONAL ENGINEER

Signature of Registrant ,P.E. Date 3-25-14

FIRM REGISTRATION NUMBER: 312

NO.	REVISION	BY	DATE

TOWN OF ADDISON
DALLAS COUNTY, TEXAS

BELT LINE ROAD
UNDERGROUND ELECTRICAL

TIME WARNER CABLE DETAILS

HALFF
1201 NORTH BOWSER ROAD, RICHARDSON, TEXAS 75081-2275
TEL (214) 346-6200 FAX (214) 739-0095

PROJECT	DESIGN	DRAWN	DATE	FILE	SHEET
29350	HALFF	HALFF	MAR. 2014	29350 TEL 07G	TEL-7G

USER: ah1299 OFFICE: RCH PROJECT # 29350 FILE: 29350 TEL 07G.dgn TIME: 3:01:50 PM DATE: 3/25/2014