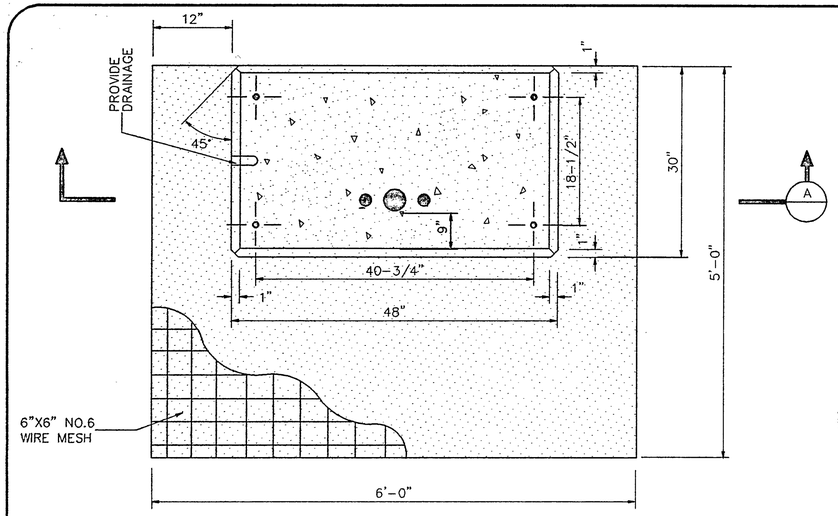

TOP VIEW

CONTROLLER FOUNDATION DETAIL 1

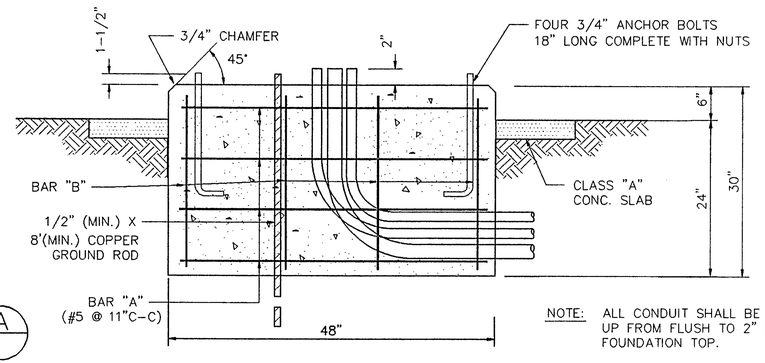

ELEVATION

SECTION A

NOTE: ALL CONDUIT SHALL BE STUBBED UP FROM FLUSH TO 2" MAX. ABOVE FOUNDATION TOP.

FOUNDATION DESIGN TABLE

FDN. TYPE	DRILLED SHAFT DIA.	REINFORCING STEEL: VERT. BARS	REINFORCING STEEL: SPIRAL & PITCH	DRILLED SHAFT LENGTH – feet (4),(5) (6) TEXAS CONE PENETROMETER, N blows/ft: 10	15	40	ANCHOR BOLT DESIGN (1): ANCHOR BOLT DIA.	Fy (ksi)	BOLT CIRCLE DIA.	ANCHOR TYPE	FOUNDATION DESIGN LOAD (2): MOMENT K-ft	SHEAR Kips	TYPICAL APPLICATION
24-A	24"	4-#5	#2at12"	5.7	5.3	4.5	3/4"	36	12-3/4"	1	10	1	PEDESTAL POLE, PEDESTAL MOUNTED CONTROLLER.
30-A	30"	8-#7	#3at9"	11.3	10.3	8.0	1-1/2"	55	17"	2	87	3	MAST ARM ASSEMBLY (SEE SELECTION TABLE)
30-B	30"	8-#9	#3at9"	13.2	11.9	9.0	1-3/4"	55	19"	2	131	5	MAST ARM ASSEMBLY (SEE SELECTION TABLE) 30' STRAIN POLE WITH OR WITHOUT LUMINAIRE.
36-A	36"	12-#9	#3at9"	15.2	13.6	10.4	2"	55	21"	2	190	7	MAST ARM ASSEMBLY (SEE SELECTION TABLE) STRAIN POLE TALLER THAN 30' & STRAIN POLE WITH MAST ARM.

FOUNDATION SELECTION TABLE FOR STANDARD MAST ARM ASSEMBLIES

		FDN 30-A	FDN 30-B	FDN 36-A
80 MPH DESIGN WIND SPEED	MAXIMUM SINGLE ARM LENGTH	36'	48'	
	MAXIMUM DOUBLE ARM LENGTH COMBINATIONS	24' x 24'		
		28' x 28'		
		32' x 28'	32' x 32'	
			36' x 36'	
			40' x 36'	
			44' x 28'	44' x 36'
100 MPH DESIGN WIND SPEED	MAXIMUM SINGLE ARM LENGTH	24'	36'	44'
	MAXIMUM DOUBLE ARM LENGTH COMBINATIONS		24' x 24'	
			28' x 28'	
			32' x 24'	32' x 32'
				36' x 36'
				40' x 36'
				44' x 36'

EXAMPLES :

(1) FOR 80MPH DESIGN WIND SPEED, FOUNDATION 30-A CAN SUPPORT UP TO A 32' ARM WITH ANOTHER ARM UP TO 28'.

(2) FOR 100MPH DESIGN WIND SPEED, FOUNDATION 30-B CAN SUPPORT A SINGLE 36' MAST ARM.

FOUNDATION SUMMARY TABLE (3)

LOCATION / IDENTIFICATION	AVG. N blows/ft	FDN TYPE	NO. (ea.)		DRILLED SHAFT LENGTH (6) (FEET): 24-A	30-A	30-B	36-A			
TOTAL DRILLED SHAFT LENGTHS											

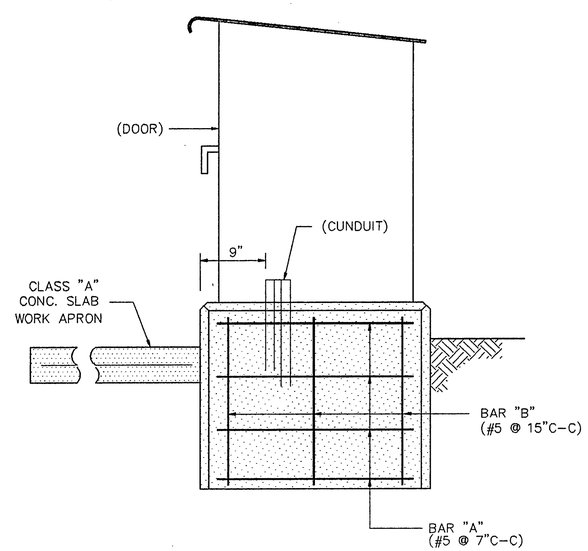

SIDE VIEW

GENERAL NOTES :

DESIGN CONFORMS TO 1975 AASHTO STANDARD SPECIFICATIONS FOR STRUCTURAL SUPPORTS FOR HIGHWAY SIGNS, LUMINAIRES AND TRAFFIC SIGNALS AND INTERIM REVISIONS THERETO.

REINFORCING STEEL SHALL CONFORM TO ITEM 440.

CONCRETE SHALL BE CLASS C.

THREADS FOR ANCHORE BOLTS AND NUTS SHALL BE ROLLED OR CUT THREADS OF UNIFIED NATIONAL COARSE THREAD SERIES EXCEPT FOR A19387 BOLTS WHICH SHALL HAVE 8 PITCH THREAD SERIES. BOLTS AND NUTS SHALL HAVE CLASS 2A AND 2B FIT TOLERANCES. GALVANIZED NUTS SHALL BE TAPPED AFTER GALVANIZING.

ANCHOR BOLTS THAT ARE 1" IN DIAMETER OR LESS SHALL CONFORM TO ASTM A36. ANCHOR BOLTS LARGER THAN 1" IN DIAMETER SHALL CONFORM TO SPECIAL SPECIFICATION A36M55 OR ASTM A19387 OR A687. GALVANIZE OR COAT WITH ZINC-RICH PAINT A MINIMUM OF THE UPPER 14 INCHES OF ALL ANCHORE BOLTS UNLESS OTHERWISE NOTED. NUTS FOR ANCHOR BOLTS SHALL CONFORM TO ASTM A563 Gr A OR BETTER HEAVY HEX. EXPOSED NUTS SHALL BE GALVANIZED OR COATED WITH ZINC-RICH PAINT. WASHERS SHALL BE GALVANIZED. TEMPLATES AND EMBEDED NUTS NEED NOT BE GALVANIZED.

THESE PLANS HAVE BEEN REVISED TO CONFORM WITH CONSTRUCTION RECORDS
APPROVED Tom Simmerly
DATE 10-20-92

REVISIONS

NO.	DESCRIPTION	DATE	BY

DUNAWAY ASSOCIATES, INC.

DeShazo, Starek, & Tang, Inc.
ENGINEERS • PLANNERS
330 Union Station
Dallas, Texas 75202-4802
(214) 748-6740
Fax: (214) 748-7037

DESIGN BY:	BDJ	DATE:	2-14-92
DRAWN BY:	SAM	DATE:	2-14-92
CHECKED BY:	BDJ	DATE:	2-14-92
APPROVED BY:		DATE:	

STATE OF TEXAS — BRIAN D. JAMES — 70477 — REGISTERED PROFESSIONAL ENGINEER — 5-5-92

FOUNDATION SUMMARY

Scale : NONE