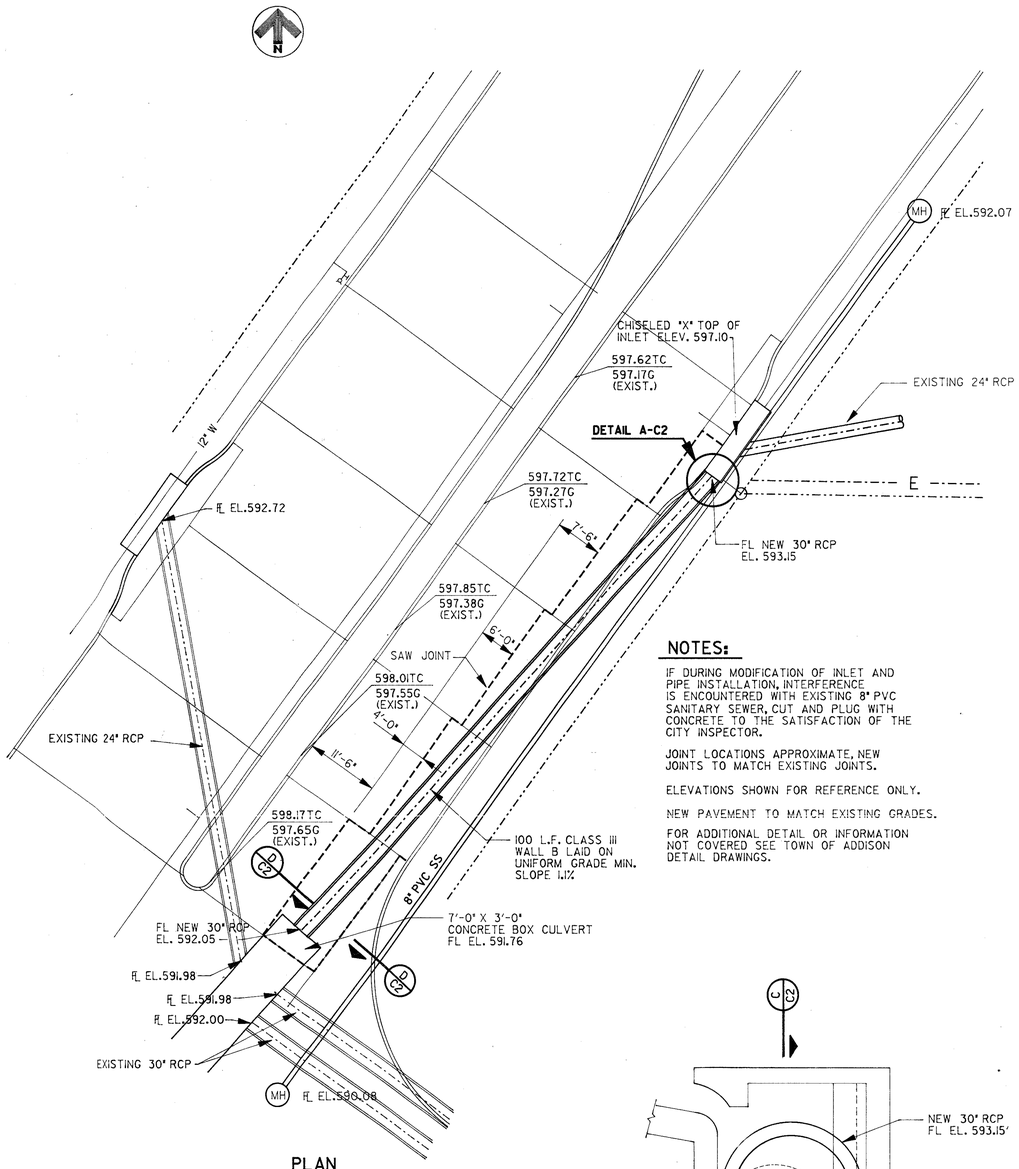

PLAN

SCALE: 1"=10'

NOTES:

IF DURING MODIFICATION OF INLET AND PIPE INSTALLATION, INTERFERENCE IS ENCOUNTERED WITH EXISTING 8" PVC SANITARY SEWER, CUT AND PLUG WITH CONCRETE TO THE SATISFACTION OF THE CITY INSPECTOR.

JOINT LOCATIONS APPROXIMATE, NEW JOINTS TO MATCH EXISTING JOINTS.

ELEVATIONS SHOWN FOR REFERENCE ONLY.

NEW PAVEMENT TO MATCH EXISTING GRADES.

FOR ADDITIONAL DETAIL OR INFORMATION NOT COVERED SEE TOWN OF ADDISON DETAIL DRAWINGS.

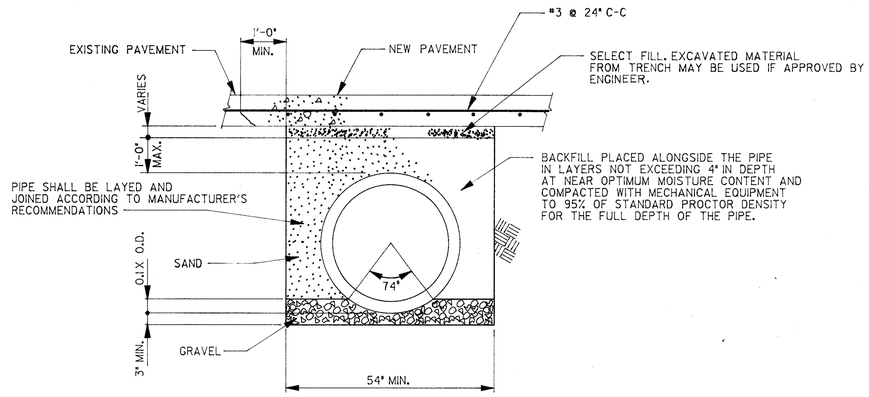

TRENCH DETAIL

SCALE: 3/4" = 1'-0"

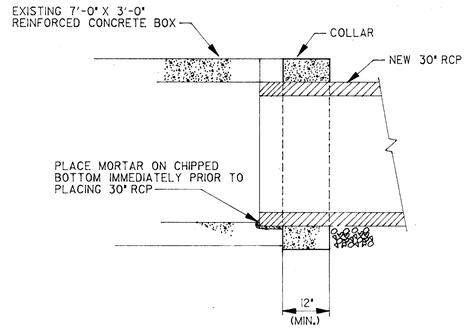

SECTION

E/C2

SCALE: 3/4" = 1'-0"

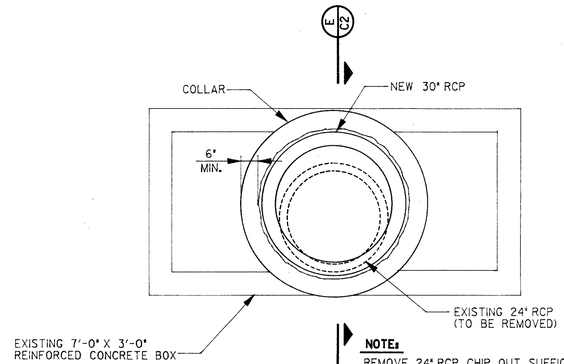

NOTE:

REMOVE 24" RCP, CHIP OUT SUFFICIENT CONCRETE TO ACCEPT 30" RCP (CHIP CONCRETE FROM BOTTOM RATHER THAN TOP) CUT REBAR BACK TO 2" FROM NEW 30" RCP. POUR CONCRETE COLLAR EXTENDING 6" MINIMUM PAST EDGE OF CHIPPED CONCRETE. VIBRATE SUFFICIENTLY TO FILL ALL VOIDS.

SECTION

D/C2

SCALE: 3/4" = 1'-0"

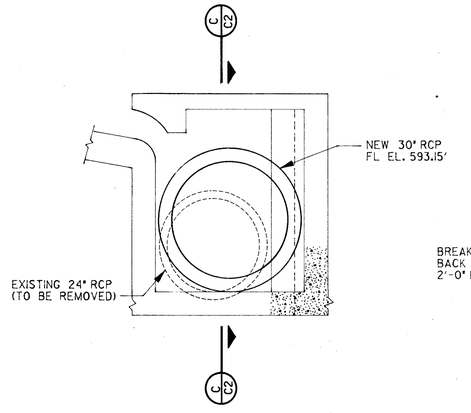

SECTION @ CULVERT

B/C2

SCALE: 3/4" = 1'-0"

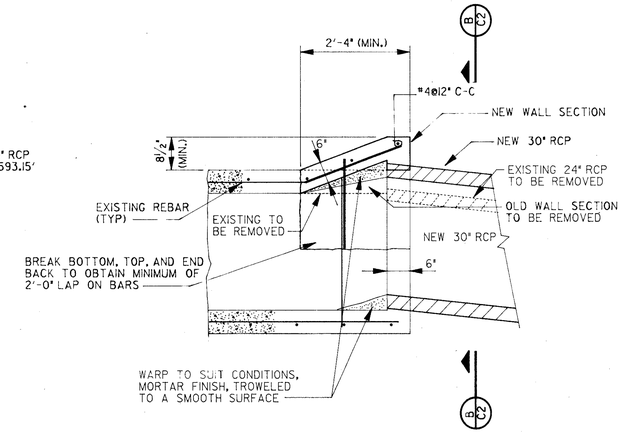

DETAIL @ CULVERT

A/C2

SCALE: 3/4" = 1'-0"

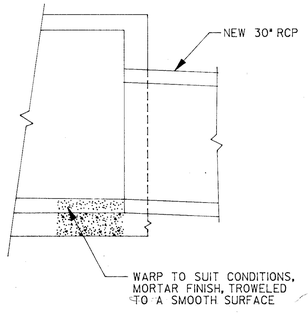

SECTION

C/C2

SCALE: 3/4" = 1'-0"

SHEET NO.	
BASE	
COMPOSITE CLASSME	

ADDISON RECREATION CENTER

3900 BELTWAY DRIVE
ADDISON, TEXAS

ADDISON

The Benham Group Dallas

architects
engineers
planners

dallas, texas

11-25-86

sheet title

INLET EXTENSION & PIPE REPLACEMENT

drawn J. MORROW
chk'd D. BLACK
date 11-25-86

revisions

no.	date