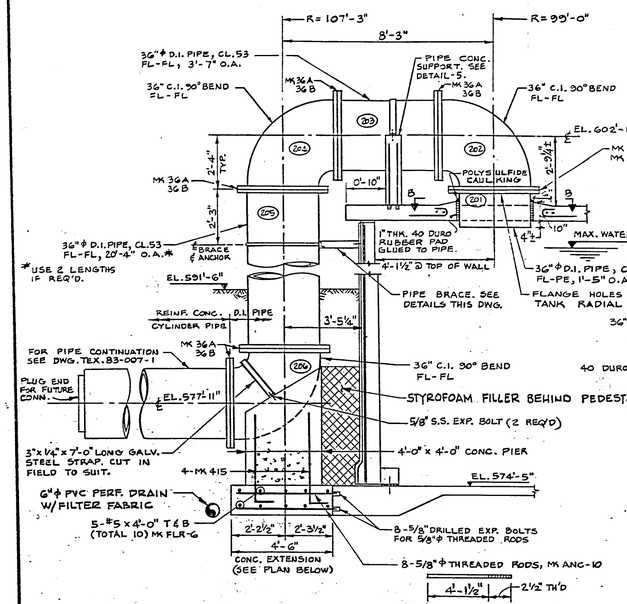

36"ϕ INLET PIPE DETAIL

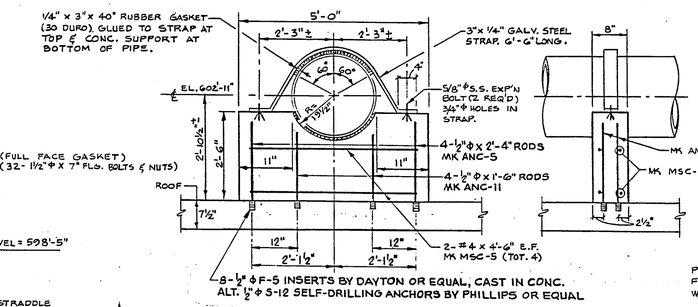

DETAIL 5

(PIPE CONCRETE SUPPORT ON ROOF)

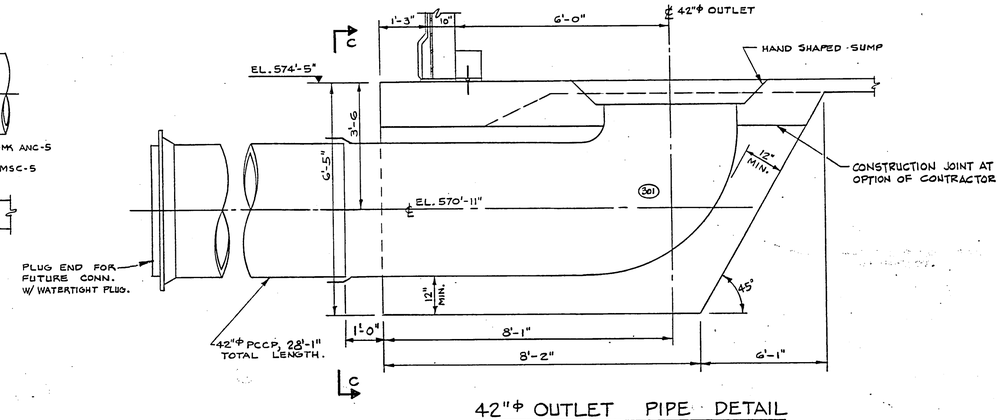

42"ϕ OUTLET PIPE DETAIL

(2 - REQUIRED)

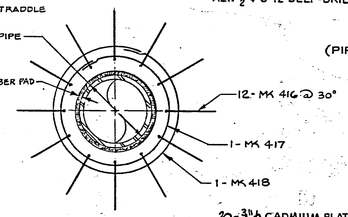

SECTION B-B

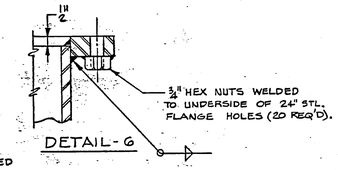

DETAIL-6

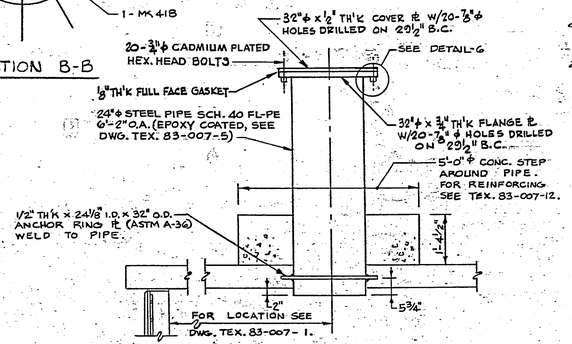

SONIC LEVEL TRANSMITTER DETAIL

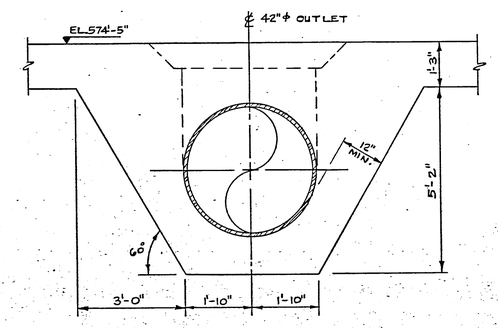

SECTION C-C

NOTE:

1. FOR D.I. PIPING NOTES INCLUDING EPOXY COATING SEE DWG. TEX. 83-007-5.

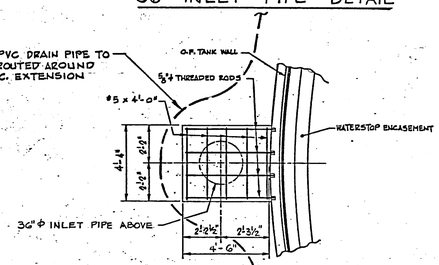

PLAN - CONCRETE EXTENSION

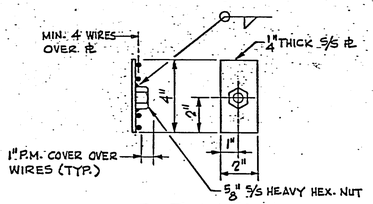

DETAIL 4

(2 REQ'D)

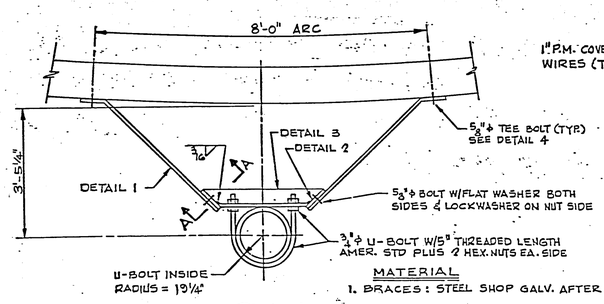

PLAN

MATERIAL

1. BRACES: STEEL SHOP GALV. AFTER FABRICATION
2. HARDWARE: STAINLESS STEEL

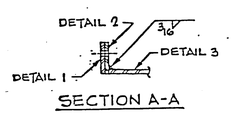

SECTION A-A

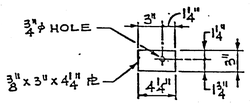

DETAIL 2

(2 REQ'D)

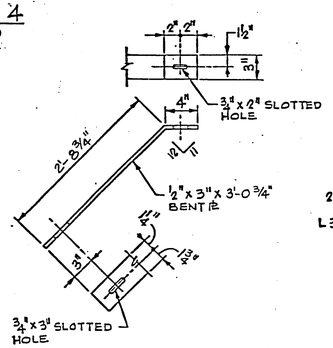

DETAIL 1

(2 REQ'D)
1- AS SHOWN
1- OPP. HAND

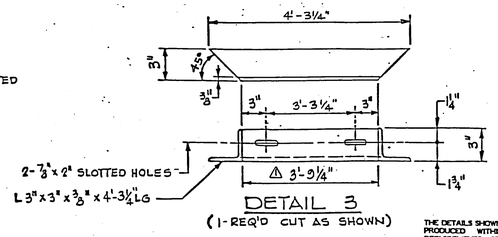

DETAIL 3

(1-REQ'D CUT AS SHOWN)

THE DETAILS SHOWN ON THIS DRAWING SHALL BE PRODUCED WITHIN THE GUIDELINES AND REQUIREMENTS SPECIFIED IN PRELOAD CO. "CONSTRUCTION SPECIFICATIONS & PROCEDURES" NO. "CS-203".

REVISIONS				
NO.	DATE	DESCRIPTION	BY	CKD
1	5/13/86	REV. INLET PIPE DET., SONIC LEVEL TRANS. DET., PLAN-CONC. EXT., DET.'S 3, 5 & 6	E	RAO
2	5/28/86	PER ENGINEERS COMMENTS	JD	RAO
3	6/27/86	REVISED AS SHOWN	PV	RAO
4	7/17/86	DETAIL 5 AS SHOWN	PV	RAO
A	6/12/87	AS BUILT	E	

PRELOAD

839 STEWART AVENUE, GARDEN CITY, NEW YORK, 11530

THIS DRAWING IS THE PROPERTY OF THE PRELOAD COMPANY, INC.® AND/OR PRELOAD TECHNOLOGY, INC.® AND IS SUBJECT TO RETURN ON DEMAND. IT CONTAINS FEATURES OF DESIGN WHICH ARE FULLY COVERED BY PATENTS AND, PATENTS PENDING AND COPYRIGHTS. IT IS SUBMITTED FOR USE ONLY IN CONNECTION WITH PROPOSALS OR CONTRACTS OF PRELOAD OR ITS LICENSEES, UPON THE EXPRESS CONDITION THAT IT MAY NOT BE USED ON ANY OTHER DIFFERENT PROJECTS WITHOUT PRIOR APPROVAL OF PRELOAD.

ONE 6.0 M.G. WATER STORAGE TANK

ADDISON, TEXAS

INLET & OUTLET PIPE DETAILS

DRAWN: JD	SCALE: NONE	CONTRACT NUMBER:	86 PE 004
DESIGNED: FD	APPROVED:		
CHECKED: RAO	DATE: 4-24-86	DRAWING NUMBER:	TEX. 83-007-6