DWG No. AC2-0003

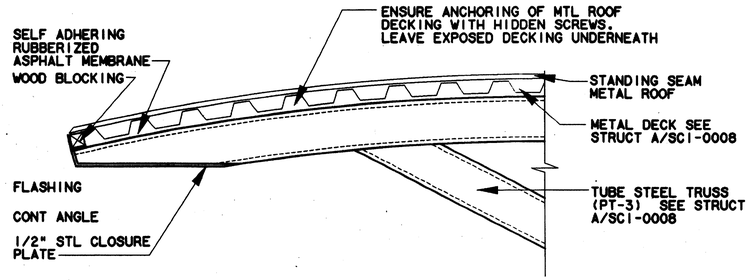


• SEE SECTION A SHEET SCI-0008

## CANOPY DETAIL (1)
SCALE: 1 1/2"=1'-0"
AC2-0001

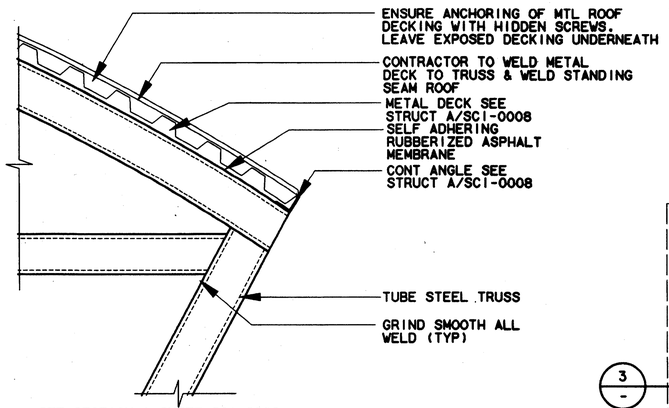


• SEE SECTION A SHEET SCI-0008

## CANOPY DETAIL (4)
SCALE: 1 1/2"=1'-0"
AC2-0001

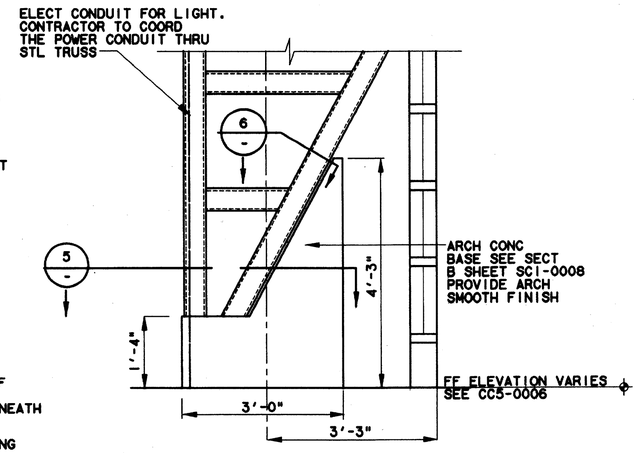


## CANOPY BASE DETAIL (2)
SCALE: 3/4"=1'-0"
AC2-0001

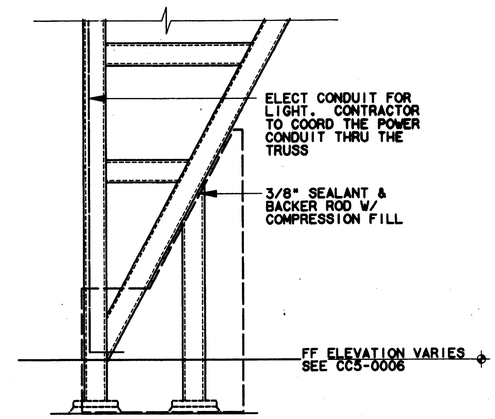


## CANOPY BASE SECTION (3)
SCALE: 3/4"=1'-0"

NOTES:

1. PROVIDE SELF ADHERING RUBBERIZED ASPHALT MEMBRANE (SELF SEALING) AT ALL ROOF AREAS OF 3" IN 12" OR LESS AND CONTINUOUS AT WALLS, PARAPETS, AND CANOPY EDGES. LAP MEMBRANE UP AND TERMINATE IN FLASHING REGLET. LAP EDGE OF MEMBRANE OVER FELT UNDERLAYMENT 4" MIN.

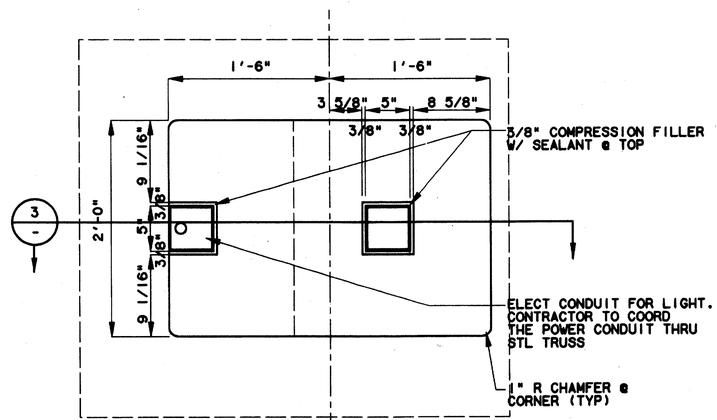


## CANOPY BASE PLAN (5)
SCALE: 1"=1'-0"

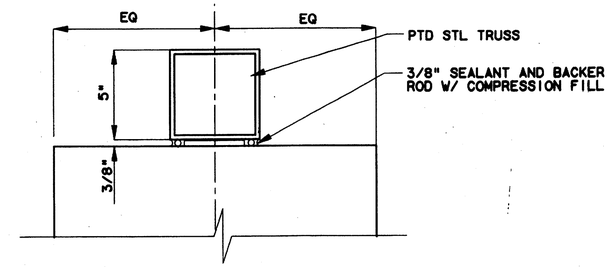


## TRUSS DETAIL (6)
SCALE: 3/4"=1'-0"

Record (As-built) Certification

"Having checked this submission, we certify that it conforms to the requirements of the contract in all respects except as otherwise indicated."

Contract Number: 97000136
Company Name: LANCO
Officer of Firm Signature:
Date:
Officer of Firm Name (typed): TOM KADER
Title of Officer (typed): PRESIDENT

Seal of Professional Engineer of Construction Contractor, including signature and date, thereby stating record (as-built) drawings for accuracy of as-built condition reflected herein, must be placed below.

7-7-99

**CONFORMED**

CONTRACT SHEET No. 55 OF 95

| REV | DATE | DESCRIPTION | BY | ENG | CHK | APP | REV | DATE | DESCRIPTION | BY | ENG | CHK | APP |
|---|---|---|---|---|---|---|---|---|---|---|---|---|---|
| △ | | | | | | | △ | | | | | | |
| △ | | | | | | | △ | | | | | | |
| △ | | | | | | | △ | | | | | | |
| △ | | | | | | | △ | | | | | | |
| △ | | | | | | | △ | | | | | | |
| △ | | | | | | | △ | | | | | | |

Lockwood, Andrews & Newnam, Inc.
A SUBSIDIARY OF LEO A DALY

WENDY LOPEZ & ASSOCIATES, INC.
ENGINEERING • SURVEYING • CONSTRUCTION SERVICES
1825 MARKET CENTER BLVD - SUITE 370
DALLAS, TEXAS 75207
(214) 741-7777

DART PROJECT

DART

| | |
|---|---|
| SCALE | AS NOTED |
| DRAWN | K. DEAN |
| DESIGNED | N. INFANZON/K. DEAN |
| CHECKED | N. INFANZON/RON BOLTON |
| IN CHARGE | V. STEVENS |
| DATE | 14 AUGUST 97 |

CAES

ADDISON TRANSIT CENTER

CANOPY DETAILS

CONTRACT C-97000136 | DWG No. AC2-0003 | REV 0