DWG No. AC9-0001

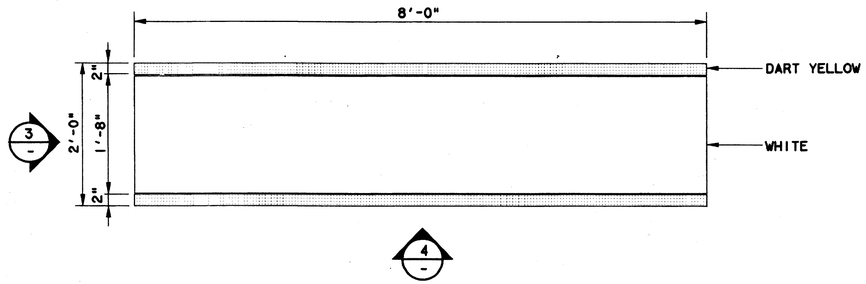

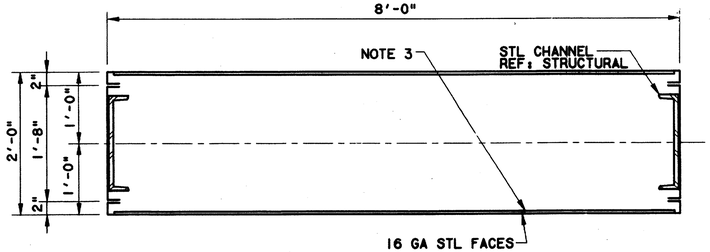

PLAN 1
SCALE: 1"=1'-0"

PLAN SECTION 2
SCALE: 1"=1'-0"

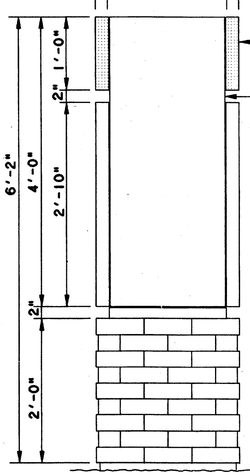

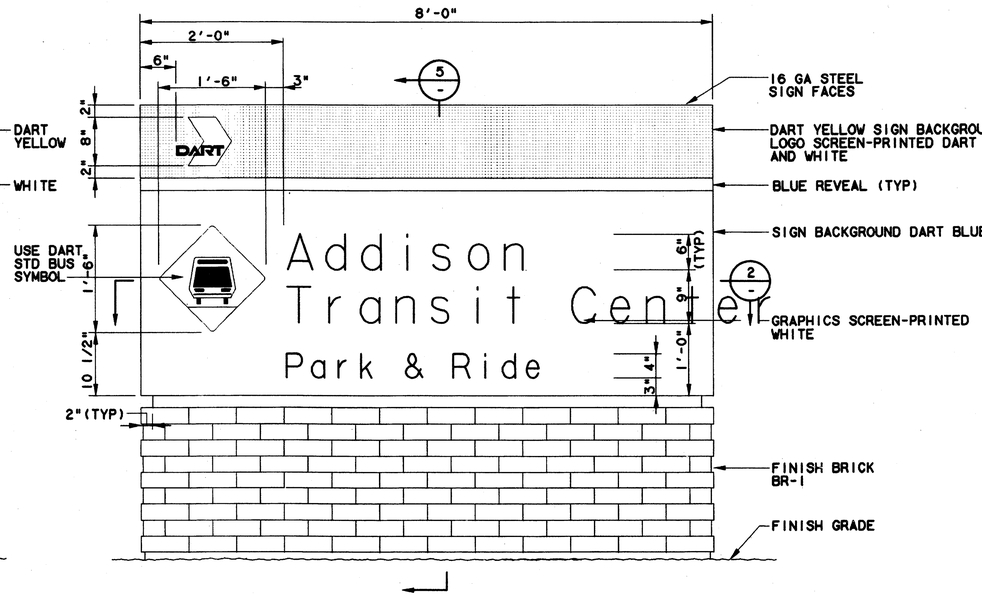

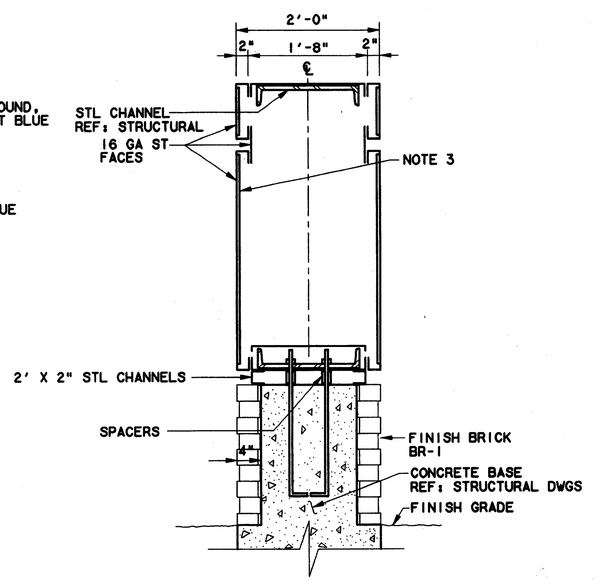

SIDE ELEVATION 3
SCALE: 1"=1'-0"

FRONT ELEVATION 4
SCALE: 1"=1'-0"

SECTION 5
SCALE: 1"=1'-0"

GENERAL NOTES

1. REFER TO DART SIGN STANDARDS MANUAL FOR CORRECT FONTS, SYMBOLS, STATION NAMES AND REPRODUCTION ART.
2. NOT USED
3. PROVIDE 1/2" EXTERIOR GYP BOARD AND 22 GAUGE SHEET METAL BACKUP AS PER SPECIFICATIONS. △1
4. SIGN IS DOUBLE FACE CONFIGURATION UNLESS OTHERWISE NOTED ON SITE-SPECIFIC SIGN

Record (As-built) Certification

"Having checked this submission, we certify that it conforms to the requirements of the contract in all respects except as otherwise indicated."

Contract Number: 97000136
Company Name: [illegible] CO
Officer of Firm Signature: [illegible]
Date:
Officer of Firm Name (typed): TOM KADER
Title of Officer (typed): PRESIDENT

Seal of Professional Engineer of Construction Contractor, including signature and date, thereby sealing record (as-built) drawing for accuracy of as-built condition reflected herein, must be placed below.

7-7-99

CONFORMED

CONTRACT SHEET No. 70 OF 95

REV	DATE	DESCRIPTION	BY	ENG	CHK	APP	REV	DATE	DESCRIPTION	BY	ENG	CHK	APP
△							△						
△							△						
△							△						
△							△						
△							△						
△							△						

8-14-97

Lockwood, Andrews & Newnam, Inc.
A SUBSIDIARY OF LEO A DALY

WENDY LOPEZ & ASSOCIATES, INC.
ENGINEERING • SURVEYING • CONSTRUCTION SERVICES
1825 MARKET CENTER BLVD - SUITE 510
DALLAS, TEXAS 75207
(214) 741-7777

DART PROJECT

DART

SCALE	1"=1'-0"
DRAWN	K. DEAN
DESIGNED	N. INFANZON/K. DEAN
CHECKED	N. INFANZON/RON BOLTON
IN CHARGE	V. STEVENS
DATE	14 AUGUST 97

CAES

ADDISON TRANSIT CENTER

SITE SIGNAGE & GRAPHICS

CONTRACT	DWG No.	REV
C-97000136	AC9-0001	0

PRF ROTATION=90.0000 Wed Aug 13 11:20:48 1997
Q:\BYERS\TABLES\lgdg\Q:\QUEUES\abtcdt15.prf
$$USERNAME$$
k:\wla0933\004\abtcbor1.008, 1-7,9,12-29,31-62
no ref logical, *no ref name*, *no ref levels*