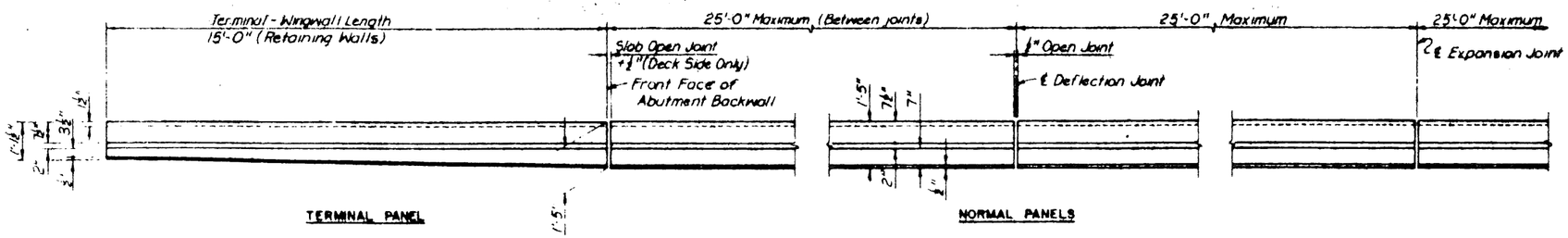

PLAN

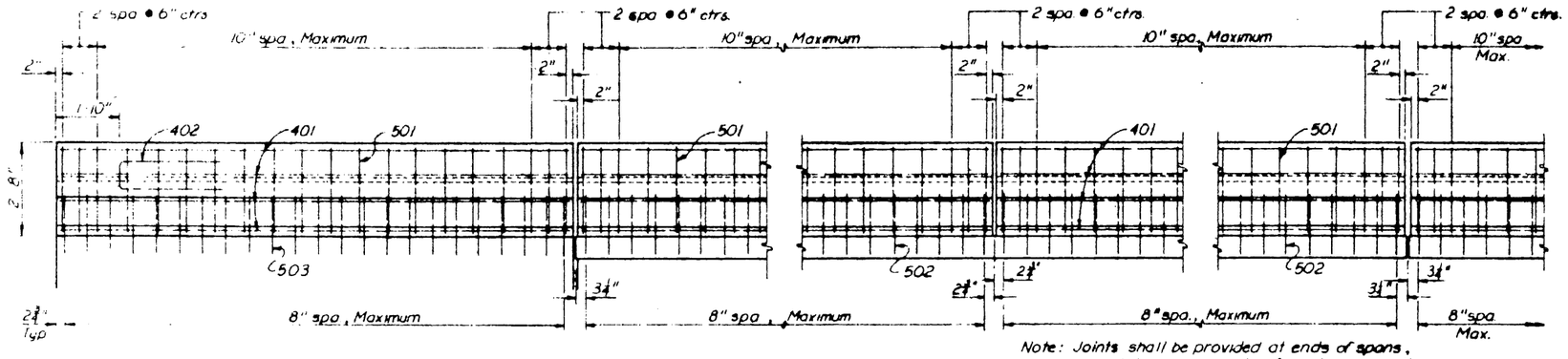

ELEVATION

Note: Joints shall be provided at ends of spans, over interior supports of continuous units, and at equal intervals in between as required to maintain 25'-0" maximum and 15'-0" minimum panel lengths. Joints over walls may be spaced at 30'-0" maximum centers.

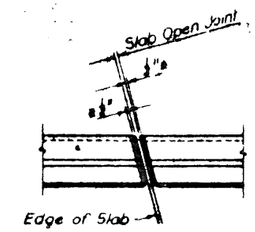

PLAN - TO 15° SKEW

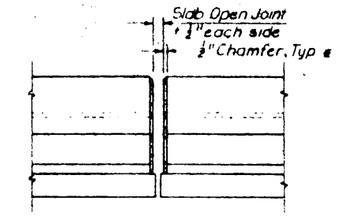

ELEVATION

EXPANSION JOINT DETAILS

℄ The traffic rail end setback dimension will be "0" inches at the low side of all Interstate 635 Interchange bridges where armor joints with turned-up premolded joint sealer is required. See Standard Drawing No 28

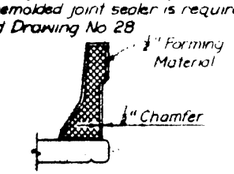

Note. Forming material such as sponge, molded cork granules, polystyrene, rubber sheet, etc., may be left in place if it is compressible and light in color.

DEFLECTION JOINT FORMING

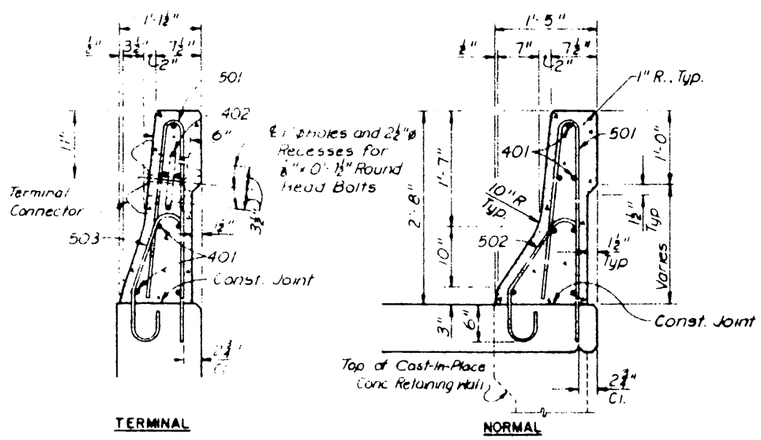

TERMINAL

NORMAL

SECTIONS

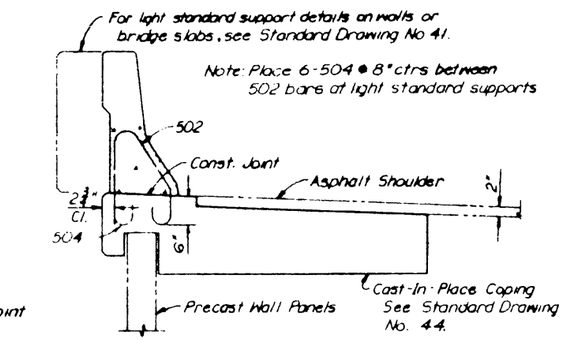

PRECAST WALL ANCHORAGE

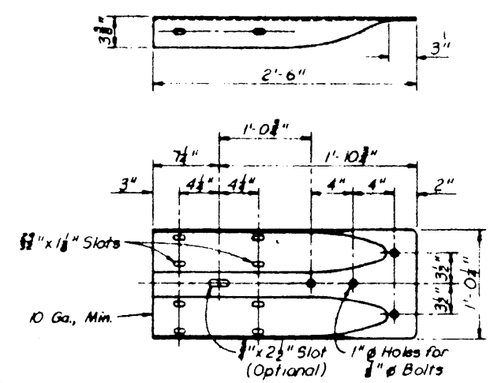

TERMINAL CONNECTOR DETAIL

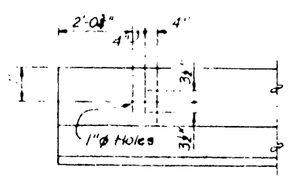

TERMINAL ELEVATION

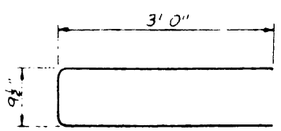

402

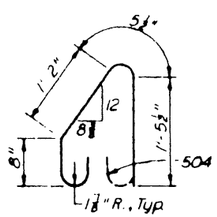

502 & 504

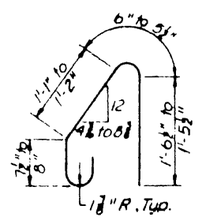

503

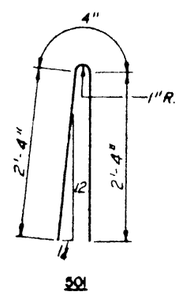

501

BAR BENDING DIAGRAMS

REINFORCING STEEL NOTES.

Bar dimensions are given out to out of bar. Radii are given to inside of bar.

Additional reinforcing may be tack welded to the upper two thirds of the required steel to provide bracing of the cage when slip-forming is used.

Reinforcing bar callouts consist of the bar size followed by an individual two digit number.

GENERAL NOTES:

Designed according to AASHTO 1977 Standard Specifications and Interim Specifications thru 1982.

All parts of the parapet barrier, including concrete, reinforcing steel, inserts, terminal connector, bolts, nuts, and washers, are included in the price bid per lineal foot of parapet barrier.

All concrete shall be Class C, all reinforcing steel shall be Grade 60, and all steel for terminal connectors shall be galvanized after fabrication. The gage of the terminal connector shall be at least equal to that of the approach metal beam guardfence.

Parapet barriers shall be vertical on both bridges and walls.

Shop drawings will not be required for this rail.

This railing may be constructed with slip-forms with equipment approved by the Engineer. Sensor control for both line and grade must be provided. When slip forming is used, the concrete may be cured with membrane curing compound.

NO	REVISION	BY	DATE

TEXAS TURNPIKE AUTHORITY

DALLAS NORTH TOLLWAY

CONCRETE TRAFFIC RAIL

TYPE. T5

HNTB — HERRIGER NICOLES TAMMEN & BARRANDOFF

SECTION VI

DRAWN JTK DATE 11 30 83 DESIGNED GDH DATE 11-30-83
CHECKED GDH DATE 9-12-84 SCALE NONE

STANDARD DRAWING NO 30

004160