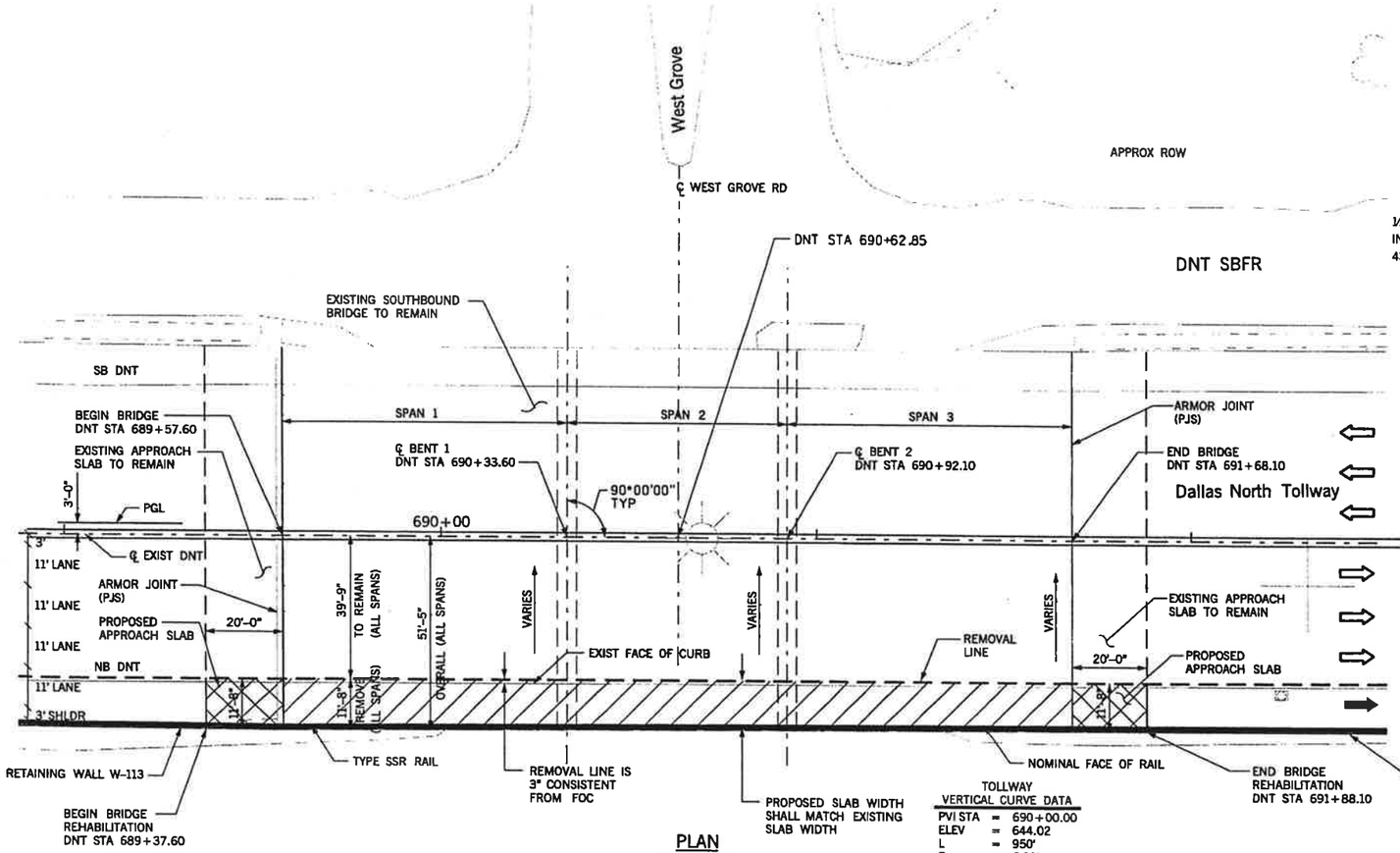

PLAN

SCALE: 1" = 40'

TOLLWAY VERTICAL CURVE DATA		
PVI STA	=	690+00.00
ELEV	=	644.02
L	=	950'
E	=	6.98'
K	=	161.56'

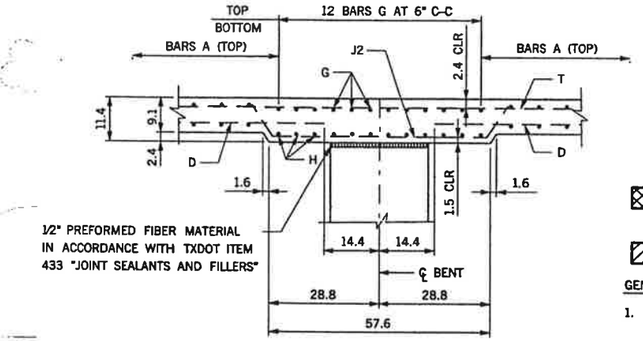

SLAB AT ℄ BENTS DETAIL

NTS

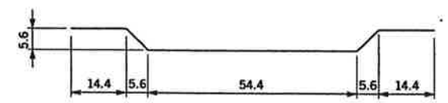

BAR J2

NTS

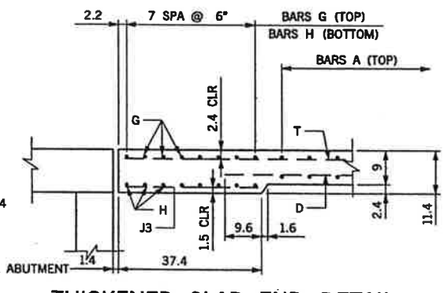

THICKENED SLAB END DETAIL

NTS

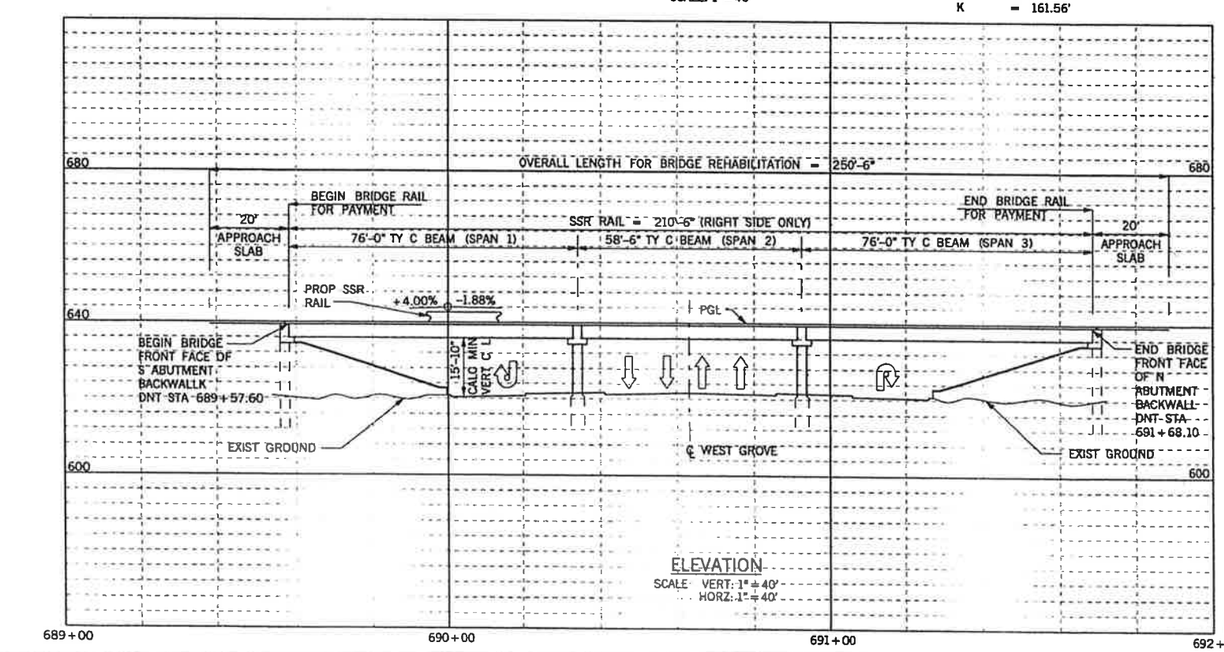

ELEVATION

SCALE VERT: 1" = 40'
HORZ: 1" = 40'

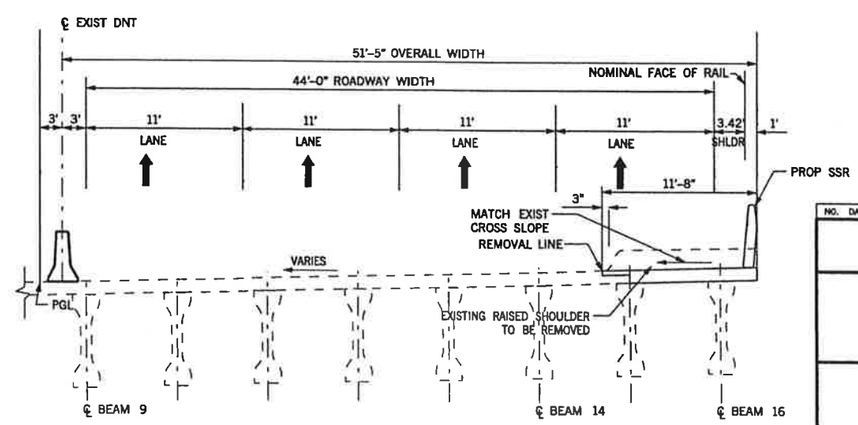

PROPOSED TYPICAL SECTION SPANS 1, 2 & 3

NTS

0 20 40 60 80

SCALE IN FEET

LEGEND

EXTEND EXISTING APPROACH SLAB

REMOVE AND REPLACE EXISTING BRIDGE DECK

GENERAL NOTES:

1. DESIGN ACCORDING TO AASHTO 2002 STANDARD AND CURRENT INTERIM SPECIFICATIONS.
2. CONCRETE STRENGTH f'c=4000 psi.
3. CHAMFER ALL EXPOSED EDGES 3/4" UNLESS OTHERWISE NOTED.
4. ALL REINFORCING STEEL SHALL BE GRADE 60.
5. HORIZONTAL DIMENSIONS ARE SHOWN AND LENGTHS MUST BE CORRECTED FOR GRADE OR CROSS SLOPE WHERE APPROPRIATE.
6. THE PROPOSED PLANS ARE BASED ON INFORMATION CONTAINED IN THE AS-BUILT PLANS. STATIONS, BEARINGS GRADES AND CERTAIN DIMENSIONS GIVEN ARE FROM ORIGINAL PLANS AND ARE FOR REFERENCE ONLY. IT IS THE RESPONSIBILITY OF THE CONTRACTOR TO VERIFY ACTUAL FIELD CONDITIONS. ANY MODIFICATIONS TO THE PROPOSED PLANS MUST BE APPROVED BY THE ENGINEER.
7. BAR LAPS WHERE REQUIRED SHALL BE AS FOLLOWS:
   UNCOATED: #4 = 1'-5"
   #5 = 1'-9"
8. THE CONTRACTOR MAY SPLICE EXISTING BRIDGE SLAB REBAR BY LAP SPLICING (SEE NOTE 5) OR USING MECHANICAL COUPLING DEVICES (IN ACCORDANCE WITH CURRENT SPECIAL PROVISION (440-005) TO ITEM 440, "REINFORCING STEEL") THE COUPLER SHALL DEVELOP IN TENSION AT LEAST 125% OF THE SPECIFIED YIELD STRENGTH OF THE REINFORCING BAR.
9. SEE RETAINING WALL DETAILS SHEET FOR ADDITIONAL INFORMATION.
10. SEE STANDARD BAS-94 (MOD) FOR ADDITIONAL APPROACH SLAB INFORMATION.
11. SEE TXDOT STANDARD AJ FOR ADDITIONAL ARMOR JOINT INFORMATION.
12. EXISTING ARMOR JOINTS AT ABUTMENTS SHALL BE CLEANED AND SEALED IN ACCORDANCE WITH ITEM 438 "CLEAN AND SEAL EXISTING JOINTS"

Frank H. Olshefski 9/27/05

STATE OF TEXAS
FRANK H. OLSHEFSKI
61292
PROFESSIONAL ENGINEER

NO.	DATE	REVISION	APPROV.

DALLAS NORTH TOLLWAY

NTTA
NORTH TEXAS TOLLWAY AUTHORITY

PARTIAL BRIDGE LAYOUT
DNT OVERPASS AT
WEST GROVE DRIVE

PATE ENGINEERS
10330 N.W. Freeway, Suite 200 Houston, Tx. Phone 713-462-3078

STM #7 & #8
PLAN SET A

DRAWN KMH	DATE 09-02-05	DESIGNED DD	DATE 09-02-05
CHECKED RR	DATE 09-02-05	SCALE 1" = 40'	

Sheet 1 of 4

CONTRACT NO. 02039-DNT-02-CN-EN A168 OF A247

PATE ENGINEERS 6:14:13 PM 9/27/2005 x:\130800100\sheets\LET7S8E-184.PLT

x:\130800100\sheets\bridge modification plans\d07bbp01.dgn

6:14:13 PM