THIS DRAWING PRODUCED ON THE SOUTHWEST REGION MICROSTATION SYSTEM

SPECIAL NOTES:

1. CIRCUIT BREAKER SHALL BE SOLID STATE TYPE WITH GROUND FAULT PROTECTION.
2. CONDUIT AND CONTROL WIRING PER MANUFACTURER'S WIRING DIAGRAMS.

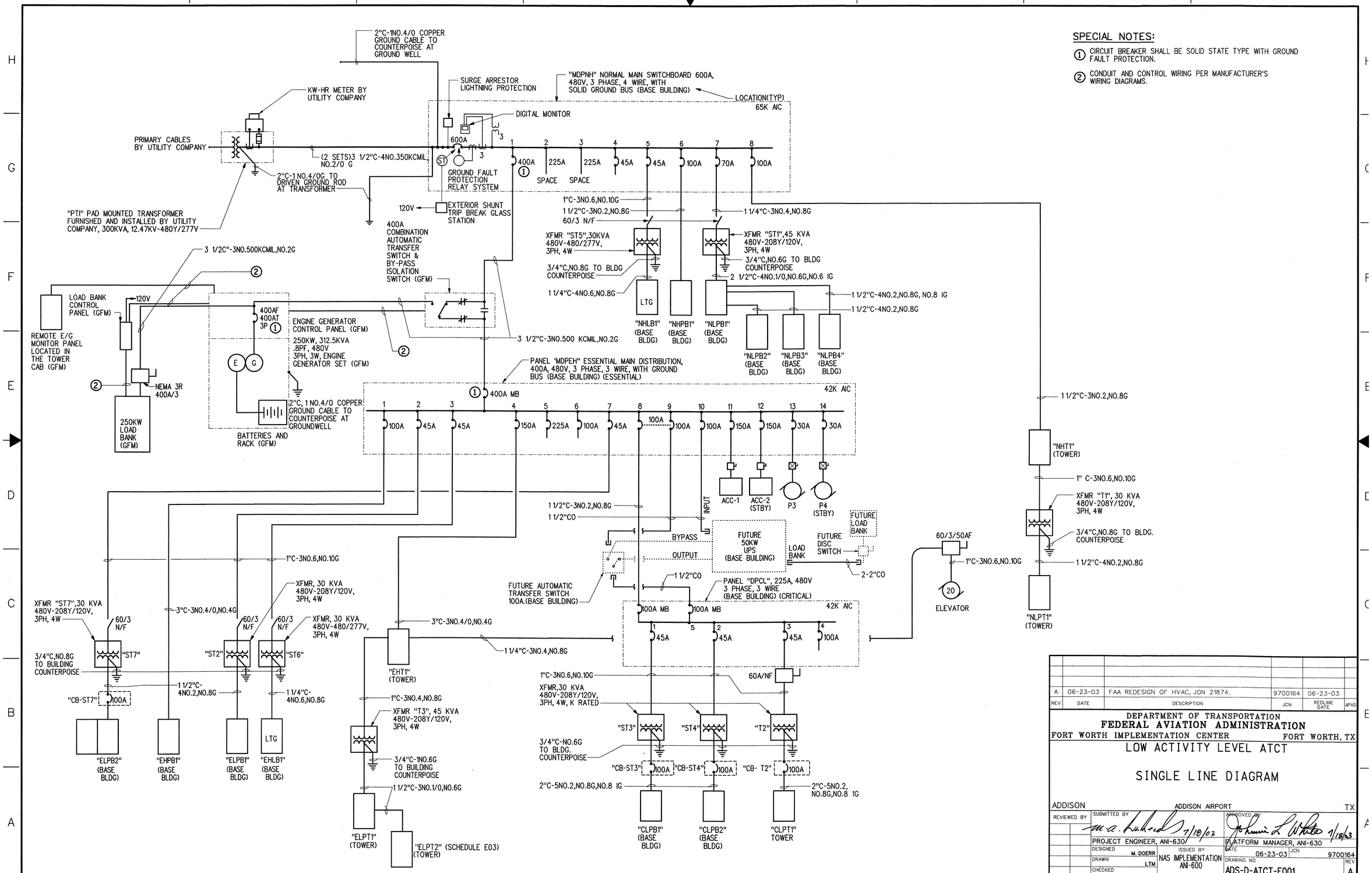

REV	DATE	DESCRIPTION	JCN	REDLINE DATE	APVD
A	06-23-03	FAA REDESIGN OF HVAC, JON 21874.	9700164	06-23-03	

DEPARTMENT OF TRANSPORTATION
FEDERAL AVIATION ADMINISTRATION
FORT WORTH IMPLEMENTATION CENTER — FORT WORTH, TX

LOW ACTIVITY LEVEL ATCT

SINGLE LINE DIAGRAM

ADDISON — ADDISON AIRPORT — TX

REVIEWED BY — SUBMITTED BY: M. A. Hubbard 7/18/03 — PROJECT ENGINEER, ANI-630

APPROVED BY: Johnnie L. White 7/18/03 — PLATFORM MANAGER, ANI-630

DESIGNED: M. DOERR
DRAWN: LTM
CHECKED:
ISSUED BY: NAS IMPLEMENTATION ANI-600
DATE: 06-23-03
JCN: 9700164
DRAWING NO: ADS-D-ATCT-E001
REV: A

m:\ads\atct\active\ads-d-atct-e001-a.dgn 07/17/2003 04:53:09 PM ksam