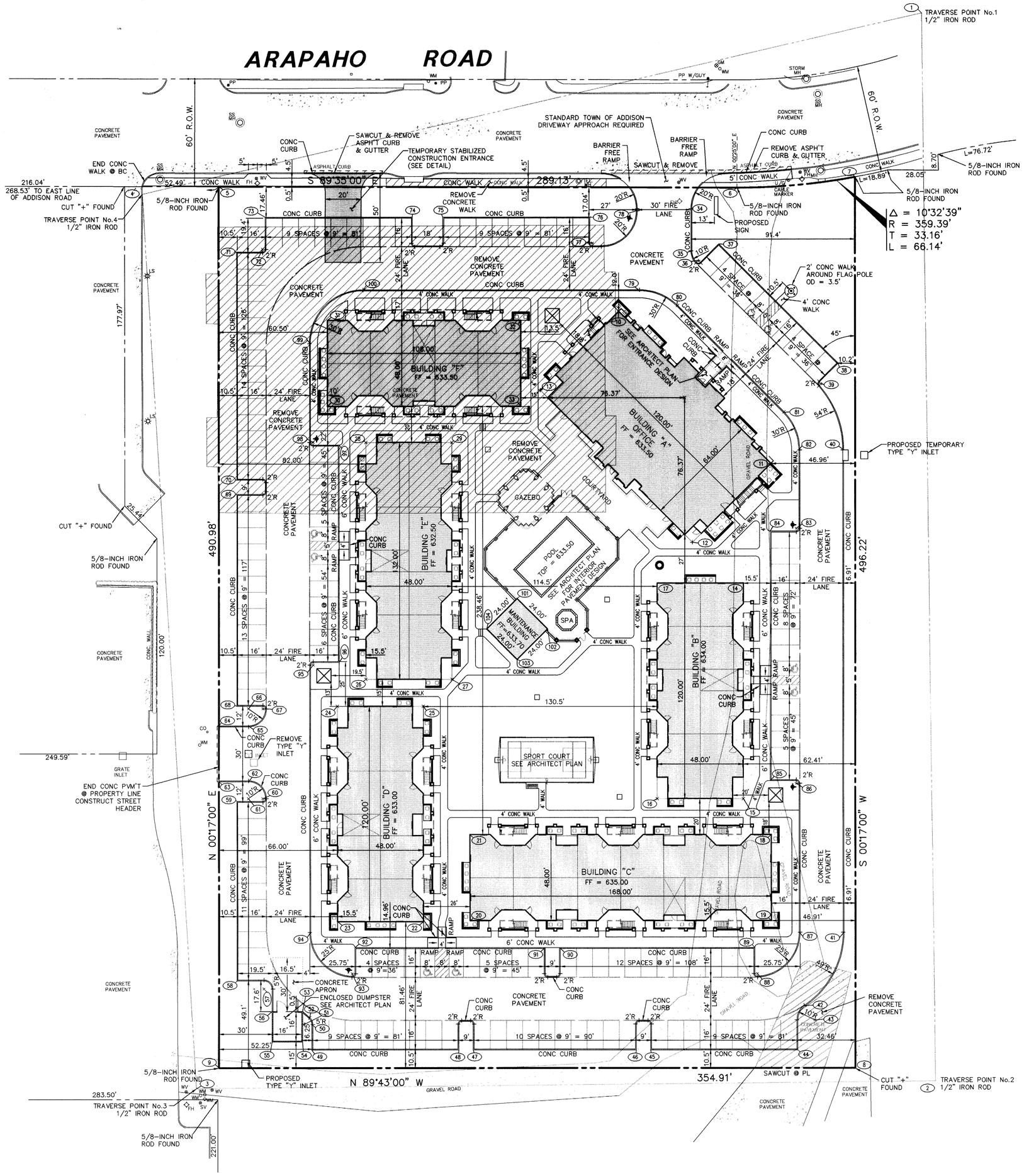

LEGEND

- FH — FIRE HYDRANT
- PP — POWER POLE
- LS — LIGHT STANDARD
- WM — WATER METER
- WV — WATER VALVE
- CO — CLEANOUT
- MH — MANHOLE
- GM — GAS METER
- PROPERTY LINE

GRAPHIC SCALE IN FEET (0, 15, 30, 60, 90)

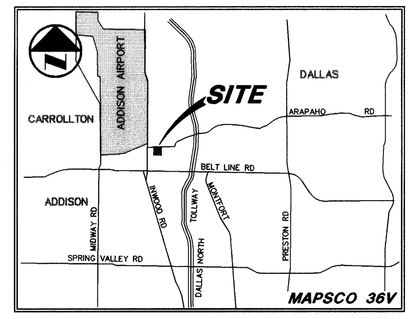

VICINITY MAP

COORDINATE LIST

POINT No.	NORTH	EAST	DESCRIPTION
1	1711.54	1578.31	TRAVERSE POINT No.1
2	1116.63	1582.99	TRAVERSE POINT No.2
3	1114.50	1170.83	TRAVERSE POINT No.3
4	1612.83	1143.28	TRAVERSE POINT No.4
5	1616.86	1185.90	PROPERTY CORNER
6	1614.75	1475.02	PC PROPERTY CORNER
7	1620.34	1540.83	PROPERTY CORNER
8	1124.13	1538.38	PROPERTY CORNER
9	1125.88	1183.47	PROPERTY CORNER
10	1546.22	1408.65	BUILDING CORNER "A"
11	1460.95	1493.08	BUILDING CORNER "A"
12	1417.33	1449.03	BUILDING CORNER "A"
13	1502.60	1364.60	BUILDING CORNER "A"
14	1394.43	1477.30	BUILDING CORNER "B"
15	1274.43	1476.71	BUILDING CORNER "B"
16	1274.67	1428.71	BUILDING CORNER "B"
17	1394.67	1429.31	BUILDING CORNER "B"
18	1254.35	1492.11	BUILDING CORNER "C"
19	1206.35	1491.67	BUILDING CORNER "C"
20	1207.19	1323.88	BUILDING CORNER "C"
21	1255.18	1324.11	BUILDING CORNER "C"
22	1206.78	1297.87	BUILDING CORNER "D"
23	1207.01	1249.87	BUILDING CORNER "D"
24	1327.01	1250.47	BUILDING CORNER "D"
25	1326.78	1298.47	BUILDING CORNER "D"
26	1341.93	1266.54	BUILDING CORNER "E"
27	1341.70	1314.54	BUILDING CORNER "E"
28	1473.84	1267.19	BUILDING CORNER "E"
29	1473.61	1315.19	BUILDING CORNER "E"
30	1494.04	1245.79	BUILDING CORNER "F"
31	1542.04	1246.03	BUILDING CORNER "F"
32	1541.50	1354.03	BUILDING CORNER "F"
33	1493.50	1353.79	BUILDING CORNER "F"
34	1603.21	1449.84	PT @ BC
35	1579.76	1449.72	PC @ BC
36	1574.29	1453.34	RADIUS POINT (2'R)
37	1583.42	1464.70	PI @ BC
38	1516.63	1530.13	PI @ BC
39	1505.27	1521.50	RADIUS POINT (2'R)
40	1468.33	1533.67	PT @ BC
41	1199.66	1532.34	PC @ BC
42	1158.87	1510.54	PRC @ BC
43	1151.00	1515.85	RADIUS POINT (10'R)
44	1134.29	1506.27	PI @ BC
45	1134.69	1424.27	PI @ BC
46	1134.73	1416.27	PI @ BC
47	1135.18	1325.27	PI @ BC
48	1135.22	1317.27	PI @ BC
49	1135.63	1235.27	PI @ BC
50	1149.85	1235.34	PC @ BC
51	1149.87	1230.84	RADIUS POINT (5'R)
52	1153.25	1233.81	PT @ BC
53	1157.15	1230.13	OUTSIDE CORNER DUMPSTER
54	1140.15	1230.04	OUTSIDE CORNER DUMPSTER
55	1140.24	1213.04	OUTSIDE CORNER DUMPSTER
56	1157.23	1213.13	OUTSIDE CORNER DUMPSTER & BC
57	1169.83	1208.69	RADIUS POINT (5'R)
58	1174.40	1193.71	PI @ BC
59	1274.40	1194.21	PI @ BC
60	1275.83	1208.71	RADIUS POINT (2'R)
61	1275.87	1200.71	RADIUS POINT (10'R)
62	1285.87	1200.76	PT @ BC
63	1285.45	1184.26	BC @ PL
64	1316.45	1184.41	BC @ PL
65	1316.37	1200.91	PC @ BC
66	1325.87	1200.96	RADIUS POINT (10'R)
67	1325.83	1208.96	RADIUS POINT (2'R)
68	1327.40	1194.47	PI @ BC
69	1445.40	1195.05	PI @ BC
70	1453.40	1195.09	PI @ BC
71	1580.40	1195.72	PI @ BC
72	1581.83	1210.23	RADIUS POINT (2'R)
73	1599.71	1211.82	PI @ BC
74	1599.30	1293.81	PI @ BC
75	1599.22	1310.81	PI @ BC
76	1598.81	1392.81	PI @ BC
77	1584.30	1394.24	RADIUS POINT (2'R)
78	1602.18	1418.83	PT @ BC
79	1557.68	1420.33	PC @ BC
80	1548.93	1441.15	PT @ BC
81	1489.36	1500.13	PC @ BC
82	1468.46	1508.67	PT @ BC
83	1424.78	1506.95	RADIUS POINT (2'R)
84	1423.35	1492.45	PI @ BC
85	1284.35	1491.76	PI @ BC
86	1282.78	1506.25	RADIUS POINT (2'R)
87	1199.78	1507.34	PC @ BC
88	1176.93	1483.98	RADIUS POINT (2'R)
89	1191.40	1482.55	PI @ BC
90	1191.94	1373.55	PI @ BC
91	1191.98	1365.55	PI @ BC
92	1192.51	1259.55	PI @ BC
93	1178.05	1257.98	RADIUS POINT (2'R)
94	1201.13	1234.84	PT @ BC
95	1350.08	1237.08	RADIUS POINT (2'R)
96	1351.51	1251.59	PI @ BC
97	1472.51	1252.19	PI @ BC
98	1474.08	1237.69	RADIUS POINT (2'R)
99	1529.08	1236.47	PC @ BC
100	1558.44	1266.11	PT @ BC
101	1386.52	1351.03	MAINTENANCE BUILDING CORNER
102	1369.48	1367.91	MAINTENANCE BUILDING CORNER
103	1352.60	1350.86	MAINTENANCE BUILDING CORNER
104	1369.64	1333.98	MAINTENANCE BUILDING CORNER

CAUTION!!!
GAS LINE IN AREA—CONTACT LONE STAR GAS 48 HOURS PRIOR TO CONSTRUCTION
PHONE:(214)263-3444

CONTACT:
MR ED KEAH, OPERATING SUPPORT SECTION DISTRIBUTION DEPARTMENT, 2 WORKING DAYS PRIOR TO EXCAVATING T.U. ELECTRIC FACILITIES.
PHONE:(214)698-7239 OR (214)698-7207

CAUTION!!
UNDERGROUND TELEPHONE IN AREA – CONTACT S.W.B.T. 48 HOURS PRIOR TO CONSTRUCTION
PHONE:(214)698-7239 (UNDERGROUND)
PHONE:(214)698-7240 (OVER-HEAD)

RECORD DRAWING

THIS DRAWING HAS BEEN REVISED TO REFLECT CONSTRUCTION RECORDS MAINTAINED AND PROVIDED BY THE CONTRACTOR FOR THIS PROJECT.

CONTRACTOR: UNLIMITED CONSTRUCTION, INC.
P.O. BOX 462213
DALLAS, TEXAS 75046-2213

DATE REVISED: 29 MARCH 1996

NOTE:
SEE DETAIL SHEET FOR GENERAL NOTES & DETAILS

NOTE:
ALL DIMENSIONS ARE FROM FACE OF CURB TO FACE OF CURB UNLESS NOTED OTHERWISE.

NOTE:
PRIOR TO ISSUANCE OF A CERTIFICATE OF OCCUPANCY AN INDEPENDENT ACOUSTICAL EXPERT PROVIDED BY THE OWNER SHALL CERTIFY THAT THIS PROJECT WAS CONSTRUCTED IN ACCORDANCE WITH THE PLANS AND THAT A NOISE LEVEL REDUCTION OF 30 dB IN ACHIEVED.

STATE OF TEXAS — JAMES A. KOCH, JR. — 62218 — REGISTERED PROFESSIONAL ENGINEER

⚠1 REV. 3/29/1996

PACHECO KOCH
Consulting Engineers, Inc.
Civil Engineering • Land Surveying
9401 LBJ Freeway, Suite 300
Dallas, Texas 75243
(214) 235-3031

DIMENSIONAL CONTROL & PAVING PLAN
SUMMERFIELD SUITES HOTEL
ARAPAHO ROAD
QUORUM CENTER ADDITION
TOWN OF ADDISON, TEXAS

DESIGN	DRAWN	DATE	SCALE	NOTES	FILE	NO.
JAK	BB	5/3/95	1"=30'			

PK NO: 1467-95.011 DWG NO: 1467-03A

PRINTS ISSUED

DATE	PURPOSE	NO.

FOR CONSTRUCTION:

REVISIONS

DATE	ITEM	NO.

LAW/KINGDON, INC.
ARCHITECTS & ENGINEERS
345 RIVERVIEW, WICHITA, KS 67203
Phone (316) 268-0230 Fax (316) 268-0205
Copyright © 1994

DRAWN		CHECKED	
BB		JAK	

RELATED DRAWINGS

SHELL	
DETAILS	
STRUCTURE	
MECHANICAL	
ELECTRICAL	
OTHER	

SEQUENCE NUMBER

OF ____ SHEETS

SUMMERFIELD SUITES® HOTEL

ADDISON, TEXAS

PROJECT NUMBER 94780

FF-6

DIMENSIONAL CONTROL PLAN

SHEET TITLE

SHEET NUMBER

C-1

1 OF 7 SHEETS

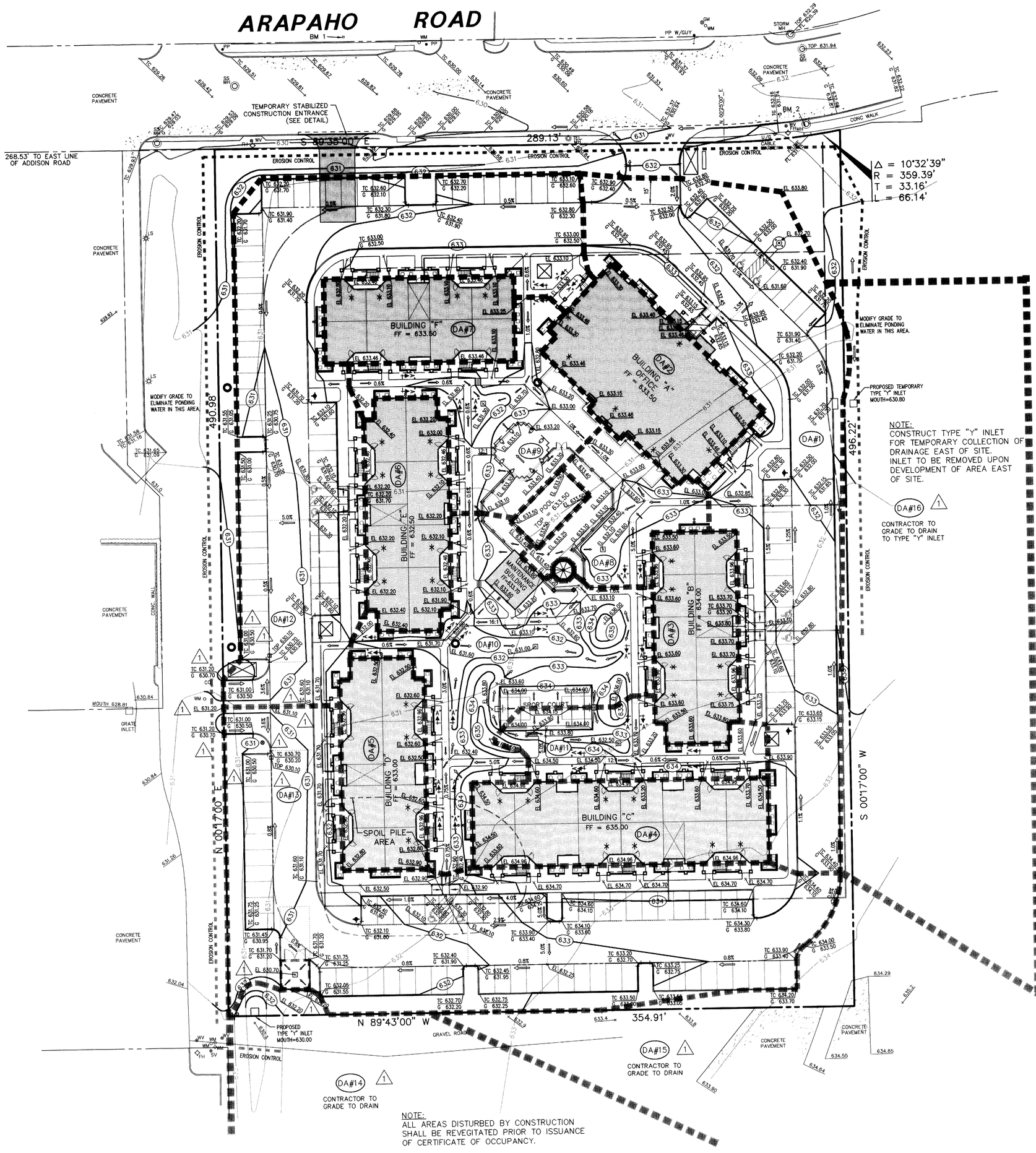

LEGEND

- FIRE HYDRANT
- POWER POLE
- LIGHT STANDARD
- WATER METER
- WATER VALVE
- CLEANOUT
- MANHOLE
- GAS METER
- PROPERTY LINE
- EXIST CONTOUR
- EXIST SPOT ELEVATION
- EXIST TOP OF CURB ELEVATION / EXIST GUTTER ELEVATION
- PROPOSED CONTOUR
- PROP TOP OF CURB ELEVATION / PROP GUTTER ELEVATION
- PROP SPOT ELEVATION
- PROP DRAINAGE FLOW DIRECTION
- PROP DRAINAGE DIVIDE
- PROP EROSION CONTROL
- HANDICAPPED ACCESSIBLE ENTRANCE

GRAPHIC SCALE IN FEET (0, 15, 30, 60, 90)

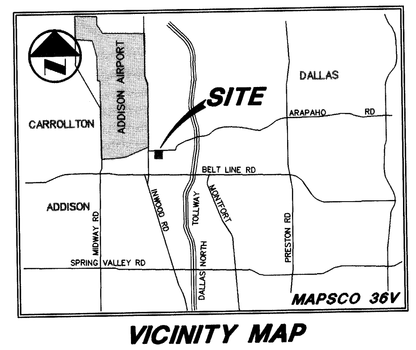

VICINITY MAP

CAUTION!!! GAS LINE IN AREA—CONTACT LONE STAR GAS 48 HOURS PRIOR TO CONSTRUCTION PHONE:(214)263-3444

CONTACT: MR ED KEAH, OPERATING SUPPORT SECTION DISTRIBUTION DEPARTMENT, 2 WORKING DAYS PRIOR TO EXCAVATING T.U. ELECTRIC FACILITIES. PHONE:(214)698-7239 OR (214)698-7207

CAUTION!! UNDERGROUND TELEPHONE IN AREA — CONTACT S.W.B.T. 48 HOURS PRIOR TO CONSTRUCTION PHONE:(214)698-7239 (UNDERGROUND) PHONE:(214)698-7240 (OVER-HEAD)

DRAINAGE CRITERIA

Q = CIA
C = 0.90, 0.30 for DA#15 & DA#16
Tc = 10 minutes, 15 minutes for DA#15 & DA#16
I = 8.74 inch/hour, 7.52 inch/hour for DA#15 & DA#16
DRAINAGE BASED ON 100 YEAR FLOOD

DRAINAGE AREA TABLE (DA#2)

DRAINAGE AREA #	AREA (acres)	Q_{100} (cfs)	COLLECTED INTO
DA#1	0.63	4.96	10' CURB INLET (NORTH SYSTEM)
DA#2	0.17	1.34	ROOF DRAIN (WEST SYSTEM)
DA#3	0.13	1.02	ROOF DRAIN (WEST SYSTEM)
DA#4	0.19	1.49	ROOF DRAIN (WEST SYSTEM)
DA#5	0.13	1.02	ROOF DRAIN (WEST SYSTEM)
DA#6	0.14	1.10	ROOF DRAIN (WEST SYSTEM)
DA#7	0.12	0.94	ROOF DRAIN (WEST SYSTEM)
DA#8	0.12	0.94	12" GRATE INLET (WEST SYSTEM)
DA#9	0.18	1.42	12" GRATE INLET (WEST SYSTEM)
DA#10	0.34	2.67	24" GRATE INLET (WEST SYSTEM)
DA#11	0.11	0.87	12" GRATE INLET (WEST SYSTEM)
DA#12	0.64	5.04	24" GRATE INLET (WEST SYSTEM)
DA#13	0.79	6.21	24" GRATE INLET (WEST SYSTEM)
DA#14	1.64	12.90	TYPE "Y" INLET (WEST SYSTEM)
DA#15	1.05	2.37	36" GRATE INLET (WEST SYSTEM)
DA#16	0.70	1.58	TYPE "Y" INLET (NORTH SYSTEM)

NORTH SYSTEM: DRAINS INTO ARAPAHO DRIVE STORM DRAIN
WEST SYSTEM: DRAINS INTO ADDISON ROAD STORM DRAIN

GRATE INLET CALCULATIONS

$Q = CA\sqrt{2gh}$
C = 0.7 (Clogging Factor)
A = AREA GRATE INLET OPENING (sq ft)
g = 32.2 ft/sec
h = 0.5 ft
AREA FOR GRATE No.12 = 0.28 sq ft
MAX Q FOR GRATE No.12 = 1.11 cfs
AREA FOR GRATE No.24 = 1.42 sq ft
MAX Q FOR GRATE No.24 = 5.65 cfs
AREA FOR GRATE No.36 = 3.61 sq ft
MAX Q FOR GRATE No.36 = 14.37 cfs

NOTE:
DRAINAGE AREA #16 INDICATE TEMPORARY COLLECTION OF DRAINAGE. UPON DEVELOPMENT OF THE AREA EAST OF SITE, DA#16 TO DRAIN INTO ARAPAHO ROAD AND THE TYPE "Y" INLET AT THE NORTHEAST CORNER IS TO BE REMOVED, PLUG BACK OF CURB INLET UPON REMOVAL OF 18" DRAIN PIPE.

DRAINAGE AREA #15 INDICATE TEMPORARY COLLECTION OF DRAINAGE. UPON DEVELOPMENT OF THE AREA SOUTH AND EAST OF SITE, DA#13 TO DRAIN INTO ARAPAHO ROAD AND DRAINAGE COLLECTION SYSTEM OF AREA SOUTH OF SITE AND COLLECTED IN 24" DRAIN PIPE SERVING TYPE "Y" INLET AT THE SOUTHWEST CORNER OF SITE.

GRATE INLETS TO BE

"American Industrial Pre-cast Products, Inc." CATCH BASIN No.12, No.20 & No.36 OR APPROVED EQUAL

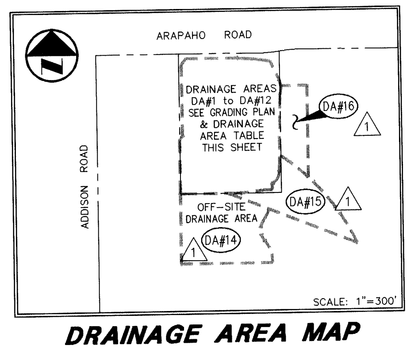

DRAINAGE AREA MAP

BENCH MARKS:

1. "□" CUT ON S.E. CORNER OF SIDEWALK AT THE ENTRANCE TO 4805 ARAPAHO RD, APPROX ±400 FEET EAST OF ADDISON RD.
   ELEV. 630.66
2. "□" ON SOUTH RIM OF MANHOLE LOCATED ON THE SOUTH SIDE OF ARAPAHO RD AT THE NORTHEAST CORNER OF SITE, APPROX. 16.5' EAST OF THE WEST END OF SIDEWALK.
   ELEV. 632.25

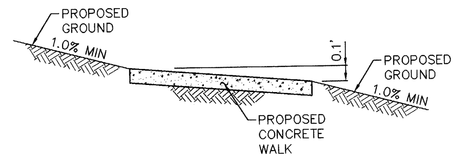

VIEW "A-A"

NTS

POLLUTION CONTROL GENERAL NOTES

1. THIS PLAN HAS BEEN PREPARED TO PROVIDE MEANS TO PREVENT OR MINIMIZE POLLUTION OF STORM WATER.
2. THE CONSTRUCTION ACTIVITY INCLUDED IN THIS PLAN WILL INCLUDE:
   A. CLEARING AND GRUBBING
   B. ROUGH GRADING
   C. FINAL GRADING
   D. UTILITY INSTALLATION
   E. PAVEMENT INSTALLATION
   F. BUILDING CONSTRUCTION
3. THE TOTAL ESTIMATED LAND AREA TO BE DISTURBED IS 4 ACRE.
4. THE ESTIMATED RUNOFF COEFFICIENT UPON COMPLETION OF THE PROJECT IS 0.90%.
5. THE STORM WATER EXITING THE SITE IS COLLECTED IN AN EXISTING DRAINAGE SYSTEM MAINTAINED BY THE CITY OF ADDISON, TEXAS.
6. THE SOILS ON THE SITE ARE GENERALLY EXPANSIVE CLAYS.
7. THE CONTRACTOR SHALL PROVIDE EROSION PROTECTION AROUND THE WORK AREA PERIMETER AND AT ALL INLET MOUTHS DURING CONSTRUCTION.
8. THE CONTRACTOR WILL REMOVE ALL EXCESS SOIL FROM CONSTRUCTION VEHICLES PRIOR TO EXITING THE SITE.
9. ALL DISTURBED AREAS WHICH WILL NOT BE RE-DISTURBED FOR A MINIMUM OF 21 DAYS MUST BE STABILIZED BY THE CONTRACTOR TO CONTROL EROSION.
10. THE CONTRACTOR SHALL UNDERTAKE PROPER METHODS TO REDUCE DUST GENERATION FROM THE SITE.
11. THE CONTRACTOR MUST COMPLY WITH FEDERAL, STATE AND LOCAL REGULATIONS REGARDING SEDIMENT AND EROSION CONTROL.
12. A COPY OF THIS PLAN MUST BE KEPT AT THE CONSTRUCTION FACILITY DURING THE ENTIRE CONSTRUCTION PERIOD.

NOTE:
SEE DETAIL SHEET FOR GENERAL NOTES & DETAILS

RECORD DRAWING

THIS DRAWING HAS BEEN REVISED TO REFLECT CONSTRUCTION RECORDS MAINTAINED AND PROVIDED BY THE CONTRACTOR FOR THIS PROJECT.

CONTRACTOR: UNLIMITED CONSTRUCTION, INC.
P.O. BOX 462213
DALLAS, TEXAS 75046-2213

DATE REVISED: 29 MARCH 1996

2 REVISED: MARCH 29, 1996
1 REVISED: JULY 13, 1995

STATE OF TEXAS — JAMES A. KOCH, JR. — 62218 — REGISTERED PROFESSIONAL ENGINEER — 4/11/96

PACHECO KOCH Consulting Engineers, Inc.
Civil Engineering • Land Surveying
9401 LBJ Freeway, Suite 300
Dallas, Texas 75243
(214) 235-3031

GRADING & EROSION CONTROL PLAN
SUMMERFIELD SUITES HOTEL
ARAPAHO ROAD
QUORUM CENTER ADDITION
TOWN OF ADDISON, TEXAS

DESIGN	DRAWN	DATE	SCALE	NOTES	FILE	NO.
JAK	BB	5/3/95	1"=30'			

PK NO: 1467-95.011 DWG NO: 1467-03B

PRINTS ISSUED

DATE	PURPOSE	NO.

FOR CONSTRUCTION:

REVISIONS

DATE	ITEM	NO.

LAW/KINGDON, INC.
ARCHITECTS & ENGINEERS
345 RIVERVIEW, WICHITA, KS 67203
Phone (316) 269-6230 Fax (316) 268-0205
Copyright© 1994

DRAWN	CHECKED
BB	JAK

RELATED DRAWINGS

SHELL	
DETAILS	
STRUCTURE	
MECHANICAL	
ELECTRICAL	
OTHER	

SEQUENCE NUMBER

OF ____ SHEETS

SUMMERFIELD SUITES® HOTEL
ADDISON, TEXAS
PROJECT NUMBER 94780

GRADING PLAN
SHEET TITLE

SHEET NUMBER
C-2
2 OF 7 SHEETS

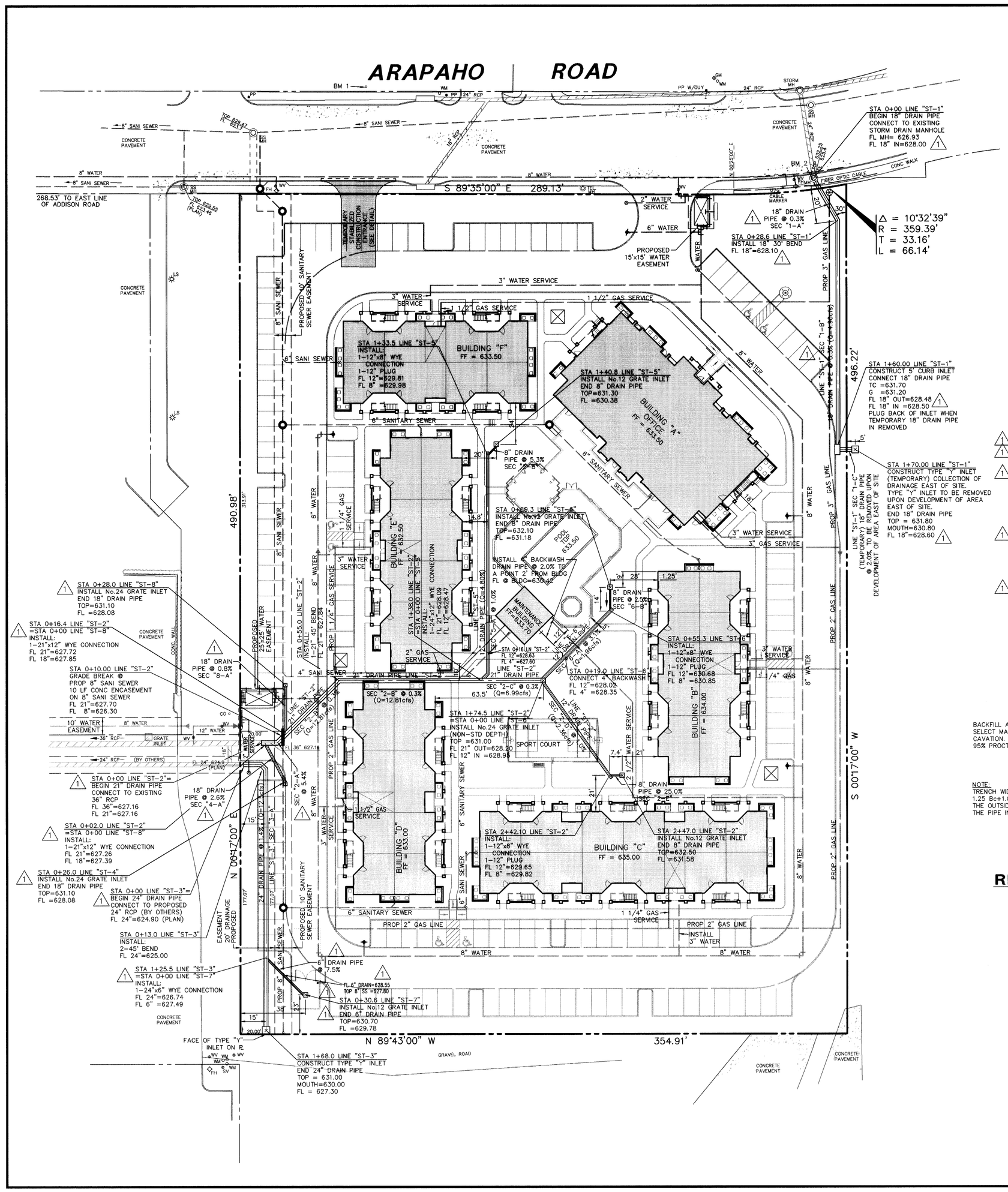

LEGEND

- FIRE HYDRANT
- POWER POLE
- LIGHT STANDARD
- WATER METER
- WATER VALVE
- CLEANOUT
- MANHOLE
- GAS METER
- PROPERTY LINE

GRAPHIC SCALE IN FEET (0, 15, 30, 60, 90)

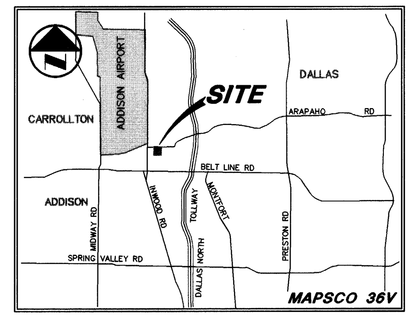

VICINITY MAP

CAUTION!!!
GAS LINE IN AREA—CONTACT LONE STAR GAS 48 HOURS PRIOR TO CONSTRUCTION PHONE:(214)263-3444

CONTACT:
MR ED KEAH, OPERATING SUPPORT SECTION DISTRIBUTION DEPARTMENT, 2 WORKING DAYS PRIOR TO EXCAVATING T.U. ELECTRIC FACILITIES. PHONE:(214)698-7239 OR (214)698-7207

CAUTION!!
UNDERGROUND TELEPHONE IN AREA – CONTACT S.W.B.T. 48 HOURS PRIOR TO CONSTRUCTION PHONE:(214)698-7239 (UNDERGROUND) PHONE:(214)698-7240 (OVER-HEAD)

NOTE:
CONNECT BUILDING "A" ROOF DRAIN TO 12" DRAIN PIPE STA 1+33.5 LINE "ST-5"
CONNECT BUILDING "B" ROOF DRAIN TO 12" DRAIN PIPE LINE "ST-6", SECTION "6-A"
CONNECT BUILDING "C" ROOF DRAIN TO 12" DRAIN PIPE LINE "ST-2", SECTION "2-D"
CONNECT BUILDING "D" ROOF DRAIN TO 24" DRAIN PIPE LINE "ST-2", SECTION "2-B"
CONNECT BUILDING "E" ROOF DRAIN TO 12" DRAIN PIPE LINE "ST-5", SECTION "5-A"
CONNECT BUILDING "F" ROOF DRAIN TO 12" DRAIN PIPE STA 1+33.5 LINE "ST-5"

	SECTION	PIPE DIA	SLOPE	Q_{100}	V_{100}	$V^2/2g$	C	Sf	n	$*Q_{100}$
1	SEC "1-A"	18"	0.3%	4.96 cfs	2.81 fps	0.1226	5.75 cfs	0.0022	0.013	6.54 cfs
1	SEC "1-B"	18"	0.3%	4.96 cfs	2.81 fps	0.1226	5.75 cfs	0.0022	0.013	6.54 cfs
	SEC "1-C"	18"	2.0%	0.00 cfs	0.00 fps	0.0000	14.86 cfs	0.0000	0.013	1.58 cfs
1	SEC "2-A"	21"	5.4%	24.06 cfs	10.00 fps	1.5528	36.82 cfs	0.0231	0.013	
	SEC "2-B"	21"	0.3%	12.81 cfs	5.33 fps	0.4411	8.68 cfs	0.0065	0.013	
	SEC "2-C"	21"	0.3%	6.99 cfs	2.91 fps	0.1315	8.68 cfs	0.0019	0.013	
	SEC "2-D"	12"	1.0%	2.36 cfs	3.00 fps	0.1398	3.56 cfs	0.0044	0.013	
	SEC "2-E"	8"	25.0%	0.87 cfs	2.47 fps	0.0947	6.12 cfs	0.0050	0.013	
	SEC "3-A"	24"	1.4%	12.90 cfs	3.98 fps	0.2460	26.77 cfs	0.0031	0.013	
1	SEC "4-A"	18"	2.6%	6.21 cfs	3.51 fps	0.5988	16.94 cfs	0.0035	0.013	13.62 cfs
1	SEC "5-A"	12"	1.0%	4.80 cfs	6.11 fps	0.5797	3.56 cfs	0.1982	0.013	
	SEC "5-B"	8"	5.3%	1.42 cfs	4.03 fps	0.2522	2.82 cfs	0.0134	0.013	
	SEC "6-A"	12"	5.0%	1.96 cfs	2.50 fps	0.0970	7.97 cfs	0.0030	0.013	
	SEC "6-B"	8"	2.5%	0.94 cfs	2.67 fps	0.1107	1.94 cfs	0.0059	0.013	
1	SEC "8-A"	18"	0.8%	5.04 cfs	2.85 fps	0.1261	9.40 cfs	0.0023	0.013	

1 DRAINAGE BASED ON 100 YEAR FLOOD, Tc = 10 minutes, I = 8.74 inch/hr, C = 0.90

* INDICATES: TEMPORARY RUNOFF CALCULATION (INCLUDES DA#15 OR DA#16) 1 1

BENCH MARKS:
1. "□" CUT ON S.E. CORNER OF SIDEWALK AT THE ENTRANCE TO 4805 ARAPAHO RD, APPROX ±400 FEET EAST OF ADDISON RD.
ELEV. 630.66
2. "□" ON SOUTH RIM OF MANHOLE LOCATED ON THE SOUTH SIDE OF ARAPAHO RD AT THE NORTHEAST CORNER OF SITE, APPROX. 16.5' EAST OF THE WEST END OF SIDEWALK.
ELEV. 632.25

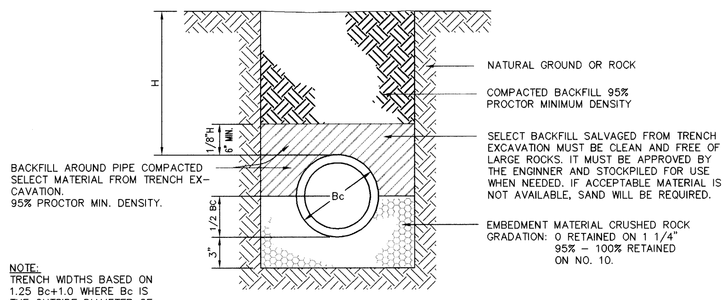

NOTE:
TRENCH WIDTHS BASED ON 1.25 Bc+1.0 WHERE Bc IS THE OUTSIDE DIAMETER OF THE PIPE IN FEET.

H=BACKFILL COVER ABOVE TOP OF PIPE.

TRENCH WIDTHS SHOWN ARE MINIMUM FOR PROPER PLACEMENT AND COMPACTION OF EMBEDMENT AND BACKFILL.

REINFORCED CONCRETE CLASS III PIPE INSTALLATION (EMBEDMENT DETAIL)

RECORD DRAWING

THIS DRAWING HAS BEEN REVISED TO REFLECT CONSTRUCTION RECORDS MAINTAINED AND PROVIDED BY THE CONTRACTOR FOR THIS PROJECT.

CONTRACTOR: SOUTHERN MECHANICAL PLUMBING, INC.
400 S. ASTON
SUNNYVALE, TEXAS 75182

DATE REVISED: 29 MARCH 1996

2 REVISED: MARCH 29, 1996
1 REVISED: JULY 13, 1995

STATE OF TEXAS — JAMES A. KOCH, JR. — 82218 — REGISTERED PROFESSIONAL ENGINEER — 4/11/96

PACHECO KOCH Consulting Engineers, Inc.
Civil Engineering • Land Surveying
9401 LBJ Freeway, Suite 300
Dallas, Texas 75243
(214) 235-3031

DRAINAGE PLAN
SUMMERFIELD SUITES HOTEL
ARAPAHO ROAD
QUORUM CENTER ADDITION
TOWN OF ADDISON, TEXAS

DESIGN	DRAWN	DATE	SCALE	NOTES	FILE	NO.
JAK	BB	5-3-95	1"=30'			

PK NO: 1467-95.011 DWG NO: 1467-03C

PRINTS ISSUED

DATE	PURPOSE	NO.

FOR CONSTRUCTION:

REVISIONS

DATE	ITEM	NO.

LAW/KINGDON, INC.
ARCHITECTS & ENGINEERS
345 RIVERVIEW, WICHITA, KS 67203
Phone (316) 268-8230 Fax (316) 268-8205
Copyright©C 1994

DRAWN		CHECKED	
BB		JAK	

RELATED DRAWINGS

SHELL	
DETAILS	
STRUCTURE	
MECHANICAL	
ELECTRICAL	
OTHER	

SEQUENCE NUMBER
OF _____ SHEETS

SUMMERFIELD SUITES® HOTEL
ADDISON, TEXAS
PROJECT NUMBER 94780

DRAINAGE PLAN
SHEET TITLE

SHEET NUMBER
C-3
3 OF 7 SHEETS

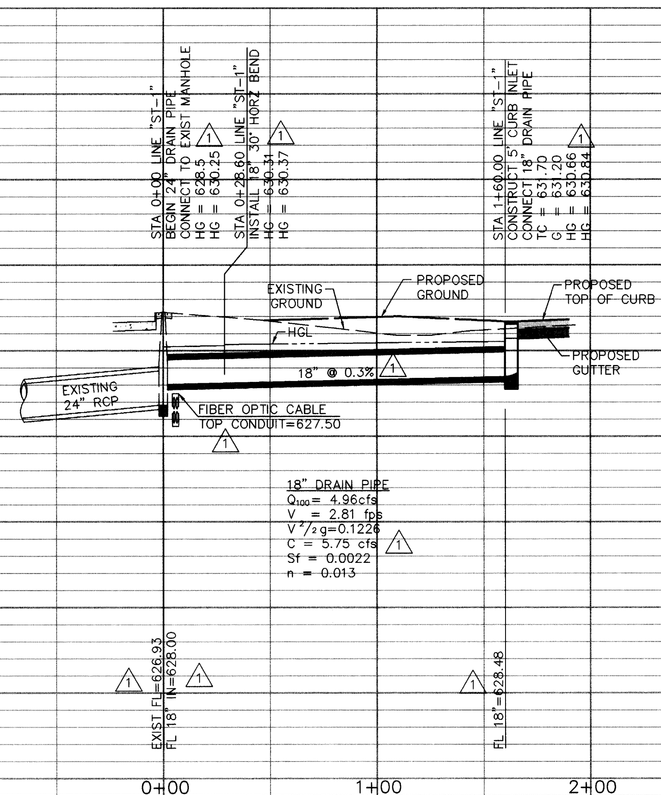

STORM DRAIN LINE "ST-1" PROFILE

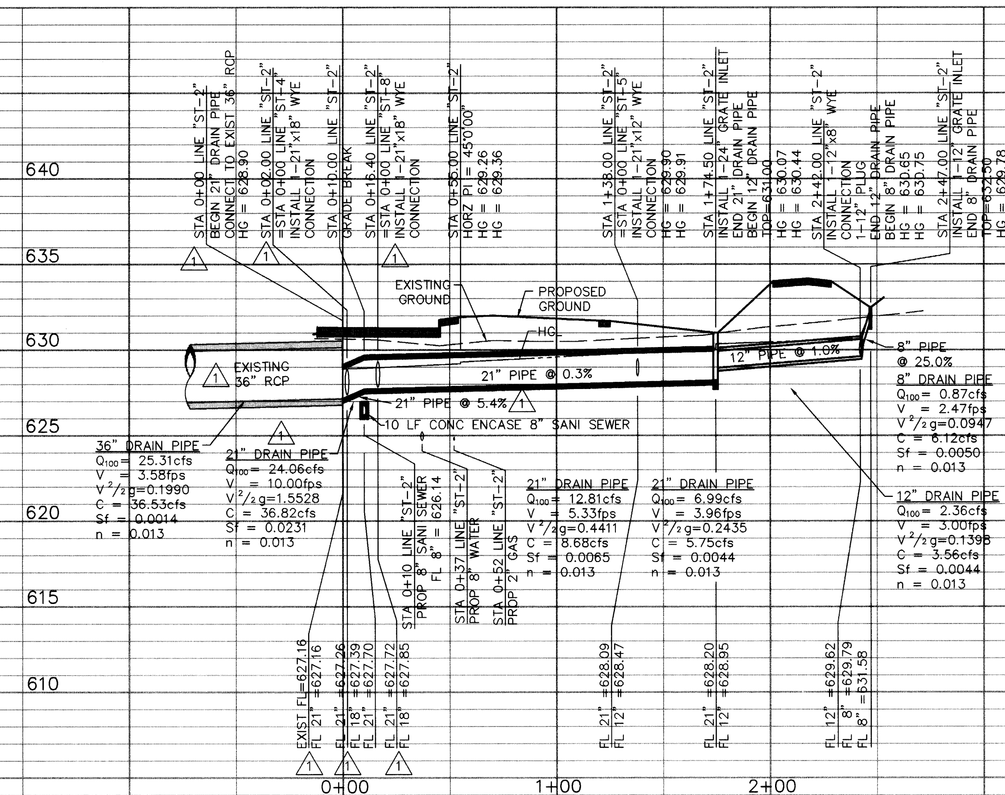

STORM DRAIN LINE "ST-2" PROFILE

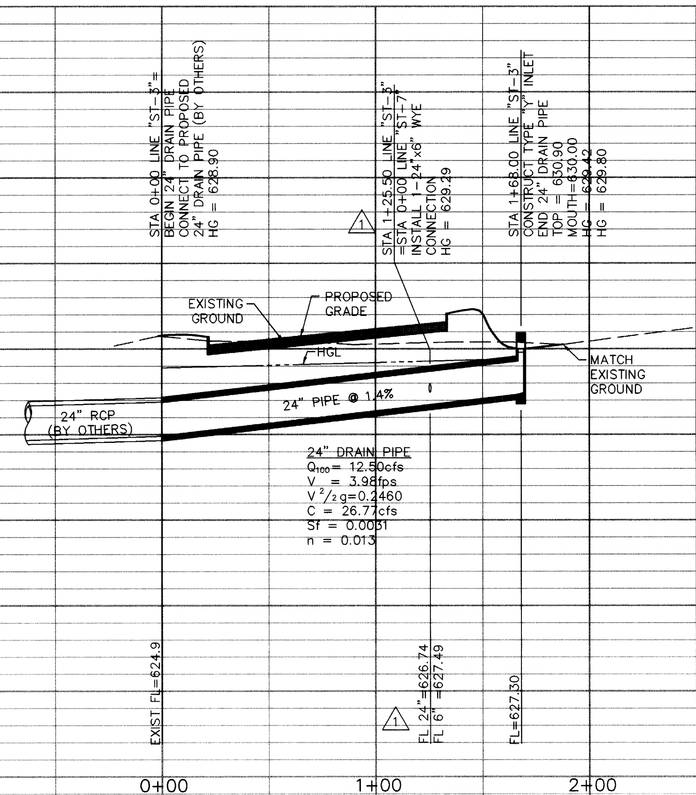

STORM DRAIN LINE "ST-3" PROFILE

BENCH MARKS:

1. "□" CUT ON S.E. CORNER OF SIDEWALK AT THE ENTRANCE TO 4805 ARAPAHO RD, APPROX ±400 FEET EAST OF ADDISON RD.
   ELEV. 630.66
2. "□" ON SOUTH RIM OF MANHOLE LOCATED ON THE SOUTH SIDE OF ARAPAHO RD AT THE NORTHEAST CORNER OF SITE, APPROX. 16.5' EAST OF THE WEST END OF SIDEWALK.
   ELEV. 632.25

RECORD DRAWING

THIS DRAWING HAS BEEN REVISED TO REFLECT CONSTRUCTION RECORDS MAINTAINED AND PROVIDED BY THE CONTRACTOR FOR THIS PROJECT.

CONTRACTOR: SOUTHERN MECHANICAL PLUMBING, INC.
400 S. ASTON
SUNNYVALE, TEXAS 75182

DATE REVISED: 29 MARCH 1996

STATE OF TEXAS
JAMES A. KOCH, JR.
62218
REGISTERED
PROFESSIONAL ENGINEER

2 REVISED: MARCH 29, 1996
1 REVISED: JULY 13, 1995

PACHECO KOCH
Consulting Engineers, Inc.
Civil Engineering • Land Surveying
9401 LBJ Freeway, Suite 300
Dallas, Texas 75243
(214) 235-3031

STORM DRAIN PROFILE
SUMMERFIELD SUITES HOTEL
ARAPAHO ROAD
QUORUM CENTER ADDITION
CITY OF ADDISON, TEXAS

DESIGN	DRAWN	DATE	SCALE	NOTES	FILE	NO.
JAK	BB	4/27/95	1"=40'H 1"= 5'V			

PK NO: 1467-95.011 DWG NO: 1467-04

PRINTS ISSUED

DATE	PURPOSE	NO.

FOR CONSTRUCTION

REVISIONS

DATE	ITEM	NO.

LAW/KINGDON, INC.
ARCHITECTS & ENGINEERS
345 RIVERVIEW, WICHITA, KS 67203
Phone (316) 269-0230 Fax (316) 269-0205
Copyright© 1994

DRAWN		CHECKED	
BB		JAK	

RELATED DRAWINGS

SHELL	
DETAILS	
STRUCTURE	
MECHANICAL	
ELECTRICAL	
OTHER	

SEQUENCE NUMBER

OF _____ SHEETS

SUMMERFIELD SUITES® HOTEL
ADDISON, TEXAS

PROJECT NUMBER 94780

STORM DRAIN PROFILE
SHEET TITLE

SHEET NUMBER
C4

4 OF 7 SHEETS

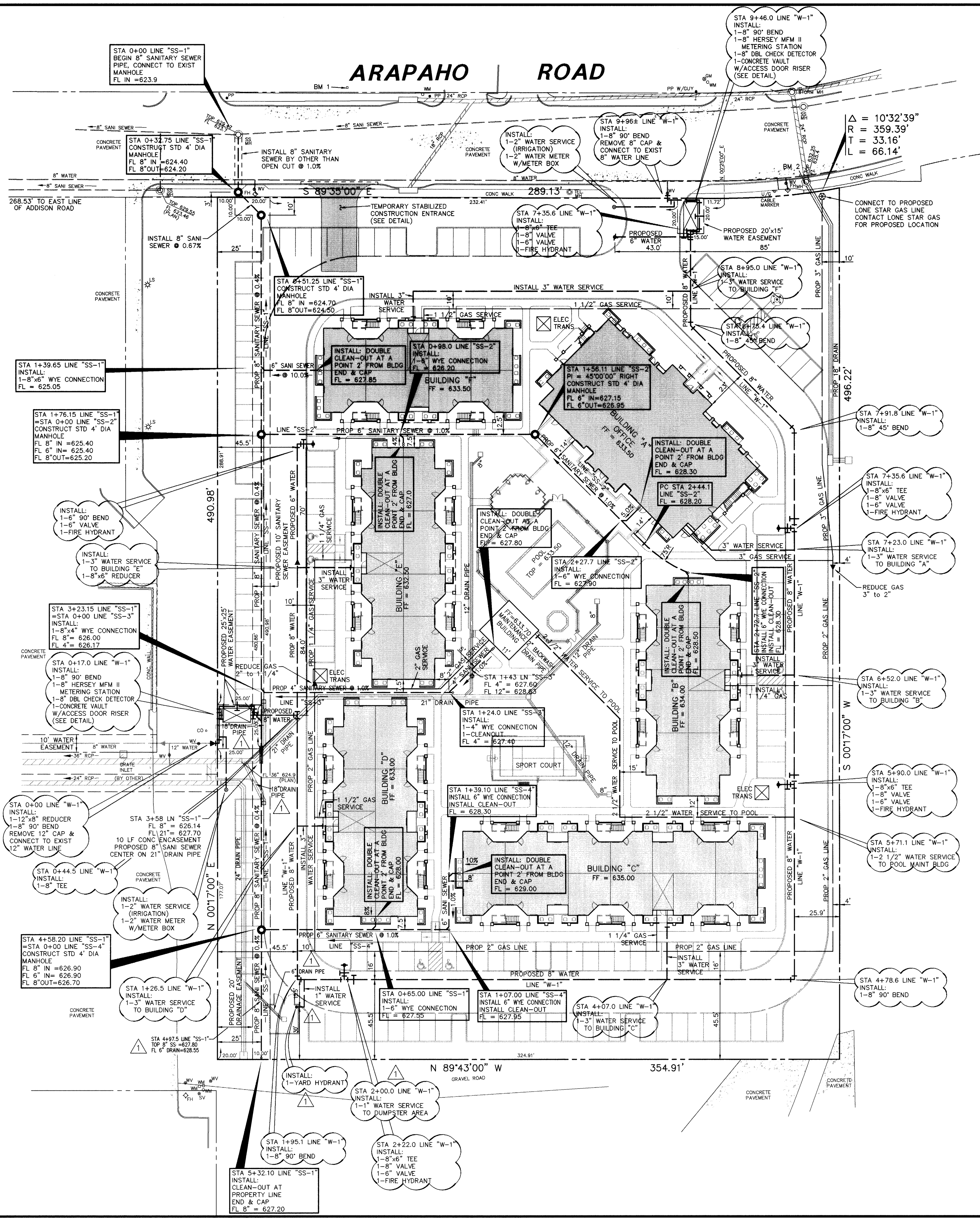

LEGEND

- FH — FIRE HYDRANT
- PP — POWER POLE
- LS — LIGHT STANDARD
- WM — WATER METER
- WV — WATER VALVE
- CO — CLEANOUT
- MH — MANHOLE
- GM — GAS METER
- — PROPERTY LINE

GRAPHIC SCALE IN FEET (0, 15, 30, 60, 90)

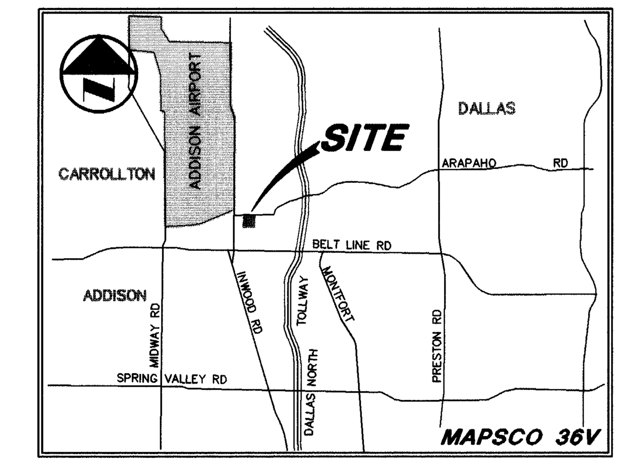

VICINITY MAP

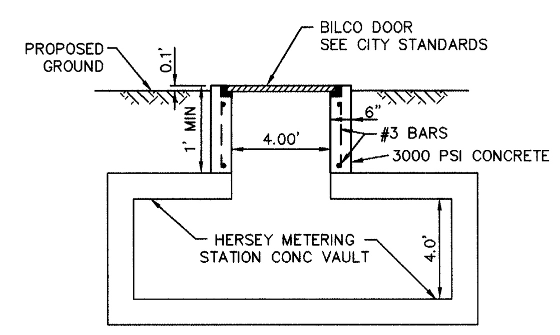

ACCESS DOOR RISER
NTS

CAUTION!!!
GAS LINE IN AREA–CONTACT LONE STAR GAS 48 HOURS PRIOR TO CONSTRUCTION
PHONE: (214)263-3444

CONTACT:
MR ED KEAH, OPERATING SUPPORT SECTION DISTRIBUTION DEPARTMENT, 2 WORKING DAYS PRIOR TO EXCAVATING T.U. ELECTRIC FACILITIES.
PHONE: (214)698-7239 OR (214)698-7207

CAUTION!!
UNDERGROUND TELEPHONE IN AREA – CONTACT S.W.B.T. 48 HOURS PRIOR TO CONSTRUCTION
PHONE: (214)698-7239 (UNDERGROUND)
PHONE: (214)698-7240 (OVER-HEAD)

BENCH MARKS:

1. "□" CUT ON S.E. CORNER OF SIDEWALK AT THE ENTRANCE TO 4805 ARAPAHO RD, APPROX ±400 FEET EAST OF ADDISON RD.
   ELEV. 630.66
2. "□" ON SOUTH RIM OF MANHOLE LOCATED ON THE SOUTH SIDE OF ARAPAHO RD AT THE NORTHEAST CORNER OF SITE, APPROX. 16.5' EAST OF THE WEST END OF SIDEWALK.
   ELEV. 632.25

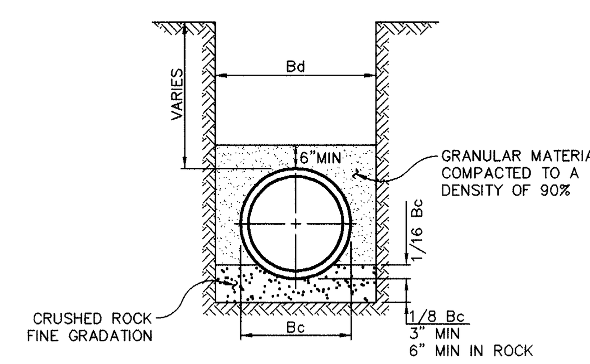

EMBEDMENT FOR PRIVATE WATER CONDUITS
BEDDING ANGLE 75°, L.F.1.5, E'=300
C.O.G. SPECS., ITEM 6.2.9 (C)(12)

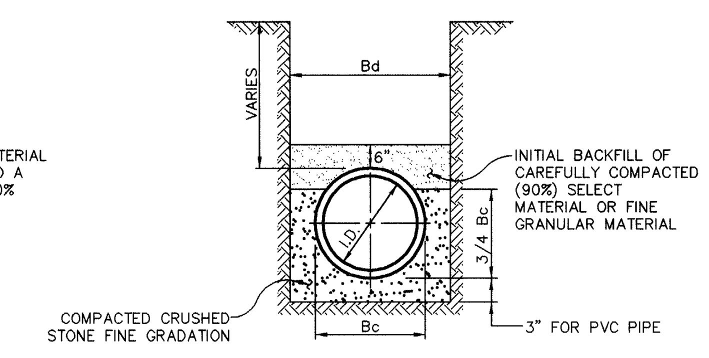

EMBEDMENT FOR PRIVATE SANITARY SEWER CONDUITS

NOTE:
PRIOR TO INSTALLATION OF WATER SERVICE, THE BACKFLOW PREVENTION DEVICE SHALL BE TESTED AND CERTIFIED TO FUNCTION BY A LICENSED PROFESSIONAL.

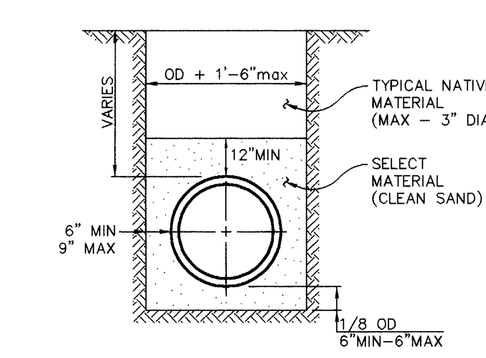

CLASS 4
EMBEDMENT FOR PUBLIC WATER CONDUITS

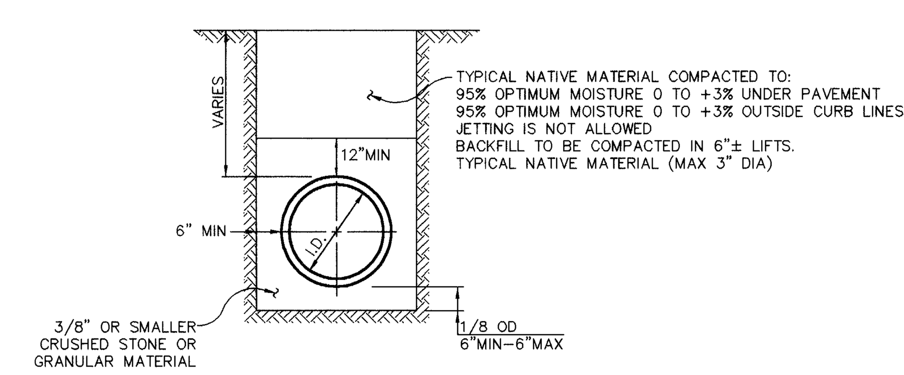

CLASS 4
EMBEDMENT FOR PUBLIC SANITARY SEWER CONDUITS

RECORD DRAWING

THIS DRAWING HAS BEEN REVISED TO REFLECT CONSTRUCTION RECORDS MAINTAINED AND PROVIDED BY THE CONTRACTOR FOR THIS PROJECT.

CONTRACTOR: SOUTHERN MECHANICAL PLUMBING, INC.
400 S. ASTON
SUNNYVALE, TEXAS 75182

DATE REVISED: 29 MARCH 1996

⚠2

STATE OF TEXAS — JAMES A. KOCH, JR. — 62218 — REGISTERED PROFESSIONAL ENGINEER

⚠2 REVISED: MARCH 29, 1996
⚠1 REVISED: JULY 13, 1995

PACHECO KOCH Consulting Engineers, Inc. — 9401 LBJ Freeway, Suite 300, Dallas, Texas 75243, (214) 235-3031
Civil Engineering • Land Surveying

UTILITY PLAN
SUMMERFIELD SUITES HOTEL
ARAPAHO ROAD
QUORUM CENTER ADDITION
TOWN OF ADDISON, TEXAS

DESIGN	DRAWN	DATE	SCALE	NOTES	FILE	NO.
JAK	BB	5/3/95	1"=30'			

PK NO: 1467-95.011
DWG NO: 1467-03D

PRINTS ISSUED

DATE	PURPOSE	NO.

FOR CONSTRUCTION:

REVISIONS

DATE	ITEM	NO.

LAW/KINGDON, INC.
ARCHITECTS & ENGINEERS
345 RIVERVIEW, WICHITA, KS 67203
Phone (316) 268-0230 Fax (316) 268-0205
Copyright © 1994

DRAWN	CHECKED
BB	JAK

RELATED DRAWINGS
SHELL
DETAILS
STRUCTURE
MECHANICAL
ELECTRICAL
OTHER

SEQUENCE NUMBER
OF ____ SHEETS

SUMMERFIELD SUITES® HOTEL
ADDISON, TEXAS
PROJECT NUMBER 94780

UTILITY PLAN
SHEET TITLE
SHEET NUMBER
C-5

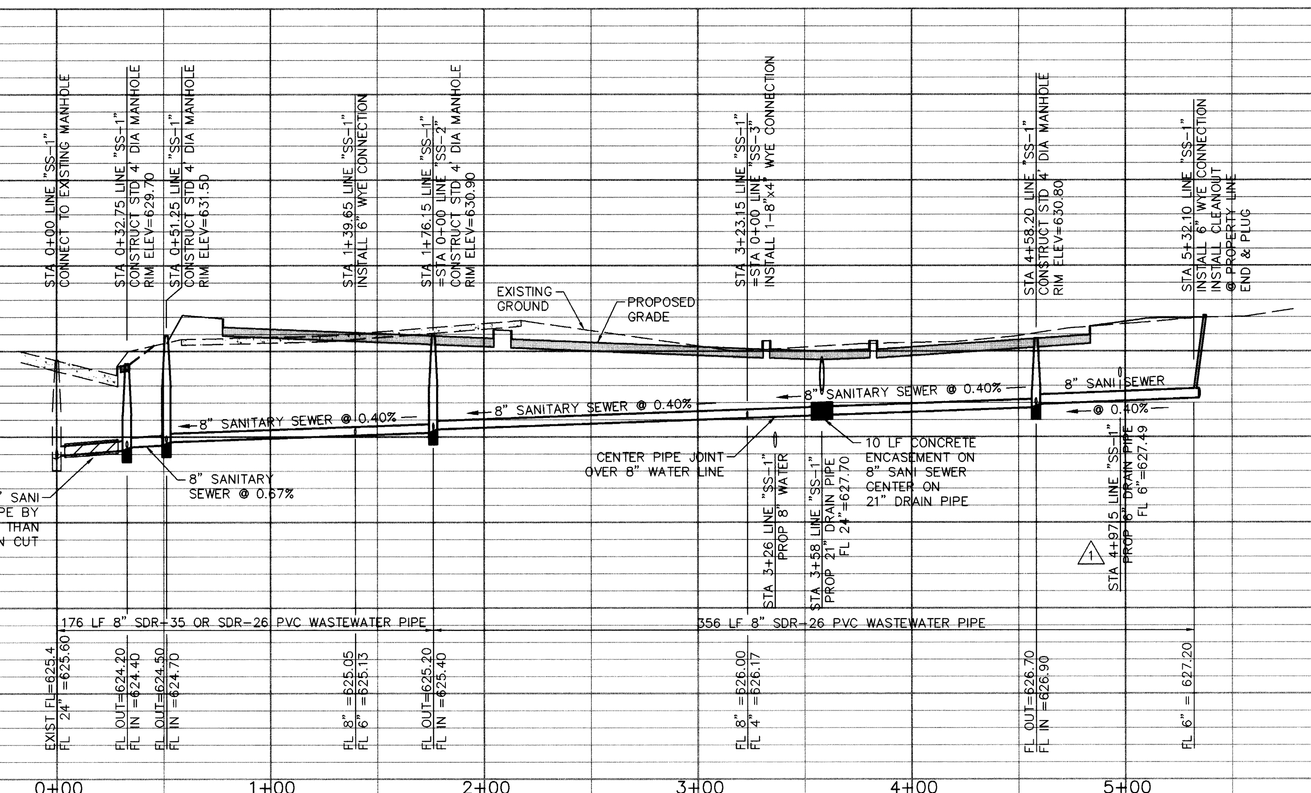

SANITARY SEWER LINE "SS-1" PROFILE

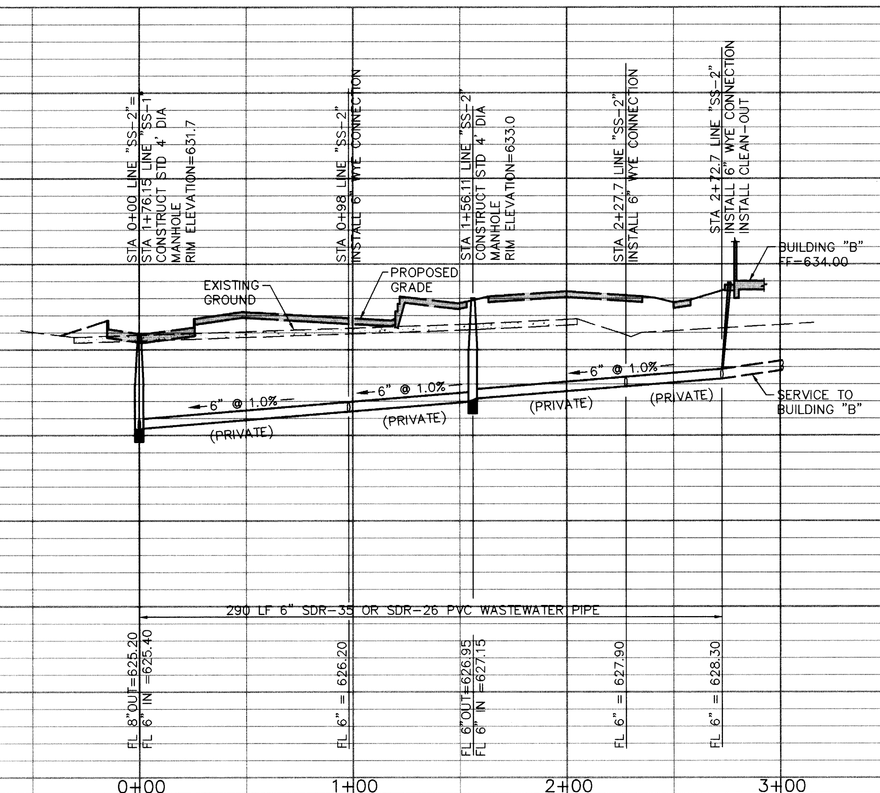

SANITARY SEWER LINE "SS-2" PROFILE

BENCH MARKS:

1. "□" CUT ON S.E. CORNER OF SIDEWALK AT THE ENTRANCE TO 4805 ARAPAHO RD, APPROX ±400 FEET EAST OF ADDISON RD.
   ELEV. 630.66
2. "□" ON SOUTH RIM OF MANHOLE LOCATED ON THE SOUTH SIDE OF ARAPAHO RD AT THE NORTHEAST CORNER OF SITE, APPROX. 16.5' EAST OF THE WEST END OF SIDEWALK.
   ELEV. 632.25

RECORD DRAWING

THIS DRAWING HAS BEEN REVISED TO REFLECT CONSTRUCTION RECORDS MAINTAINED AND PROVIDED BY THE CONTRACTOR FOR THIS PROJECT.

CONTRACTOR: SOUTHERN MECHANICAL PLUMBING, INC.
400 S. ASTON
SUNNYVALE, TEXAS 75182

DATE REVISED: 29 MARCH 1996

STATE OF TEXAS
JAMES A. KOCH, JR.
62218
REGISTERED PROFESSIONAL ENGINEER

2 REVISED: MARCH 29, 1996
1 REVISED: JULY 13, 1995

PACHECO KOCH
Consulting Engineers, Inc.
Civil Engineering • Land Surveying
9401 LBJ Freeway, Suite 300
Dallas, Texas 75243
(214) 235-3031

SANITARY SEWER PROFILE

SUMMERFIELD SUITES HOTEL

ARAPAHO ROAD

QUORUM CENTER ADDITION

CITY OF ADDISON, TEXAS

DESIGN	DRAWN	DATE	SCALE	NOTES	FILE	NO.
JAK	BB	5/3/95	1"=40'H 1"= 5'V			

PK NO: 1467-95.011 DWG NO: 1467-05

PRINTS ISSUED

DATE	PURPOSE	NO.

FOR CONSTRUCTION:

REVISIONS

DATE	ITEM	NO.

LAW/KINGDON, INC.
ARCHITECTS & ENGINEERS
345 RIVERVIEW, WICHITA, KS 67203
Phone (316) 268-0230 Fax (316) 268-0205

Copyright© 1994

DRAWN		CHECKED	
BB		JAK	

RELATED DRAWINGS

SHELL	
DETAILS	
STRUCTURE	
MECHANICAL	
ELECTRICAL	
OTHER	

SEQUENCE NUMBER

OF _____ SHEETS

SUMMERFIELD SUITES® HOTEL

ADDISON, TEXAS

PROJECT NUMBER 94780

SANITARY SEWER PROFILE

SHEET TITLE

SHEET NUMBER

C-6

6 OF 7 SHEETS

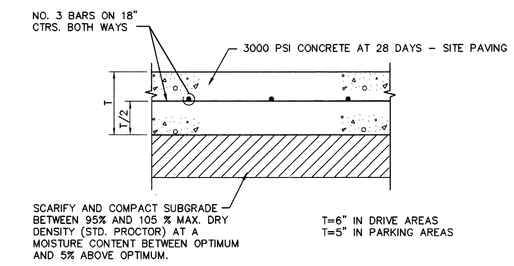

1 PAVEMENT SECTION

NOT TO SCALE

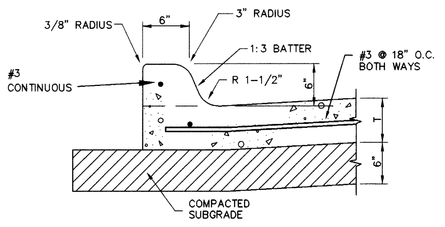

2 INTEGRAL CURB

NOT TO SCALE

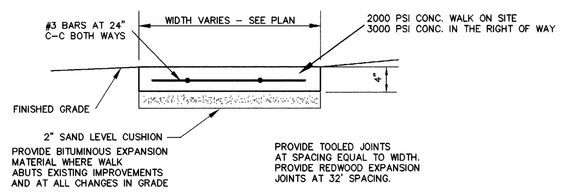

3 CONCRETE WALK

NOT TO SCALE

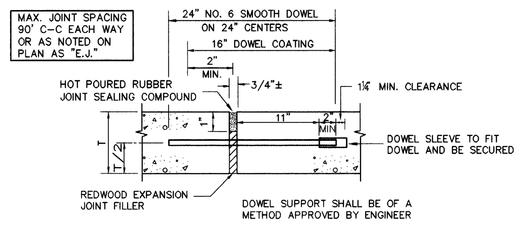

4 EXPANSION JOINT

NOT TO SCALE

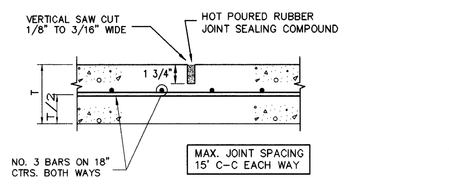

5 SAWED DUMMY JOINT

NOT TO SCALE

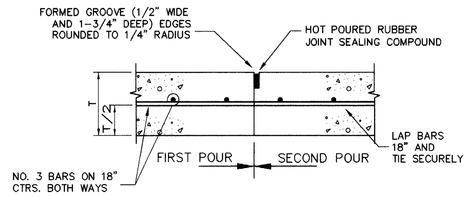

6 CONSTRUCTION JOINT

NOT TO SCALE

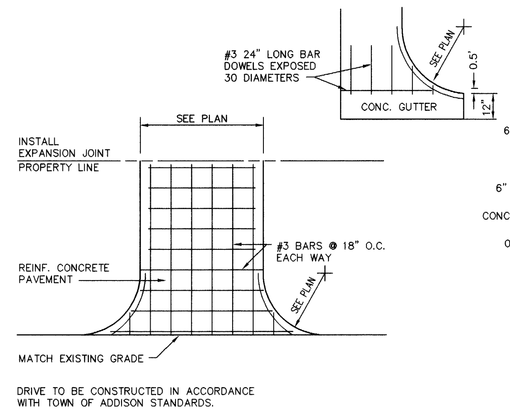

7 DRIVEWAY APPROACH

NOT TO SCALE

NOTE:
SIGNAGE AND MARKINGS TO BE IN ACCORDANCE WITH FEDERAL STATE AND LOCAL REGULATIONS. PREPARE SURFACE PER STATE OF TEXAS REQUIREMENTS

NOTE:
MAXIMUM SLOPE FOR ALL PATHS 5%; MAX CROSSFALL IS 2% FOR THE FIRST FIVE FOOT FROM THE DOOR A 2% SLOPE (MAX) MUST BE MAINTAINED

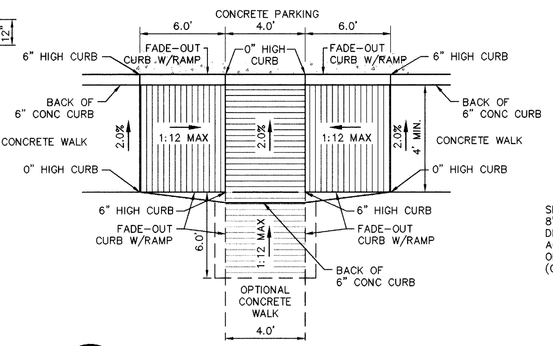

8 ACCESS RAMP

NOT TO SCALE

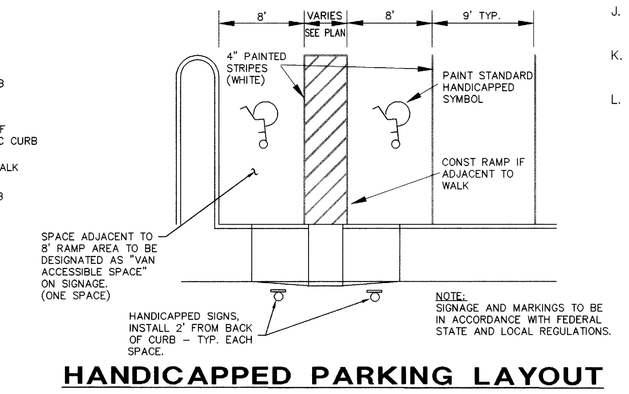

HANDICAPPED PARKING LAYOUT

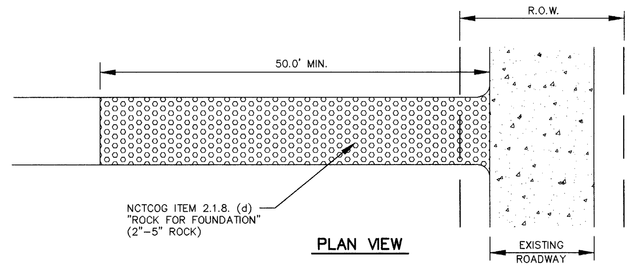

CONSTRUCTION ENTRANCE

N.T.S.

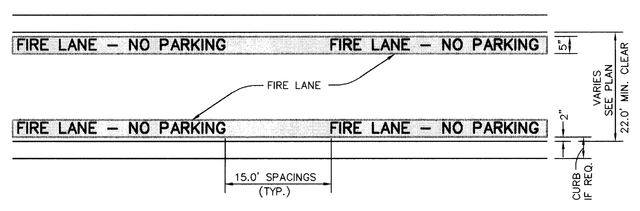

9 FIRE LANE STRIPING DETAIL

NOT TO SCALE

GENERAL NOTE:

A. STRIPING TO BE DONE IN ACCORDANCE WITH CITY STANDARDS.

STRIPING DETAIL:

A. PAINT:

1. STRIPE SHALL BE FIVE (5) INCHES WIDE PAINTED WITH AN EXTERIOR ACRYLIC LATEX PAINT.

   A. COLOR SHALL BE "TRAFFIC RED" GLIDDEN NO. 63251 OR EQUAL.

2. LETTERS SHALL BE FOUR (4) INCHES HIGH PAINTED WITH AN EXTERIOR ACRYLIC LATEX PAINT.

   B. COLOR SHALL BE "TRAFFIC WHITE" GLIDDEN NO. 563245 OR EQUAL.

B. APPLICATION:

1. STRIPE MAY BE BRUSHED OR SPRAYED, ONE COAT TO FINISH.

2. LETTERS SHALL BE STENCIL FORMED, BRUSH APPLIED AND SPACED AS DETAILED ON THIS SHEET.

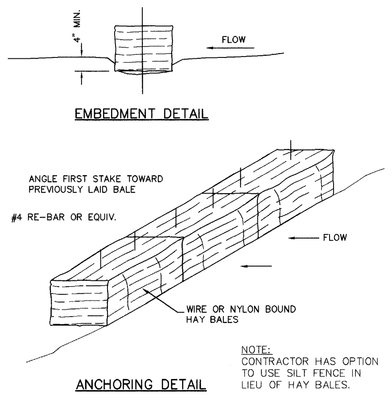

EROSION CONTROL DETAIL:

1. DURING THE CONSTRUCTION PERIOD, THE CONTRACTOR SHALL PROVIDE AND MAINTAIN HAY BALE CHECK DAMS PER THE DETAIL, IN THE AREAS INDICATED ON THE GRADING PLAN AND ANY OTHER AREAS AS DIRECTED BY THE ENGINEER.
2. THE CONTRACTOR SHALL PROVIDE AND MAINTAIN HAY BALES AROUND ANY OPENINGS INTO THE STORM SEWER SYSTEM UNTIL THE PROJECT IS COMPLETED.

11 EROSION CONTROL DETAIL

NOT TO SCALE

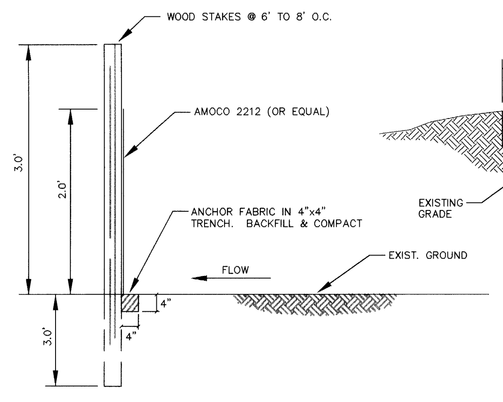

LOW FLOW SILT FENCE DETAIL:

TYPICAL TEMPORARY FILTER FABRIC WITHOUT WIRE FABRIC

N.T.S.

NOTE:
INSTALL EROSION CONTROL SILT FENCE ALONG PERIMETER OF PROPERTY TO PREVENT SILT FROM DRAINING OFF SITE.

GENERAL NOTES:

A. Prior to final acceptance by the Town of Addison,

1. A Texas Registered Professional Engineer shall certify that the project was constructed in accordance with the plans and specifications approved by the Town of Addison.
2. The owner shall provide 1 reproducible set of as–builts (sealed and certified by a Texas Registered Professional Engineer) and 2 blue line sets.
3. A five foot sidewalk shall be installed along Arapaho Road, See attached detail.
4. A one year 10% maintenance bond is required for the internal subdivision infrastructure.
5. Contractor shall demonstrate that the water and sanitary sewer systems meet the proper pressure, bacteria and mandrel tests. In addition, the contractor shall provide a VHS format video tape of the sanitary sewer.

B. Prior to starting construction, the contractor shall contact the utility companies to located existing facilities. These include but may not be limited to the following:

1. Town of Addison
2. Lone Star Gas
3. Southwestern Bell
4. Storer Cable
5. Planned Cable Systems
6. TU Electric

C. Prior to beginning construction, the owner or his authorized representative shall convene a Pre–Construction Conference between the Town of Addison, Consulting Engineer, Contractor(s), Utility companies and any other affected parties. Notify Bruce Ellis at 450–2847 at least 48–hours prior to beginning of construction.

D. Any existing pavement, curbs, and/or sidewalks damaged or removed will be repaired by the contractor at their expense.

E. Lot pins shall be installed after construction and prior to final acceptance; concrete monuments shall be placed as shown on the final plat and iron pins shall be placed at Engineer, Corners, curve points and angle points in public right–of–way. Concrete monuments shall be six (6) inches in diameter and twenty–four (24) inches long. An iron rod one–half inch in diameter embedded at least three (3) inches in the monument at the exact intersection point of the monument. The monuments shall be set at such an elevation that after construction, the top of the monument will be not less than twelve (12) inches below the ground surface.

F. The contractor shall stamp a 2–inch "S" and 2–inch "W" in the curb at the location of the sewer service and water service lines, respectfully.

G. At intersections that have valley drainage, the crown of the intersecting streets will culminate in a distance of 40 feet from the intersecting curb line unless otherwise noted.

H. Temporary or permanent street barricades shall remain at all point of ingress and egress to prevent public use until such street received final acceptance.

I. Contractor shall obtain a right–of–way permit by the Town of Addison for working within the public right–of–way.

J. During construction, the owner shall provide a qualified geotechnical lab to perform materials testing during the construction, at the request of the Town of Addison.

K. The contractor shall submit material sheets to the Town of Addison for approval prior to incorporating materials into the job.

L. The utility contractor shall submit to the Town of Addison for approval a trench safety plan sealed by a registered professional engineer for the installation of utilities greater than five (5) feet in depth.

PAVING AND DRAINAGE GENERAL NOTES

1.ALL WORK, UNLESS OTHERWISE NOTED, SHALL CONFORM TO THE STANDARD SPECIFICATIONS FOR PUBLIC WORKS CONSTRUCTION, ISSUED BY THE NORTH CENTRAL TEXAS COUNCIL OF GOVERNMENTS, AND TOWN OF ADDISON STANDARD CONSTRUCTION SPECIFICATIONS.

2.UNLESS OTHERWISE NOTED, ALL CONCRETE SHALL BE CLASS"A",(3000 PSI).

3.THE HORIZONTAL AND VERTICAL LOCATIONS OF EXISTING SUBSURFACE UTILITIES HAVE BEEN DETERMINED FROM DATA RECORDED BY OTHERS. CONTRACTOR SHALL VERIFY THAT NECESSARY CROSSING CLEARANCES BETWEEN EXISTING AND PROPOSED UTILITIES EXIST PRIOR TO CONSTRUCTION OF ANY SUCH CROSSING. IT WILL BE THE RESPONSIBILITY OF THE CONTRACTOR TO PROTECT ALL PUBLIC UTILITIES IN THE CONSTRUCTION OF THIS PROJECT.

4.CONTRACTOR SHALL MAINTAIN ONE SET OF "RECORD DRAWINGS" ON SITE WHICH WILL BE SUBMITTED TO OWNER OR ENGINEER UPON COMPLETION OF THE PROJECT. RECORD DRAWINGS SHALL INDICATE THE LOCATION OF ALL SUBTERRANEAN UTILITY IMPROVEMENTS, AND INDICATE TIES TO ALL MANHOLES, CULVERTS, INLETS, JUNCTION BOXES, ETC.

5.THE CONTRACTOR IS RESPONSIBLE FOR COMPLIANCE WITH ALL FEDERAL, STATE AND LOCAL REGULATIONS REGARDING TRENCH SAFETY.

6.STORM DRAIN LINES MAY BE OF THE FOLLOWING MATERIALS:
a. RCP C–76, CLASS III
INSTALLED IN ACCORDANCE WITH MANUFACTURER'S SPECIFICATIONS.

7.BARRICADING AND PROJECT SIGNS SHALL CONFORM TO THE "TEXAS MANUAL ON UNIFORM TRAFFIC CONTROL DEVICES, PART VI".

8.PRIOR TO COMMENCEMENT OF CONSTRUCTION, BONDS AND THREE–WAY CONTRACTS SHALL BE SUBMITTED TO THE CITY AS REQUIRED.

WATER AND SANITARY SEWER GENERAL NOTES

1.ALL WORK, UNLESS OTHERWISE NOTED, SHALL CONFORM TO THE STANDARD SPECIFICATIONS FOR PUBLIC WORKS CONSTRUCTION, ISSUED BY THE NORTH CENTRAL TEXAS COUNCIL OF GOVERNMENTS, AND TOWN OF ADDISON STANDARD CONSTRUCTION SPECIFICATIONS.

2.UNLESS OTHERWISE NOTED, ALL CONCRETE SHALL BE CLASS"A",(3000 PSI).

3.THE HORIZONTAL AND VERTICAL LOCATIONS OF EXISTING SUBSURFACE UTILITIES HAVE BEEN DETERMINED FROM DATA RECORDED BY OTHERS. CONTRACTOR SHALL VERIFY THAT NECESSARY CROSSING CLEARANCES BETWEEN EXISTING AND PROPOSED UTILITIES EXIST PRIOR TO CONSTRUCTION OF ANY SUCH CROSSING. IT WILL BE THE RESPONSIBILITY OF THE CONTRACTOR TO PROTECT ALL PUBLIC UTILITIES IN THE CONSTRUCTION OF THIS PROJECT.

4.CONTRACTOR SHALL MAINTAIN ONE SET OF "RECORD DRAWINGS" ON SITE WHICH WILL BE SUBMITTED TO OWNER OR ENGINEER UPON COMPLETION OF THE PROJECT. RECORD DRAWINGS SHALL INDICATE THE LOCATION OF ALL SUBTERRANEAN UTILITY IMPROVEMENTS, AND INDICATE TIES TO ALL MANHOLES, CULVERTS, INLETS, JUNCTION BOXES, ETC.

5.ALL WATER MAINS SHALL BE PROTECTION OR PVC C900, DR 14, CLASS 200. CATHODIC PROTECTION

6.ALL WATER MAINS UNLESS OTHERWISE NOTED SHALL HAVE A MINIMUM COVER OF 48" BELOW FINISHED GRADE.

7.SANITARY SEWER PIPE SHALL BE PVC SDR–35, OR SDR–26 AS NOTED.

8.THE CONTRACTOR IS RESPONSIBLE FOR COMPLIANCE WITH ALL FEDERAL, STATE AND LOCAL REGULATIONS REGARDING TRENCH SAFETY.

10.BARRICADING AND PROJECT SIGNS SHALL CONFORM TO "STATE DEPARTMENT OF HIGHWAYS AND PUBLIC TRANSPORTATION BARRICADING AND CONSTRUCTION STANDARDS."

11.PRIOR TO COMMENCEMENT OF CONSTRUCTION, BONDS AND THREE–WAY CONTRACTS SHALL BE SUBMITTED TO THE CITY AS REQUIRED.

12.WHERE A SANITARY SEWER PARALLELS A WATER LINE, THE SEWER SHALL BE CONSTRUCTED OF CAST IRON, DUCTILE IRON OR PVC MEETING ASTM SPECIFICATIONS WITH A PRESSURE RATING FOR BOTH THE PIPE AND JOINTS OF 150 PSI. THE VERTICAL SEPARATION SHALL BE MINIMUM OF TWO FEET BETWEEN OUTSIDE DIAMETERS AND THE HORIZONTAL SEPARATION SHALL BE A MINIMUM OF FOUR FEET BETWEEN OUTSIDE DIAMETERS. THE SEWER SHALL BE LOCATED BELOW THE WATER LINE.

RECORD DRAWING

THIS DRAWING HAS BEEN REVISED TO REFLECT CONSTRUCTION RECORDS MAINTAINED AND PROVIDED BY THE CONTRACTOR FOR THIS PROJECT.

CONTRACTOR: SOUTHERN MECHANICAL PLUMBING, INC.
400 S. ASTON
SUNNYVALE, TEXAS 75182

DATE REVISED: 29 MARCH 1996

⚠ REVISED: MARCH 29, 1996

STATE OF TEXAS
JAMES A. KOCH, JR.
62218
REGISTERED PROFESSIONAL ENGINEER

4.9.96

PACHECO KOCH Consulting Engineers, Inc.
Civil Engineering • Land Surveying
9401 LBJ Freeway, Suite 300
Dallas, Texas 75243
(214) 235-3031

STANDARD DETAILS
SUMMERFIELD SUITES HOTEL
ARAPAHO ROAD
QUORUM CENTER ADDITION
TOWN OF ADDISON, TEXAS

DESIGN	DRAWN	DATE	SCALE	NOTES	FILE	NO.
JAK	BB	4/27/95	1"=30'			

PK NO: 1467–95.011 DWG NO: 1467–06

PRINTS ISSUED

DATE	PURPOSE	NO.

FOR CONSTRUCTION:

REVISIONS

DATE	ITEM	NO.

LAW/KINGDON, INC.
ARCHITECTS & ENGINEERS
345 RIVERVIEW, WICHITA, KS 67203
Phone (316) 268-0230 Fax (316) 268-0205
Copyright© 1994

DRAWN	CHECKED
BB	JAK

RELATED DRAWINGS

SHELL	
DETAILS	
STRUCTURE	
MECHANICAL	
ELECTRICAL	
OTHER	

SEQUENCE NUMBER

OF _____ SHEETS

SUMMERFIELD SUITES® HOTEL

ADDISON, TEXAS

PROJECT NUMBER 94780

STANDARD DETAILS

SHEET TITLE

SHEET NUMBER

C-7

7 OF 7 SHEETS