1-HR WALL @ STUCCO

ICBO Evaluation Service, Inc. Accredited by the American National Standards Institute
5360 WORKMAN MILL ROAD • WHITTIER, CALIFORNIA 90601-2299
A subsidiary corporation of the International Conference of Building Officials

EVALUATION REPORT

ER-4776
Issued July 1, 2000

Copyright © 2000 ICBO Evaluation Service, Inc.

Filing Category: EXTERIOR COATINGS (060)

MAGNA WALL FIBER-REINFORCED STUCCO PRODUCTS

MAGNA WALL, INC.
POST OFFICE BOX 847
BOERNE, TEXAS 78006

SENERGY, INC.
3650 ST. JOHNS BLUFF ROAD SOUTH
JACKSONVILLE, FLORIDA 32224

1.0 SUBJECT

Magna Wall Fiber-reinforced Stucco Products.

2.0 DESCRIPTION

2.1 General:

Magna Wall Fiber-reinforced Stucco Products are exterior cementitious wall coatings consisting of proprietary mixtures of portland cement, water, sand, fibers and proprietary admixtures. The products are applied onto wire fabric or metal lath, which is mechanically fastened to the framing members. Approved substrates are foam plastic insulation board, Fome Cor Board Lathing Material, exterior gypsum sheathing, Dens Glass Gold Gypsum Board, exterior plywood, oriented strand board (OSB), fiberboard, and ThermoPly exterior sheathing attached to wood or steel construction. Products may also be applied over concrete or concrete masonry units with or without metal reinforcement. When applied directly without metal reinforcement, the minimum thickness of the product is 1/4 inch (6.4 mm). Product may be installed over insulated concrete form (ICF) systems, provided the ICF system is designed to allow mechanical attachment of woven wire or expanded metal lath. Coating applied to ICF systems with lath shall be a minimum of 3/8 inch (9.5 mm) thick.

2.2 Materials:

2.2.1 Magna Wall Fiber-reinforced Stucco: Magna Wall Fiber-reinforced Stucco is a factory-prepared mixture of Type I, II or III portland cement complying with ASTM C 150-94, fibers and proprietary admixtures. The mixtures are packaged in 80-pound (36.29 kg) bags. Five to seven gallons (18.9 to 26.5 L) of clean water and 180 to 240 pounds (81.65 to 99.8 kg) of sand are added to each bag in the field, and the materials are mixed in accordance with the manufacturer's recommendations. Product is also available in a pre-sanded form from the factory, requiring only the addition of 2 to 4 gallons (7.6 to 15.2 L) of clean water. When required, colors may be added in accordance with the manufacturer's instructions for mixing, which are printed on each bag.

An alternative method permits the product to be blended at a batching plant and delivered with sand in a bulk container to the jobsite, where it is field-mixed with water, provided the following conditions are met:

1. The bulk container bears an identification label listing the manufacturer's name and address, the product name and the evaluation report number.
2. A signed certificate from the batching plant accompanies each unit, stating the plant name, jobsite and address, date of manufacture, quantity, and curing instructions. The ratio of batched sand amounts to 80 pounds (36.29 kg) of mixture and must be as stated in this report.
3. Procedures must be in place to prevent tampering with the controls on the amount of product mixture and sand combined.

2.2.2 Sand: Sand must be clean and free from deleterious amounts of loam, clay, silts, soluble salts and organic matter. Sand gradation shall comply with Table 1 or Table 2, which are drawn from ASTM C 144-97 and ASTM C 897-95.

TABLE 1—SAND GRADATION (DRAWN FROM ASTM C 144-97)

SIEVE SIZE	PERCENT PASSING, ±2 PERCENT	
	Natural Sand	Manufactured Sand
4.75 mm (No. 4)	100	100
2.36 mm (No. 8)	95 to 100	95 to 100
1.18 mm (No. 16)	70 to 100	70 to 100
600 μm (No. 30)	40 to 75	40 to 75
300 μm (No. 50)	10 to 35	20 to 40
150 μm (No. 100)	2 to 15	10 to 25
75 μm (No. 200)	0 to 5	0 to 10

TABLE 2—SAND GRADATION (DRAWN FROM ASTM C 897-95)

U.S. STANDARD SIEVE	PERCENT RETAINED (BY WEIGHT), ±2 PERCENT			
	Natural Sand		Manufactured Sand	
	Maximum	Minimum	Maximum	Minimum
No. 4 (4.75 mm)	0	0	0	0
No. 8 (2.36 mm)	10	0	10	0
No. 16 (1.18 mm)	40	10	40	10
No. 30 (600 μm)	65	30	65	30
No. 50 (300 μm)	90	70	80	60
No. 100 (150 μm)	100	95	90	75
No. 200 (75 μm)	100	97	100	90

2.2.3 Insulation Board:

2.2.3.1 Expanded Polystyrene Insulation Board: The expanded polystyrene (EPS) foam plastic insulation board shall have a nominal density of 1.5 pounds per cubic foot (24 kg/m³), with a maximum flame-spread rating of 25 and a smoke-developed rating not exceeding 450 when tested in accordance with UBC Standard 8-1 or ASTM E 84-98e1, in the thickness intended for use. Unbacked boards shall have a minimum nominal thickness of 1 inch (25 mm), with 3/8-inch (9.5 mm) projecting tongues and with compatible grooves for horizontal joints. See Figure 1 for joint detail. When foam plastic insulation boards are installed over solid substrates, a lesser thickness, non-tongue-and-groove board is permitted.

All boards must be recognized in a current ICBO ES evaluation report. See Section 2.8 for board identification.

2.2.3.2 R-Guard One Coat Stucco Board: The board is described in ICBO ES evaluation report ER-3414.

2.2.3.3 Extruded Polystyrene (XEPS) Insulation Board: The board has a nominal density of 1.5 pounds per square foot (24 kg/m³). See Section 2.2.3.1 for other details and requirements.

2.2.3.4 Fome-Cor Board Lathing Material: The board consists of a nominal 1/4-inch-thick (6.4 mm) extruded polystyrene (XEPS) foam plastic board and two layers of heavy-duty kraft paper liner board, and is described in ICBO ES evaluation report ER-3335.

2.2.4 Lath:

2.2.4.1 Wire Fabric Lath: Minimum No. 20 gage, 1-inch (25 mm) galvanized steel woven wire fabric. Wire fabric lath shall be self-furred when applied over solid substrates. When applied over open framing with unbacked foam plastic insulation board, the lath is not required to be furred. Self-[illegible] wire

1. The maximum overall wall coating thickness when using the minimum wire lath noted in Section 2.2.4 shall be 1/2 inch (12.7 mm).
2. Furring crimps shall occur in the wire at a maximum of 6-inch (152 mm) intervals each way. Furring crimps shall provide a minimum 1/8-inch (3.2 mm) clearance from the substrate after installation.

2.2.4.2 Metal Lath: Lath shall comply with ASTM C 847-93. Metal lath is minimum 1.75 pounds per square yard (0.67 kg/m²). Furring and self-furring requirements for lath shall be as stated in Section 2.2.4.1.

2.2.5 Gypsum Sheathing Board: Water-resistant core sheathing shall comply with ASTM C 79-92.

2.2.6 Dens-Glass® Gold Gypsum Board: The board is described in ICBO ES evaluation report ER-4305.

2.2.7 Fiberboard: Minimum 7/16-inch (1.1 mm) thickness, asphalt-impregnated fiberboard shall comply with ANSI/AHA A194.1 as a regular-density sheathing.

2.2.8 Plywood: Minimum 5/16-inch (7.9 mm) thickness with exterior glue is required for studs spaced a maximum of 16 inches (406 mm) on center. For studs spaced at 24 inches (610 mm) on center, 3/8-inch-thick (9.5 mm) plywood with exterior glue shall be used. Plywood shall comply with UBC Standard 23-2 (US DOC PS1-95). Plywood shall be installed in accordance with the code and should be installed in accordance with American Plywood Association recommendations requiring 1/8-inch (3.2 mm) spacing between sheets at ends and sides.

2.2.9 Oriented Strand Board (OSB): OSB shall comply with specifications for Exposure 1, performance-rated panels in UBC Standard 23-3 (US DOC PS2-92), and shall have a minimum thickness of 3/8 inch (9.5 mm). OSB shall be installed in accordance with the code and should be installed in accordance with American Plywood Association recommendations requiring 1/8-inch (3.2 mm) spacing between sheets at ends and sides.

2.2.10 ThermoPly Structural Sheathing: ThermoPly structural sheathing is described in ICBO ES evaluation report ER-1439.

2.2.11 Caulking: Caulking must be, at a minimum, acrylic latex material in compliance with ASTM C 834. Caulking requirements contained in this report refer only to those penetrations that occur directly in the stucco installation as described in this report. Caulking requirements listed are not intended to define all areas in the structure's assembly that may require caulk or sealant, and therefore should not be interpreted to mean that there is just one sealant required.

2.2.12 Weather-resistive Barrier: The weather-resistive barrier shall be minimum Grade "D" kraft building paper complying with UBC Standard 14-1 (Federal Specification UUB 790a); or asphalt-saturated rag felt complying with UL Standard 55-A; or a recognized weather-resistive barrier recognized in a current ICBO ES evaluation report, such as DuPont Tyvek Stucco Wrap (ICBO ES ER-4000), or Simplex Products R-Wrap Protective Housewrap (ICBO ES ER-4449). The weather-resistive barrier is required to be installed over all substrates except for foam plastic insulation boards, where the weather-resistive barrier is permitted to be installed over or under (behind) the foam plastic insulation board. The application of the weather-resistive barrier must comply with Section 1402.1 of the code. When applied over any wood-based sheathing, the weather-resistive barrier shall comply with Section 2506.4 of the code and shall consist of at least two layers of Grade D kraft building paper or one layer of tongue-and-groove EPS or XEPS foam plastic insulation described in Section 2.2.3.1 or Section 2.2.3.3, combined with one layer of Grade D kraft building paper with a minimum water resistance of 60 minutes.

2.2.13 Fibers: Glass, polypropylene, acrylic or nylon fibers are for short-term benefits during initial curing, and reduce sagging of material during application.

2.2.14 Admixtures: Proprietary ingredients are added to improve the quality and performance of the product.

2.2.15 Miscellaneous: All trims, screeds, corner reinforcement, etc., must be corrosion-resistant metal, approved plastic, or vinyl.

2.3 Installation:

2.3.1 General: The exterior cementitious coating shall be applied by hand-troweling or machine-spraying in one or two coats to a minimum 3/8-inch (9.5 mm) thickness. If application is direct to concrete or concrete masonry units, application shall comply with Section 2508.8 of the code and thickness shall conform to Table 25-D of the code, with the minimum thickness of the coating being 1/4 inch (6.4 mm). When applied over metal reinforcement, the lath shall be embedded in the coating and completely covered. The second or finish coat, if provided, shall be applied within seven days of application of the base coat. If not applied within seven days, the base coat shall have a bonding adhesive brushed or sprayed onto the base coat or a bonding treatment shall be added to the mix of the second coat prior to application over the base coat. The corrosion-resistant fasteners for the wire fabric lath or metal lath shall penetrate a minimum of 1 inch (25 mm) into wood framing members. If plywood or oriented strand board complying with Section 2.2.8 or 2.2.9 of this report is installed as a substrate, the boards and wood framing members may be combined in determining the 1-inch (25.4 mm) penetration requirement for the corrosion-resistant fasteners. Fasteners installed into steel framing members must penetrate these members a minimum of 1/4 inch (6.4 mm). Accessory component items such as weep screed and corner reinforcements shall be installed as stated in this report. Details of various components are provided in this report. The weather-resistive barrier shall be as described in Section 2.2.12 of this report. The coating shall be applied at ambient air temperatures between 35°F and 120°F (1.6°C and 49°C) by applicators approved by Magna Wall, Inc. A "sand" or "float" type finish is not recommended by the manufacturer for the single coat of fiber-reinforced stucco. After application, the coating shall be protected from freezing air temperatures during the initial six hours of curing. Where coating is field-mixed, an installation card, as illustrated in Figure 4 of this report, shall be provided on the jobsite by the applicator before the weather-resistive barrier or foam plastic insulation board is installed. This installation card must show the name and address of the applicator and the type of product to be installed.

2.3.2 Application over Open Framing:

2.3.2.1 Insulation Board: The weather-resistive barrier described in Section 2.2.12 of this report is placed over open wood or steel framing spaced a maximum of 24 inches (610 mm) on center, in accordance with Section 1402.1 of the code. Wall bracing in accordance with the code shall be installed. The foam plastic board as described in Section 2.2.3 shall be placed horizontally with the tongue facing upward in 2-foot-by-8-foot (610 mm by 2438 mm) sections and be temporarily held in place with galvanized roofing nails or staples. Code-approved screws shall be used to temporarily fasten the board to metal framing members. Vertical butt joints of this foam plastic board shall be staggered a minimum of one framing space from the adjacent courses and shall occur directly over a framing member. In areas where the foam plastic board meets areas where a solid substrate sheathing has been installed, the resulting nonstaggered butt joints at this intersection are permitted and must also occur over a vertical framing member. Areas that have solid substrates do not require foam plastic boards to be installed. If foam plastic board is installed over solid sheathing, a non-tongue-and-groove board of thickness less than 1 inch (25 mm) and density less than 1.5 pounds per cubic foot (24 kg/m³) is also permitted to be installed. The butt joints in the foam plastic insulation board that occur over areas where a solid substrate has been installed are not required to occur over vertical framing members, and the vertical joints are not required to be staggered.

The lath shall be installed over the foam plastic insulation board and be fastened through the board to wood framing with minimum 2-inch-long (51 mm), No. 11 gage [0.120 inch (3 mm) shank diameter), 3/8-inch-head-diameter (9.5 mm), galvanized roofing nails or No. 16 gage galvanized staples spaced at a minimum of 6 inches (152 mm) on center, with a minimum 1-inch (25 mm) penetration into the wood framing. Staples shall have a minimum 1/2-inch (12.7 mm) crown width. These staples shall be used in wood species with a minimum 0.42 specific gravity. For attachment of the system to wood framing of lesser density, staples with equivalent holding power and penetration to staples specified herein may be used as alternate fasteners to nails. The lath shall be fastened to steel framing members (minimum No. 20 gage) using No. 8 through 18, S-12, panhead, self-tapping screws spaced at a maximum of 6 inches (152 mm) on center. The screws shall penetrate the steel framing members at least 1/4 inch (6.4 mm). Wire lath over either wood or steel framing shall be applied with minimum 1-inch (25 mm) laps at both the side and the ends of the wire or one mesh, whichever is less. Metal lath shall be 1.75 pounds per square yard (0.67 kg/m²), minimum, with minimum 1/2-inch (12.7 mm) laps on the side and a 1-inch (25 mm) end lap.

Weep screeds shall comply with Section 2506.5 of the code and are installed at the foundation/sill junction with the foundation a minimum of 1 inch (25 mm) below the sill plate. The standard weep screed as shown in Figure 2 of this report shows the weather-resistive barrier, metal reinforcement and foam plastic board lap over the vertical attachment flange. Corrosion-resistant metal or plastic, 1 3/8-inch (35 mm) weep screed shall be installed at horizontal areas where the foam plastic insulation board would be exposed after installation of the coating is complete. Areas where vertical edges of foam plastic were to be exposed after coating installation is complete require only a 1 3/8-inch (35 mm) metal or vinyl casing bead; weep holes are not required at these areas. Penetrations in the exterior wall that do not have a flashing system installed require installation of caulk. Examples of areas that require caulk are electrical fixtures, plumbing fixtures, and drains. Fasteners do not require caulking.

At areas such as windows and doors, the foam plastic board may be angled or beveled at a 45-degree angle as shown in Figure 2 of this report, to allow the exterior coating to terminate properly at these areas. Round corners do not require additional corner reinforcement, as shown in Figure 2 of this report. The foam plastic board should be held back slightly at each side of the corner, as shown in the figure. If round corner reinforcement is installed, the foam plastic board is not required to be held back. Square wall and parapet corners shall be covered with metal corner reinforcement. Additional trim items such as decorative reveals in either galvanized metal or vinyl are permitted, and must be installed with grounds of compatible dimensions.

2.3.2.2 R-Guard One Coat Stucco Board: This insulation board incorporates the weather-resistive barrier integrally to the board and, when installed in accordance with ICBO ES evaluation report ER-3414, it eliminates the requirement for a weather-resistive barrier as stated in Section 2.2.12 of this report. All weather aspects of exterior coating installation shall be as stated in Section 2.3.2.1 of this report.

2.3.2.3 Foam-Cor Board: The Fome-Cor Board described in Section 2.2.3.4 of this report shall be fastened temporarily to the wood framing with galvanized staples or roofing nails. Minimum 1 1/2-inch (38 mm) by No. 17 gage woven wire fabric lath is attached through the Fome-Cor Board. Fasteners shall penetrate a minimum of 1 inch (25 mm) into wood framing. Magna Wall fiber-reinforced stucco shall then be applied in a minimum 1/2-inch-thick (12.7 mm) base coat. A minimum 1/8-inch-thick (3.2 mm) finish coat is applied over the base coat, resulting in a minimum overall thickness of 5/8 inch (15.9 mm). The base coat shall be cured in accordance with Section 2.7.3 of this report, prior to installation of the finish coat.

2.3.3 Application over Solid Substrates:

2.3.3.1 General: The substrates described in this section are all recognized for use. All solid substrates require installation of a weather-resistive barrier in compliance with Section 2.2.12, and wire fabric or metal lath in compliance with Sections 2.2.4.1 or 2.2.4.2. The use of foam plastic insulation board over solid substrates is optional. If foam plastic insulation board is utilized over solid substrates, the board may be non-tongue-and-groove and of lesser density and thickness, and the vertical foam joints are not required to be staggered or to occur over vertical framing members. If foam plastic insulation is used, the length of fasteners must be increased by the thickness of the foam board installed. For application over solid substrates, a weep screed is required to be installed at the foundation/sill junction a minimum of 1 inch (25 mm) below the sill plate, and shall comply with Section 2506.5 of the code. Details of this weep screed are shown in Figure 2 of this report. The weather-resistive barrier and metal lath must lap over the horizontal nailing edge of the weep screed and fully cover the solid substrate. Metal reinforcement is required for use on all exterior corners, square or round. All other trim and accessory items should be of compatible dimensions. Caulking requirements are as described in Section 2.2.11 of this report. Lath and coating shall be installed as stated in Section 2.3.1.

2.3.3.2 Exterior Gypsum Sheathing and Dens Glass Gold: Minimum 1/2-inch-thick (12.7 mm), water-resistant core gypsum sheathing or Dens Glass Gold shall be installed directly on wood or steel framing with studs spaced a maximum of 24 inches (610 mm) on center. The sheathing shall be fastened to the wood or metal framing as specified by approved plans and in accordance with all code requirements. A weather-resistive barrier consisting of a minimum of one layer of Grade D building paper shall be applied over the sheathing, or any other barrier complying with Section 2.2.12 of this report. The lath and coating shall be installed as described in Section 2.3.1 of this report. The lath shall be attached through the sheathing to the wood or metal framing members, as described in Section 2.3.1 of this report. Fasteners must penetrate the sheathing at least 1 inch (25 mm) into wood framing members and 1/4 inch (6.4 mm) into steel framing members. Accessory trim items such as weep screeds and corner aids should have compatible ground dimensions.

Metal-reinforced corners are required on exterior gypsum sheathing, round or square. Fasteners for the metal reinforcement must penetrate 1 inch (25 mm) into wood framing members and 1/4 inch (6.4 mm) into steel framing (minimum No. 20 gage studs).

2.3.3.3 Fiberboard: Minimum 7/16-inch-thick (11.1 mm) fiberboard sheathing may be installed directly over wood or steel framing spaced at a maximum of 24 inches (610 mm) on center. Walls shall be braced in compliance with the code. The fiberboard shall be temporarily held in place with corrosion-resistant staples, roofing nails, or screws. A weather-resistive barrier complying with Section 2.2.12 for wood-based sheathing must be installed over fiberboard. The lath shall be attached through the sheathing to the wood or metal framing members, as described in Section 2.3.1 of this report. Fasteners must penetrate the sheathing at least 1 inch (25 mm) into wood framing members and 1/4 inch (6.4 mm) into steel framing members. The coating shall be installed as described in Section 2.3.1 of this report. Caulking of penetrations shall be as described in Section 2.2.11 of this report. Metal reinforcement of corners shall comply with Section 2.3.3 of this report.

2.3.3.4 Plywood: Plywood shall comply with Section 2.2.8 of this report and is installed directly to wood or steel framing. The plywood shall be fastened to wood or steel framing as specified by approved plans and in accordance with all code requirements. The weather-resistive barrier shall comply with Section 2.2.12 of this report. Lath and coating shall be installed as described in Section 2.3.1 of this report.

2.3.3.5 Oriented Strand Board (OSB): Board shall be as described in Section 2.2.9 of this report, and shall be installed directly over wood or steel framing or steel framing. The OSB shall be fastened to the wood or steel framing as specified by approved plans and in accordance with all code requirements. The weather-resistive barrier shall comply with Section 2.2.12 of this report. The lath and coating shall be installed as described in Section 2.3.1 of this report.

2.3.3.6 ThermoPly Protective Sheathing: The ThermoPly shall be installed in accordance with ICBO ES evaluation report ER-1439. A weather-resistive barrier complying with Section 2.2.1.2 is required. The lath and coating shall be installed as described in Section 2.3.1 of this report.

2.4 One-hour Bearing-wall Fire-Resistive Assemblies:

2.4.1 General: All substrates individually listed for each of the listed fire-resistive assemblies may be used individually or in combination of these substrates, provided the installation is in compliance with the listed assembly. All of the one-hour bearing-wall fire-resistive assemblies detailed in this section are also permitted for use in nonbearing assemblies.

2.4.3 Assembly 2:

2.4.3.1 Interior Face: One layer of 5/8-inch (15.9 mm), Type X gypsum wallboard, complying with ASTM C 36-92, shall be attached to nominal 2-by-4 wood studs with 1 5/8-inch-long (41.3 mm) galvanized steel cuphead gypsum wallboard nails, having 0.3-inch (7.6 mm) head diameter and 0.010-inch (0.25 mm) shank diameter, spaced at a maximum of 8 inches (203 mm) on center on all studs and plates. Stud spacing shall be a maximum of 16 inches (406 mm) on center. The joints and nail heads shall be covered with paper tape and gypsum compound; fastener heads shall also be treated with gypsum compound. The stud cavities shall be filled with R-11 fiberglass insulation having a maximum density of 0.5 pcf (8 kg/m³), or R-11 rockwool batt insulation having a minimum density of 1.45 pcf (23 kg/m³).

2.4.3.2 Exterior Face: One layer of 7/16-inch-thick (11.1 mm) oriented strand board, with the long side parallel to framing members. The material properties are described in Section 2.2.9 of this report, and the substrates shall be installed on wood framing as described in Section 2.3.3 of this report. The weather-resistive barrier, lath and coating shall be applied to the substrate as described in Section 2.3.1 or 2.3.3 of this report.

2.4.3.3 Design: The wood axial stress is limited to 0.78 F'_c and shall not exceed 0.78 F'_c at an l_e/d ratio of 33. The maximum load on the system described in Section 2.4.3 of this report is 1,100 pounds (4895 N) per stud or 45 percent of the maximum allowable load permitted for the wood species, based on calculations in accordance with Chapter 23 of the code.

F'_c = Allowable unit stress in compression parallel to the grain adjusted for l_e/d ratio.
l_e = Effective length of compression member, inches.
d = Least dimension, inches.

These design details only apply to the assembly described in Section 2.4.3.

2.4.4 Assembly 3:

2.4.4.1 Interior Face: One layer of 5/8-inch-thick (15.9 mm), Type X gypsum wallboard, complying with ASTM C 36-92, shall be attached to nominal 2-by-4 wood studs with 1 5/8-inch (41.3 mm) galvanized steel cuphead gypsum wallboard nails having 0.3-inch (7.6 mm) head diameter and 0.010-inch (0.25 mm) shank diameter, spaced at a maximum of 6 inches (152 mm) on center on all studs and plates. Stud spacing shall be a maximum of 16 inches (406 mm) on center. The joints and nail heads shall be covered with paper tape and gypsum compound; fastener heads shall also be treated with gypsum compound. The stud cavities shall be filled with R-11 fiberglass insulation having a minimum density of 0.5 pcf (8 kg/m³), or R-11 rockwool batt insulation having a minimum density of 1.45 pcf (23 kg/m³).

2.4.4.2 Exterior Face: One layer of 7/16-inch-thick (11.1 mm) plywood with the long side parallel to framing members. The material properties are described in Section 2.2.8 of this report, and the substrates shall be installed on wood framing as described in Section 2.3.3 of this report. The weather-resistive barrier, lath and coating shall be applied to the substrate as described in Section 2.3.1 or 2.3.3 of this report.

2.4.4.3 Design: The wood axial stress is limited to 0.78 F'_c and shall not exceed 0.78 F'_c at an l_e/d ratio of 33. The maximum load on the system described in Section 2.4.4 of this report is 1,100 pounds (4895 N) per stud or 45 percent of the maximum allowable load permitted for the wood species, based on calculations in accordance with Chapter 25 of the code:

F'_c = Allowable unit stress in compression parallel to the grain adjusted for l_e/d ratio.
l_e = Effective length of compression member, inches.
d = Least dimension, inches.

These design details only apply to the assembly described in Section 2.4.4.

2.4.5 Assembly 4:

2.4.5.1 Interior Face: One layer of 5/8-inch-thick (15.9 mm), Type X gypsum wallboard, complying with ASTM C 36-92, shall be attached to nominal 2-by-4 wood studs with 1 5/8-inch-long (41.3 mm), galvanized steel, cuphead gypsum wallboard nails having 0.30-inch (7.6 mm) head diameter and 0.010-inch (0.25 mm) shank diameter, spaced a maximum of 8 inches (203 mm) on center on all studs and plates. Stud spacing shall be a maximum of 16 inches (406 mm) on center. The joints shall be covered with paper tape and gypsum compound. Fastener heads shall also be treated with gypsum compound. The stud cavities shall be filled with R-11 rockwool batt insulation having a minimum density of 1.45 pcf (23 kg/m³), or R-11 fiberglass insulation having a minimum density of 0.5 pcf (8 kg/m³).

2.4.5.2 Exterior Face: One layer of 1/2-inch-thick (12.7 mm), water-resistant core gypsum sheathing. The material properties are described in Section 2.2 of this report, and the substrates shall be installed on wood framing as described in Section 2.3.3 of this report. The weather-resistive barrier, lath and coating shall be applied to the substrates as described in Section 2.3.1 or 2.3.3 of this report.

2.4.5.3 Design: The wood axial stress is limited to 0.78 F'_c and shall not exceed 0.78 F'_c at an l_e/d ratio of 33. The maximum load on the system described in Section 2.4.5 of this report is 1,600 pounds (7117 N) per stud or 65 percent of the maximum allowable load permitted for the wood species, based on calculations in accordance with Chapter 25 of the code.

F'_c = Allowable unit stress in compression parallel to the grain adjusted for l_e/d ratio.
l_e = Effective length of compression member, inches.
d = Least dimension, inches.

These design details only apply to the assembly described in Section 2.4.5.

2.6 Shear Wall Applications:

The following assembly construction requirements shall be met in order to obtain the shear value noted in Section 2.6.3.

2.6.1 Interior Face: Minimum 1/2-inch-thick (12.7 mm) gypsum wallboard, complying with ASTM C-36-92, is fastened to nominal 2-by-4 wood studs at 16 inches (406 mm) on center. Fasteners shall be 1 5/8-inch-long (41.3 mm) barbed gypsum wallboard nails fastened to framing at a maximum of 6 inches (152 mm) on center. Gypsum wallboard shall be placed horizontally or vertically, with edges blocked.

2.6.2 Exterior Face: The weather-resistive barrier, 1-inch-thick (25 mm) foam plastic, lath and coating, shall be applied in accordance with Section 2.3 of this report.

2.6.3 Shear Value: The allowable shear value is 190 pounds per foot (2774 N/m) based on a 1:1 height-to-width ratio. For structures in Seismic Zones 3 and 4, the allowable shear is limited to 95 pounds per foot (1387 N/m).

2.7 Miscellaneous:

2.7.1 Inspection Requirements: Lath inspections shall be conducted in accordance with Section 108.5.5 of the code.

2.7.2 Control Joints: Control joints are to be installed as specified by the architect, designer, builder or structural engineer. Control joints are allowed to be installed on top of the metal lath or woven wire. Control joint installation does not require the lath or wire to be cut or broken.

2.7.3 Curing: Moisture curing by fogging the finished wall lightly with water is required for a minimum of 48 hours after coating application. The fogging shall occur as often and as long as necessary to assure cement hydration.

2.7.4 Soffits: To apply stucco products on soffit areas greater than 12 inches (305 mm) in width, the coating shall be reinforced with metal lath complying with Section 2.2.4.2 of this report. Soffit areas 12 inches (305 mm) or less in width may utilize a minimum No. 20 gage galvanized wire over any approved substrate. All soffits that have metal lath installed, complying with the above-referenced specification or the code, may be utilized over open framing or any approved substrate, regardless of the soffit dimension. If substrates are installed in soffit areas, fastener lengths shall be increased by the thickness of the substrates as listed by the above-referenced specification, except when plywood or OSB in compliance with Sections 2.2.8 and 2.2.9 of this report are installed at the substrate.

2.7.5 Sills: For all sill depths of 6 inches (152 mm) or less, the coating and lath are applied over any substrate, provided the coating, lath, weather-resistive barrier and substrates are installed in accordance with this report. Sills with depths exceeding 6 inches (152 mm) shall have solid wood, plywood, or oriented strand board substrates. The substrate shall be fastened in accordance with the code, with a layer of weather resistive barrier then being applied as described in Section 2.3.2.1. The weather-resistive barrier, coating, lath and optional foam plastic insulation board shall be installed in accordance with Sections 2.3.1 and 2.3.2 of this report. The coating on sills should always be applied to finish with a gradual slope in the sill surface sloping away from the structure, to allow water to drain out and not pool or collect in these areas.

2.7.6 Projections: Decorative foam plastic shapes and projections may be installed with the size, location, design, and method of attachment to be determined by the design professional and approved by the building official. The foam plastic must comply with Section 2602 of the UBC. If the foam plastic projections are to be covered with metal reinforcement and mechanically fastened to the framing members and then covered with Magna Wall Fiber-reinforced Stucco, the fasteners must penetrate wood framing members a minimum of 1 inch (25 mm) and steel framing members a minimum of 1/4 inch (6.4 mm). If woven wire lath is utilized, the fasteners should be corrosion-resistant large-head or cap-type fasteners. The projections shall be fastened to the framing members at a maximum spacing of 6 inches (152 mm) on center. The foam plastic projections may be prewrapped completely with metal reinforcement then applied to the structure. These pieces may be butt-jointed with no additional reinforcement required. The coating shall then be installed in accordance with Section 2.3.1 of this report. Decorative foam plastic shapes and projections may also be installed over the Magna Wall coating by adhering the projections utilizing products as specified by the design professional or system applicator and approved by the building official. The installation and coating of these adhered foam projections must be in accordance with the current evaluation report and manufacturers instructions for the product specified or chosen for use. The structural capacity of fasteners and adhesives shall comply with the UBC.

2.8 Identification:

The factory-blended mixture is delivered to jobsites in 80-pound (36 kg), water-resistant bags, with labels bearing the following information: name and address of manufacturer, the evaluation report number (ICBO ES ER-4776), identification of components, weight of packaged mix, storage instructions, minimum amounts of water and other components that may be added and conditions that must be considered in determining the actual amount, and curing instructions. The bulk mixer label shall show information as noted in Section 2.2.1.

Foam plastic insulation boards are identified in accordance with their respective ICBO ES evaluation reports. Additionally, the board density must be noted.

Design No. L577

Fire Resistance Ratings - ANSI/UL 263
July 09, 2010

Unrestrained Assembly Rating - 2 Hr

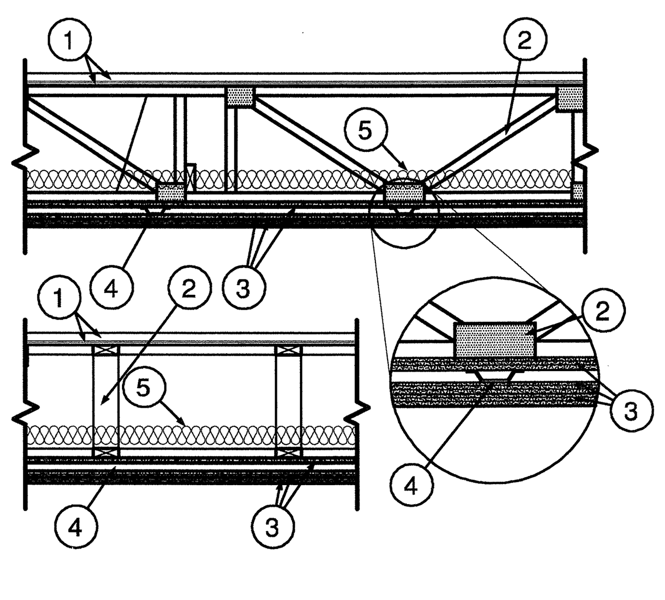

1. Flooring Systems — The flooring system shall consist of one of the following:

System No. 1

Subflooring— Nom 23/32 in. thick wood structural panels installed perpendicular to trusses with end joints staggered. Plywood or panels secured to trusses with construction adhesive and No. 6d ringed shank nails, spaced 12 in. OC along each truss. Staples having equal or greater withdrawal and lateral resistance strength may be substituted for the 6d nails.

Vapor Barrier — (Optional) - Nom 0.030 in. thick commercial asphalt saturated felt.

Floor Mat Materials* — (Optional) - Min 3/8 in. to max 3/4 in. thick floor mat material loose laid over the subfloor.

UNITED STATES GYPSUM CO — LEVELROCK® Brand Sound Reduction Board

Alternate Floor Mat Materials* — (Optional) - Nom 1/4 in. thick floor mat material loose laid over the subfloor. Floor topping thickness shall be as specified under Floor Topping Mixture.

UNITED STATES GYPSUM CO — LEVELROCK® Brand Floor Underlayment SRM-25

Alternate Floor Mat Materials* — (Optional) - Nom 3/8 in. thick floor mat material loose laid over the subfloor.

SOLUTIA INC — Type SC50

Finish Flooring — Floor Topping Mixture* — Min 1/2 in. thickness of floor topping mixture having a min compressive strength of 1200 psi. Refer to manufacturer's instructions accompanying the material for specific mix design.

UNITED STATES GYPSUM CO — Type LRK

System No. 2

Subflooring— Nom 23/32 in. thick wood structural panels installed perpendicular to trusses with end joints staggered. Plywood or panels secured to trusses with construction adhesive and No. 6d ringed shank nails, spaced 12 in. OC along each truss. Staples having equal or greater withdrawal and lateral resistance strength may be substituted for the 6d nails.

Vapor Barrier ——(Optional) - Nom 0.030 in. thick commercial asphalt saturated felt.

Floor Mat Materials* — (Optional) - Min 3/8 in. to max 3/4 in. thick floor mat material loose laid over the subfloor.

UNITED STATES GYPSUM CO — LEVELROCK® Brand Sound Reduction Board

Alternate Floor Mat Materials* — (Optional) - Nom 1/4 in. thick floor mat material loose laid over the subfloor. Floor topping thickness shall be as specified under Floor Topping Mixture.

UNITED STATES GYPSUM CO — LEVELROCK® Brand Floor Underlayment SRM-25

Alternate Floor Mat Materials* — (Optional) - Nom 3/8 in. thick floor mat material loose laid over the subfloor.

SOLUTIA INC — Type SC50

Finish Flooring — Floor Topping Mixture* — Min 1/2 in. thickness of floor topping mixture having a min compressive strength of 3000 psi. Refer to manufacturer's instructions accompanying the material for specific mix design.

UNITED STATES GYPSUM CO — Type HSLRK

System No. 3

Subflooring — Min 15/32 in. thick wood structural panels, min grade "C-D" or "Sheathing". Face grain of plywood or strength axis of panels to be perpendicular to the joists with joints staggered.

Vapor Barrier — (Optional) - Commercial asphalt saturated felt, 0.030 in. thick.

Vapor Barrier — (Optional) - Nom 0.010 in. thick commercial rosin-sized building paper.

Finish Flooring — Min 3/4 in. thickness of lightweight insulating concrete with Perlite Aggregate* or Vermiculite Aggregate*, or gypsum concrete.

See Perlite Aggregate (CFFX) and Vermiculite Aggregate (CJZZ) categories for names of manufacturers.

Floor Mat Materials* — (Optional) - Nom. 1/4 in. thick loose laid over the subfloor. Floor topping thickness shall be a minimum of 3/4 in.

KEENE BUILDING PRODUCTS CO INC — Type Quiet Qurl 55/025 and Quiet Qurl 55/025 N

Alternate Floor Mat Materials* — (Optional) - Floor mat material Nom. 3/8 in. thick loose laid over the subfloor. Floor topping thickness shall be a minimum of 1 in.

KEENE BUILDING PRODUCTS CO INC — Type Quiet Qurl 60/040 and Quiet Qurl 60/040 N

Alternate Floor Mat Materials* — (Optional) - Floor mat material Nom. 3/4 in. thick loose laid over the subfloor. Floor topping thickness shall be a minimum of 1-1/2 in.

KEENE BUILDING PRODUCTS CO INC — Type Quiet Qurl 65/075, Quiet Qurl 65/075 N

Alternate Floor Mat Materials* — (Optional) - Floor mat material Nom. 1/8 in. thick loose laid over the subfloor. Floor topping thickness shall be a minimum of 3/4 in.

KEENE BUILDING PRODUCTS CO INC — Type Quiet Qurl 52/013 and Quiet Qurl 52/013 N

Alternate Floor Mat Materials* — (Optional) - Floor mat material Nom. ¼ in. entangled net core with a compressible fabric attached to the bottom loose laid over the subfloor. Floor topping thickness shall be a minimum of 1 in.

KEENE BUILDING PRODUCTS CO INC — Quiet Qurl 55/025 MT and Quiet Qurl 55/025 N MT

2. Trusses — Parallel chord trusses, spaced a max of 24 in. OC, fabricated from nom 2 by 4 lumber, with lumber oriented vertically or horizontally. Min truss depth is 12 in. Truss members secured together with min 0.0356 in. thick galv steel plates. Plates have 5/16 in. long teeth projecting perpendicular to the plane of the plate. The teeth are in pairs facing each other (made by the same punch), forming a split tooth type plate. Each tooth has a chisel point on its outside edge. These points are diagonally opposite each other for each pair. The top half of each tooth has a twist for stiffness. The pairs are repeated on approx. 7/8 in. centers with four rows of teeth per inch of plate width.

3. Gypsum Board* — Three layers of 5/8 in. thick by 4 ft wide gypsum board. Top layer boards installed with the long dimension perpendicular to trusses with end joints located under bottom of trusses. End joints in adjacent rows shall be staggered on adjacent trusses . Top layer boards secured to bottom chord of trusses with 1-5/8 in. long Type S bugle head screws, spaced max 8 in. OC. Screws located 1-1/2 to 2 in., and 3/4 in. from side and end joints, respectively. Bottom two layers of gypsum board installed perpendicular to furring channels with end joints centered on the furring channels. Middle layer boards secured to each furring channel with 1 or 1-1/4 in. long Type S-12 bugle head steel screws spaced max 8 in. OC. Screws located 1-1/2 to 2 in. and 5/8 to 3/4 in. from side and end joints, respectively. Face layer boards secured to each furring channel through the middle layer with 1-5/8 or 1-7/8 in. long Type S-12 bugle head steel screws, spaced a max of 8 in. OC. Screws located 1-1/2 to 2 in. and 5/8 to 3/4 in. from side and end joints, respectively. End joints and side joints of the face layer boards shall be staggered a min of 16 in. from the joints in the middle layer. If end joints of the face layer boards are not centered on the furring channels, the end of boards at the end joint shall be attached to the middle layer boards with 1-1/2 in. long Type G steel screws spaced 8 in. OC and located 1-1/2 in. from the end joint. All screws shall be driven no further than flush with the face of the boards in order not to damage the core of the boards.

CANADIAN GYPSUM COMPANY — Types C, IP-X2, IPC-AR.

UNITED STATES GYPSUM CO — Types C, IP-X2, IPC-AR.

USG MEXICO S A DE C V — Types C, IP-X2, IPC-AR.

4. Furring Channels — Resilient channels, 1/2 in. deep, or inverted hat type furring channels, 7/8 in. deep, formed from 0.019 in. thick galv steel, spaced 16 in. OC perpendicular to trusses. Channels secured to each truss with 1-7/8 in. long Type S steel screws.

5. Batts and Blankets* — Any glass fiber or mineral wool insulation bearing the UL Classification Marking as to Surface Burning Characteristics and/or Fire Resistance. Insulation secured against the subflooring, held suspended in the concealed space or draped over the resilient channels (or furring channels) and gypsum panel membrane. There is no limit in the overall thickness of insulation.

5A. Loose Fill Material* — As an alternate to Item 5, any loose fill material bearing the UL Classification Marking for Surface Burning Characteristics. There is no limit in the overall thickness of insulation.

6. Finishing System — (Not Shown) - Vinyl, dry or premixed joint compound, applied in two coats to joints and screw-heads. Nom 2 in. wide paper tape embedded in first layer of compound over all joints. As an alternate, nom 3/32 in. thick veneer plaster may be applied to the entire surface of gypsum board.

*Bearing the UL Classification Mark

Last Updated on 2010-07-09

PLEASE REFER TO UL.COM FOR MOST UP-TO-DATE UL REVISIONS

REGISTERED ARCHITECT — STATE OF TEXAS — 22433

08-22-2011

REVISIONS

KELLER SPRINGS LOFTS
LOFT APARTMENTS IN ADDISON, TEXAS

ISSUED
AUGUST 22, 2011

BGO architects
4144 N. Central Expy.
Suite 855
Dallas, TX 75204
214.520.8878
bgoarchitects.com

COPYRIGHT © Beeler Guest Owens Architects ALL RIGHTS RESERVED

DATE
08-05-2011

PROJECT
11129

SHEET NUMBER
14.3

ER-4776, U.L. L577
FIRE PROTECTION