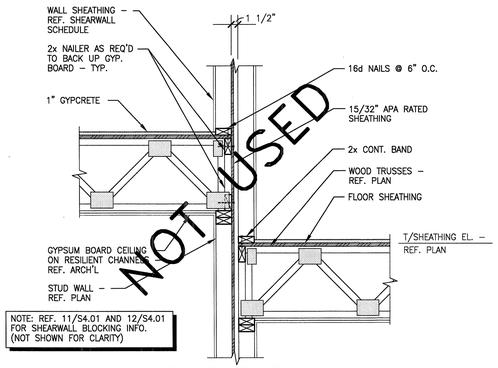

1 S4.04 TENANT SEPARATION WALLS (TRUSSES PERPENDICULAR TO WALL)
NO SCALE

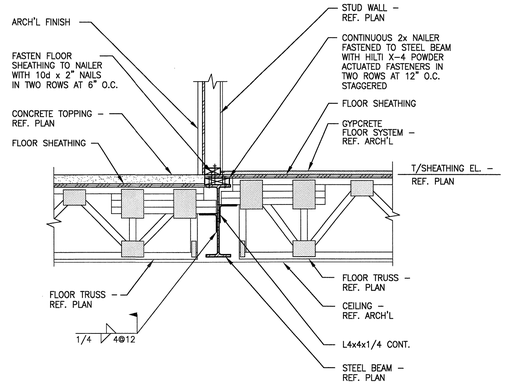

2 S4.04 SECTION
NO SCALE

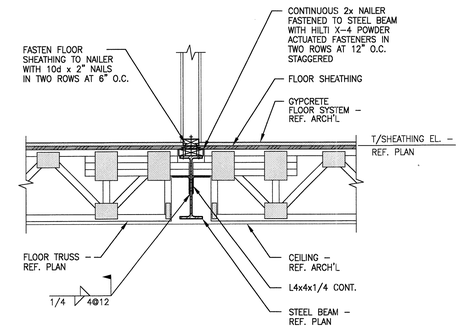

3 S4.04 SECTION
NO SCALE

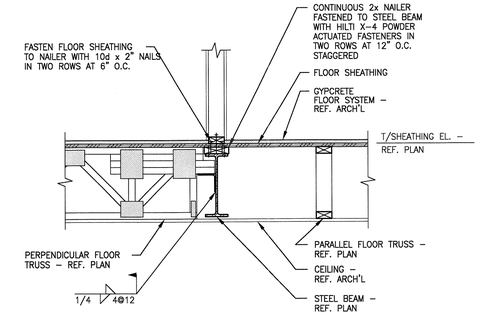

4 S4.04 SECTION
NO SCALE

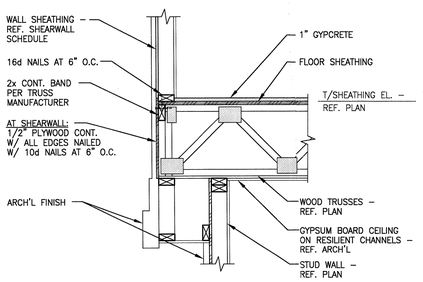

5 S4.04 TYPICAL EXTERIOR WALL DETAL (TRUSSES PERPENDICULAR TO WALL)
NO SCALE

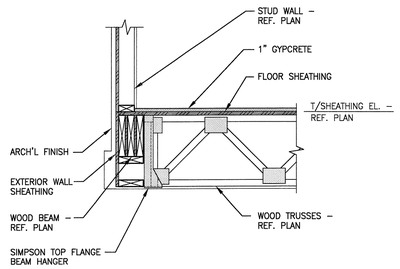

6 S4.04 SECTION
SCALE: 3/4"=1'-0"

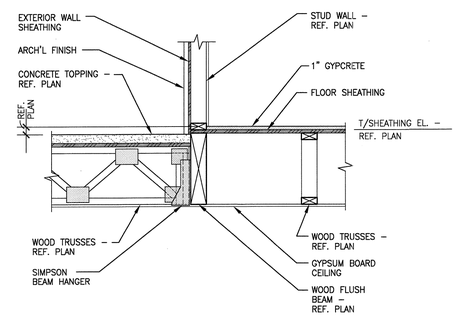

7 S4.04 TYPICAL FLOOR TRUSS TO FLUSH BEAM CONNECTION
NO SCALE

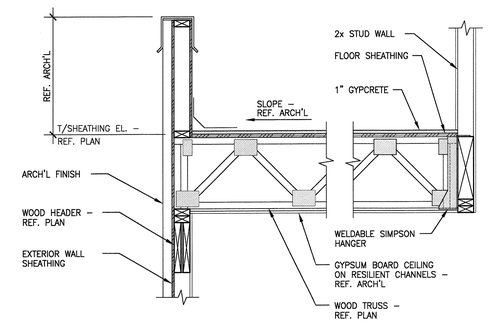

8 S4.04 SECTION
NO SCALE

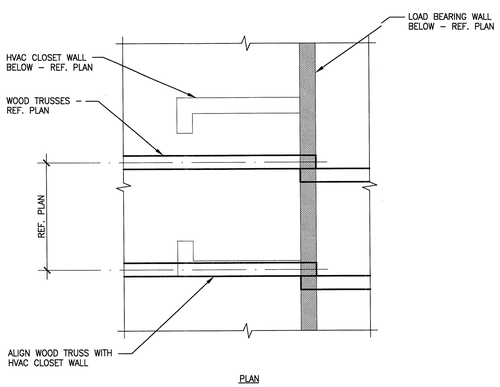

9 S4.04 TYPICAL TRUSS LAYOUT AT HVAC CLOSET
NO SCALE

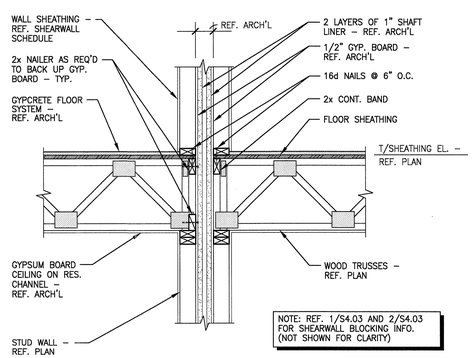

10 S4.04 2 HOUR TENANT SEPARATION WALLS (TRUSSES PERPENDICULAR TO WALL)
NO SCALE

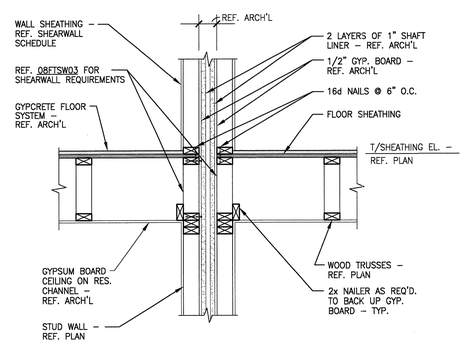

11 S4.04 2 HOUR TENANT SEPARATION WALLS (TRUSSES PARALLEL TO WALL)
NO SCALE

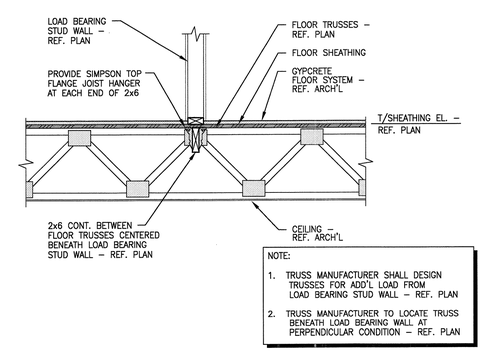

12 S4.04 SECTION
NO SCALE

THE SEAL APPEARING ON THIS DOCUMENT WAS AUTHORIZED BY R. TRENT PERKINS, P.E. 84264

THIS DOCUMENT IS THE RENDERING OF A PROFESSIONAL SERVICE, THE ESSENCE OF WHICH IS THE PROVIDING OF ADVICE, JUDGEMENT, OPINION, OR SIMILAR PROFESSIONAL SKILL.

PARKIN · PERKINS · OLSEN
CONSULTING ENGINEERING, INC.
9330 LBJ Freeway Suite 1055
Dallas, Texas 75243
Tel 214.221.2220 Fax 214.221.2252
Project No. 39155
Registration No. F-1479

REVISIONS

KELLER SPRINGS LOFTS

LOFT APARTMENTS IN ADDISON, TEXAS

CONSTRUCTION ISSUE
10-17-2011

BGO architects
4144 N. Central Expy., Suite 855
Dallas, TX 75204
214.520.8878
bgoarchitects.com

DATE
08-05-2011

PROJECT
11129

SHEET NUMBER
S4.04