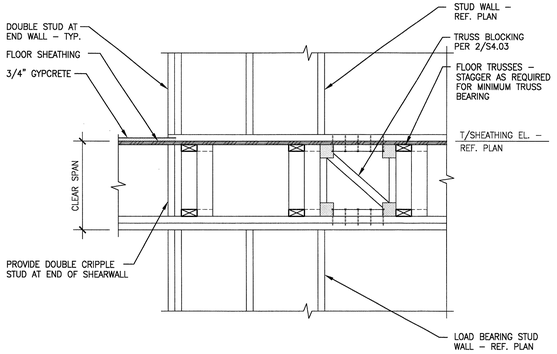

1 S4.03 TYPICAL INTERIOR SHEARWALL DETAIL (TRUSSES PERPENDICULAR TO WALL)
NO SCALE

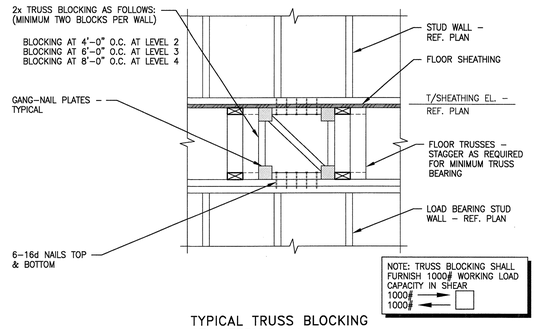

2 S4.03 TYPICAL TRUSS BLOCKING AT INTERIOR SHEARWALL (TRUSSES PERPENDICULAR TO WALL)
NO SCALE

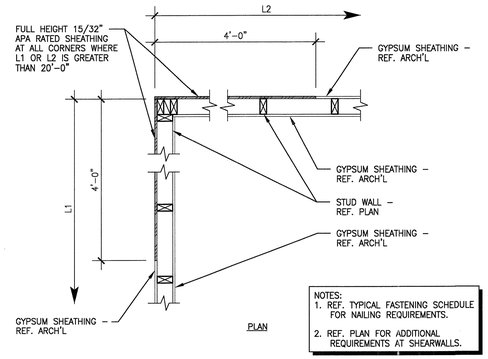

3 S4.03 TYPICAL EXTERIOR CORNER BRACING DETAIL
NO SCALE

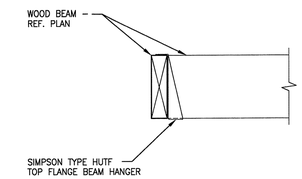

4 S4.03 TYPICAL WOOD BEAM TO BEAM CONNECTION
NO SCALE

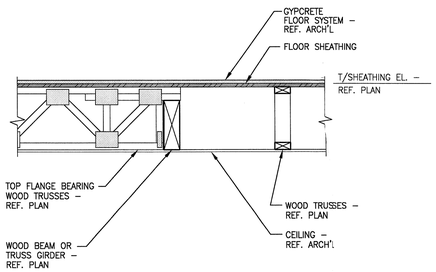

5 S4.03 TYPICAL FLOOR TRUSS TO FLUSH BEAM CONNECTION
NO SCALE

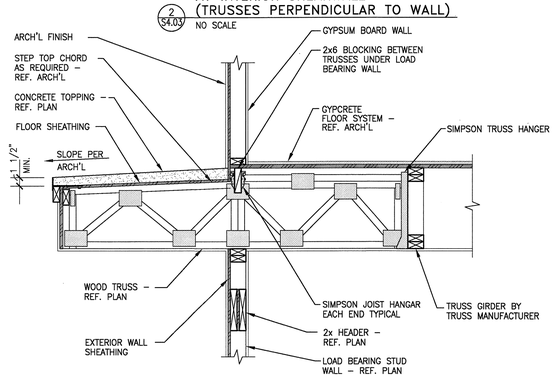

6 S4.03 SECTION
NO SCALE

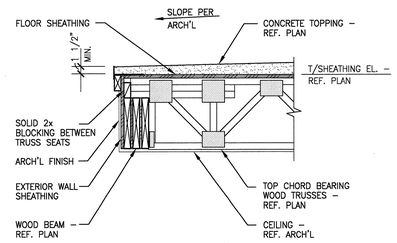

7 S4.03 SECTION
SCALE: 3/4"=1'–0"

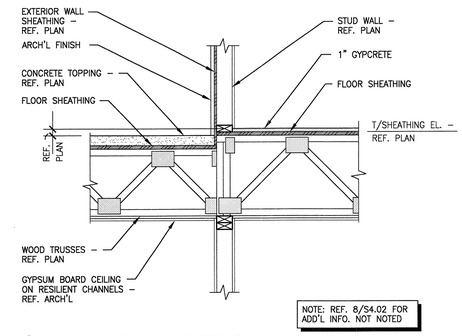

8 S4.03 TYPICAL EXTERIOR LOAD BEARING WALL DETAIL (TRUSSES PERPENDICULAR TO WALL)
NO SCALE

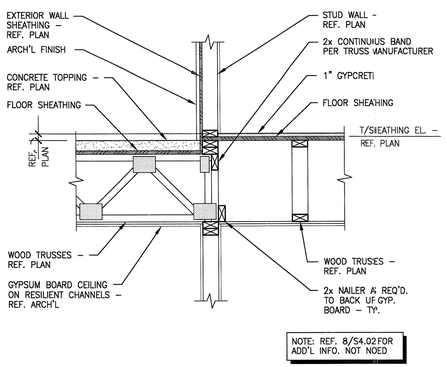

9 S4.03 SECTION
NO SCALE

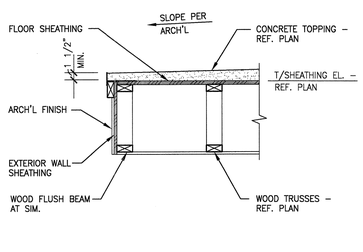

10 S4.03 SECTION
NO SCALE

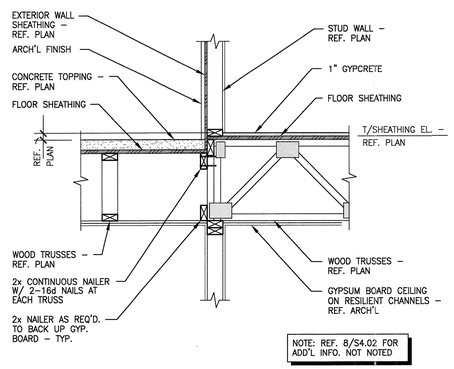

11 S4.03 SECTION
NO SCALE

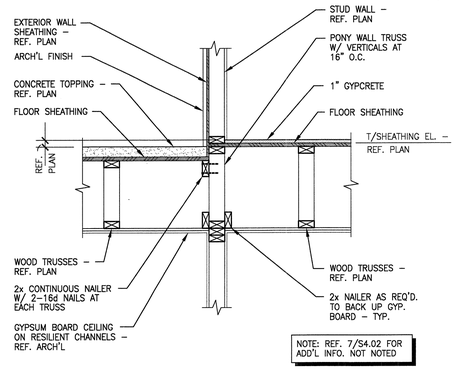

12 S4.03 SECTION
SCALE: 3/4"=1'–0"

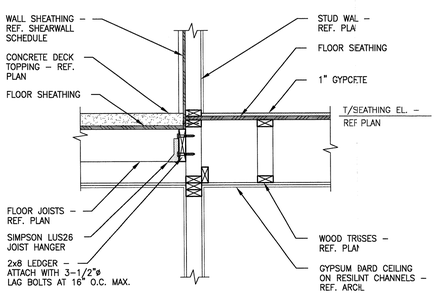

13 S4.03 SECTION
NO SCALE

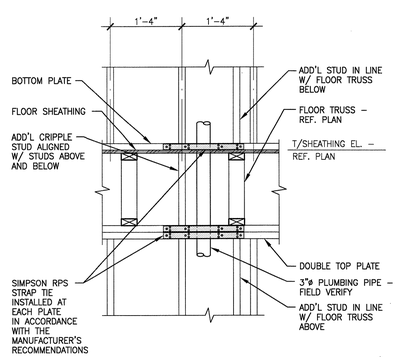

14 S4.03 TYPICAL PLATE REPAIR DETAIL AT PLUMBING PENETRATION
NO SCALE

STATE OF TEXAS
R. TRENT PERKINS
84264
REGISTERED PROFESSIONAL ENGINEER
10/21/11

THE SEAL APPEARING ON THIS DOCUMENT WAS AUTHORIZED BY R. TRENT PERKINS, P.E. 84264

THIS DOCUMENT IS THE RENDERING OF A PROFESSIONAL SERVICE, THE ESSENCE OF WHICH IS THE PROVIDING OF ADVICE, JUDGEMENT, OPINION, OR SIMILAR PROFESSIONAL SKILL.

PPO
PARKIN · PERKINS · OLSEN
CONSULTING ENGINEERING, INC.
9330 LBJ Freeway Suite 1055
Dallas, Texas 75243
Tel 214.221.2220 Fax 214.221.2252
Project No. 39155
Registration No. F-1479

REVISIONS

KELLER SPRINGS LOFTS

LOFT APARTMENTS IN ADDISON, TEXAS

CONSTRUCTION ISSUE
10-17-2011

BGO architects
4144 N. Central Expy., Suite 855
Dallas, TX 75204
214.520.8878
bgoarchitects.com

DATE
08-05-2011

PROJECT
11129

SHEET NUMBER
S4.03