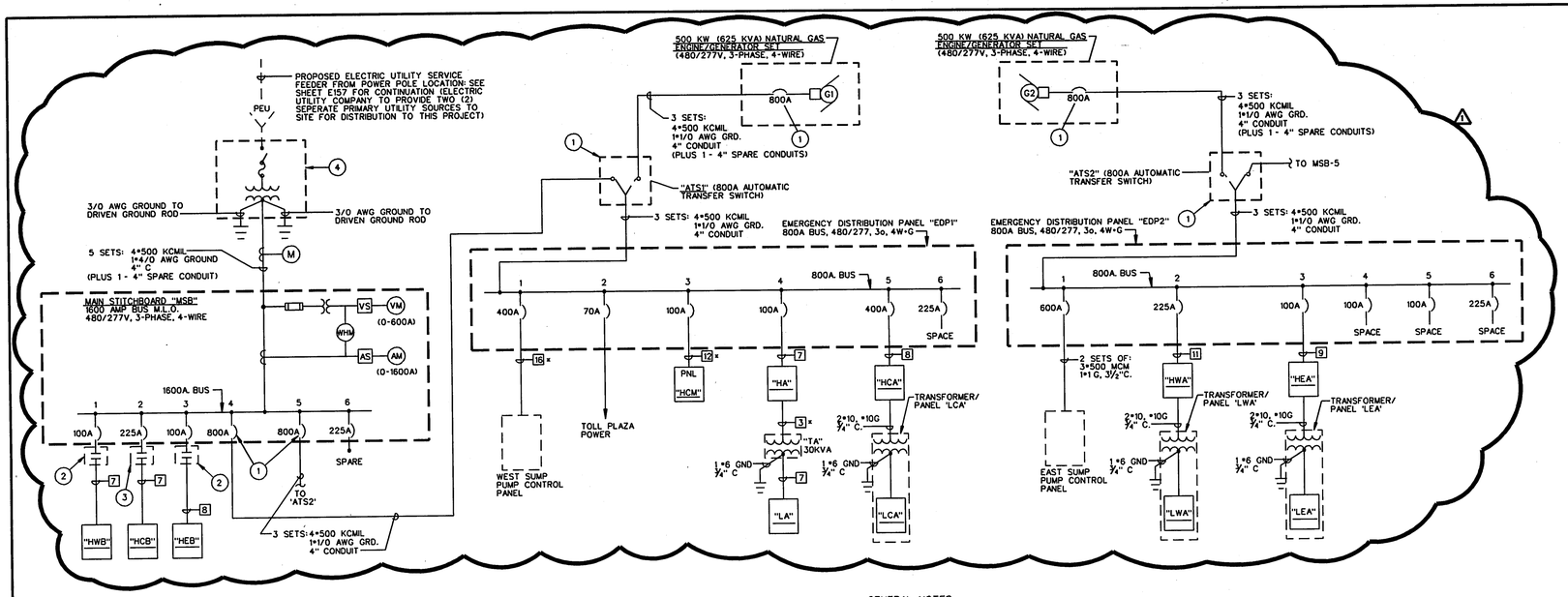

1 / E161 TUNNEL ONE-LINE DISTRIBUTION DIAGRAM
NO SCALE

GENERAL NOTES:

A. WHERE FEEDERS ARE IN EXCESS OF 400 FT. AND/OR CONDUIT RUNS REQUIRE 360 DEGREE OR MORE OF BENDING RADIUS, PULL-BOXES SHALL BE PROVIDED IN ACCORDANCE WITH ARTICLE 370 OF THE NATIONAL ELECTRICAL CODE, ARTICLE 370.

KEY NOTES:

1. FULLY-RATED CIRCUIT BREAKER/ATS.
2. PANELBOARD CONTACTOR (ASCO MODEL NO. 920-3-100-9 OR APPROVED EQUAL) CONTROLLED BY PHOTOCELL LOCATED AT EXTERIOR OF ELECTRICAL ROOM, RE: SHEET 1/E160.
3. PANELBOARD CONTACTOR (ALSO MODEL No. 920-3-22J-9 OR APPROVED EQUAL) CONTROLLED BY PHOTOCELL LOCATED AT EXTERIOR OF ELECTRICAL RM. REF: SHEET 1/E160.
4. ELECTRIC UTILITY CO. PROVIDED AND INSTALLED PAD MOUNTED TRANSFORMER. CONTRACTOR SHALL PROVIDE XFR PAD FOR UTILITY STDS. & PRIMARY SERVICE CONDUITS/RISER TO POLE. UTILITY CO. WILL PRIVIDE PRIMARY SERVICE CONDUCTORS TO TRANSFORMER AND WILL MAKE ALL PRIMARY AND SECONDARY CONDUCTORS CONNECTIONS TO TRANSFORMER.

MAIN SWITCHBOARD "MSB"

BREAKER: "MLO"
MINIMUM AC RATING: 35,000A
LOCATION: ELECTRICAL ROOM

VOLTAGE: 480V/277, 3 - PH, 4 - WIRE
MAINS: 1600A

DEVICE AMPS TRIP	DEVICE POLES	BRANCH CIRCUIT DESIGNATION	BRANCH CIRCUIT VOLT-AMPS	BRANCH CIRCUIT NO.	PHASE LOAD (VOLTS-AMPS) ØA	ØB	ØC	BRANCH CIRCUIT NO.	BRANCH CIRCUIT VOLT-AMPS	BRANCH CIRCUIT DESIGNATION	DEVICE POLES	DEVICE AMPS TRIP
100	3	PANEL "HWB"	12532	1				2	1504	PANEL "HCB"	3	225
			12532						1504			
			12532						-			
100	3	PANEL "HEB"	12532	3				4	159671	PANEL "EDP1"	3	800
			12532						159671			
			12532						159671			
				5				6	156525	PANEL "EDP2"	3	800
									156525			
									156525			
		TOTAL CONNECTED	1023780									

FEEDER SCHEDULE

SYMBOL	CONDUCTORS	CONDUIT
1	4*10 + *10 GROUND	¾"
2	4*8 + *10 GROUND	1"
3	4*6 + *8 GROUND	1¼"
4	4*4 + *8 GROUND	1¼"
5	4*3 + *8 GROUND	1¼"
6	4*2 + *6 GROUND	1½"
7	4*1 + *6 GROUND	2"
8	4*1/0 + *6 GROUND	2"
9	4*2/0 + *6 GROUND	2"
10	4*3/0 + *6 GROUND	2½"
11	4*4/0 + *4 GROUND	2½"
12	4*250 + *4 GROUND	3"
13	4*300 + *4 GROUND	3"
14	4*350 + *3 GROUND	3"
15	4*400 + *3 GROUND	3"
16	4*500 + *3 GROUND	3½"

NOTES:
1. WIRES SIZES ARE BASED ON N.E.C. TABLE 310-16 AMPACITIES FOR AWG COPPER CONDUCTORS WITH 75° C INSTALLATION.
* 2. DENOTES "OMITS NEUTRAL CONDUCTORS"

MOTOR FEEDER SCHEDULE

COPPER CONDUCTORS, 75° C INSULATION

DESIGNATION	HORSE POWER	C.B. TRIP AT 480V, 3Ø	MINIMUM "NEMA MOTOR STARTER SIZE" (SEE NOTE 3)	DISCONECT SWITCH SIZE (SEE NOTE 3)	TIME DELAY FUSE SIZE (WHERE REQ'D.)	CONDUIT AND WIRE SIZE (UNLESS INDICATED OTHERWISE)
1	1/2, 3/4, 1, 1 1/2, 2	15A	1	3P-30	(SEE NOTE 2)	¾"C., 3*10 & 1*10 GROUND
2	3, 5	20A	1	3P-30	(SEE NOTE 2)	¾"C., 3*10 & 1*10 GROUND
3	7 - 1/2, 10	30A	1	3P-30	20A	¾"C., 3*10 & 1*10 GROUND
4	15	50A	2	3P-30	30A	1", C., 3*10 & 1*10 GROUND
5	20	50A	2	3P-60	40A	1", C., 3*8 & 1*10 GROUND
6	25	70A	2	3P-60	50A	1", C., 3*6 & 1*8 GROUND
7	30	90A	3	3P-60	60A	1"C. 3 *6 &1 *8 GROUND
8	40	100A	3	3P-100	80A	1½" C., 3*4 & 1*8 GROUND
9	50	100A	3	3P-200	100A	1½"C., 3*3 & 1*8 GROUND
10	60	125A	4	3P-200	125A	1½"C., 3*1 & 1*6 GROUND
11	75	150A	4	3P-200	150A	1½", C., 3*1/0 & 1*6 GROUND
12	100	200A	4	3P-200	200A	2"C., 3*2/0 & 1*6 GROUND

NOTES:
1. FOR SPECIAL EQUIPMENT OR OPERATING CONDITIONS, REFER TO MANUFACTURER'S RECOMMENDATIONS FOR OVERCURRENT PROTECTIVE DEVICES AND CONDUCTOR SIZING.
2. TIME DELAY FUSES FOR : ½ HP, THRU 1-1/2 HP, SHALL BE 4 AMPERE; 2 HP, SHALL BE 5 AMPERES; 3 HP, SHALL BE 8 AMPERE; AND 5 HP, SHALL BE 15 AMPERE.
3. NEMA MOTORS STARTERS AND DISCONNECT SWITCHES BASED ON FULL-VOLTAGE NON- REVERSING MOTORS; SPECIAL EQUIPMENT REQUIRING TWO-SPEED PART-WINDING/TWO-WINDING MOTORS AND/ORREVERSING TYPE MOTORS SHALL BE PROVIDED WITH MATCHING MOTOR STARTERS/DISCONNECT SWITCHES BY THE EQUIPMENT MANFACTURER AND SHALL BE INSTALLED IN ACCORDANCE WITH THE MANUFACTURERS RECOMMENDATIONS.

STATE OF TEXAS
LEOPOLDO F. RIOS
58272
REGISTERED PROFESSIONAL ENGINEER
9-10-97

THE SEAL APPEARING ON THIS DOCUMENT WAS AUTHORIZED BY LEOPOLDO F. RIOS, P.E., 58272 ON SEPTEMBER 9, 1996

FINAL RECORD DRAWING
Date: 12/25/99

No.	REVISION	BY	DATE
1	GEN. SETS	LR	2/7/97

TEXAS TURNPIKE AUTHORITY

ADDISON AIRPORT TUNNEL

ONE-LINE DIAGRAM & SCHEDULES

HDR Engineering, Inc.

SECTION XIII

DRAWN: WTD DATE: 12/05/96 DESIGNED: LR DATE: 08/28/96
CHECKED: BL DATE: 08/28/96 SCALE: NONE

CONTRACT No. DNT-260 , SHEET E161 OF 166

FILE: p:\addtun\dgn\adtuel09.dgn
DATE: 23-Apr-96 20:01