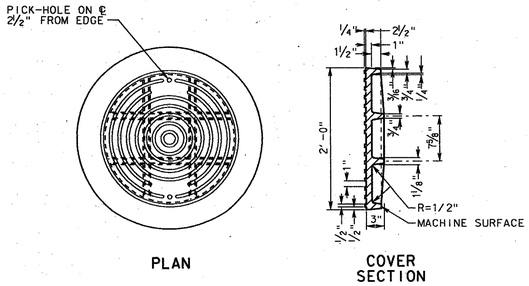

NOTE:
DALLAS FOUNDRY 700-8, OR EQUAL, 400 FRAME AND COVER. FOR OTHER THAN STREET LOCATIONS, 300 FRAME AND COVER (DALLAS FOUNDRY 700-12, OR EQUAL) MAY BE SUBSTITUTED.

MANHOLE COVER AND FRAME
STANDARD

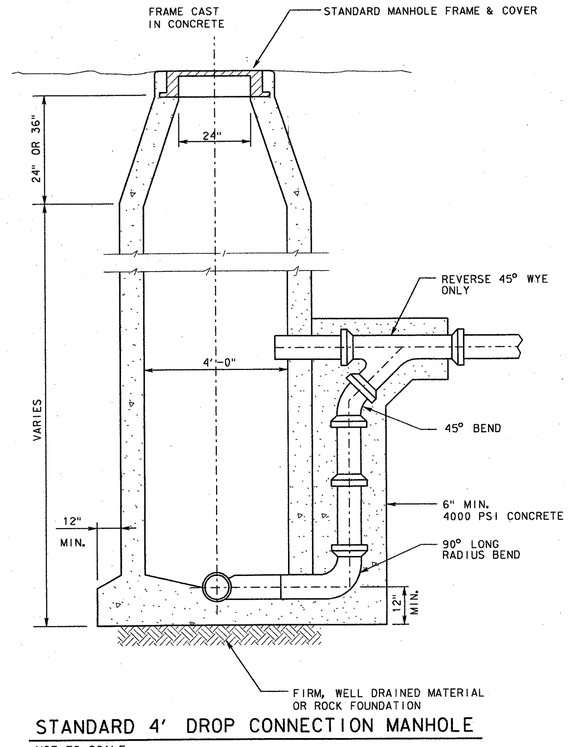

STANDARD 4' DROP CONNECTION MANHOLE
NOT TO SCALE

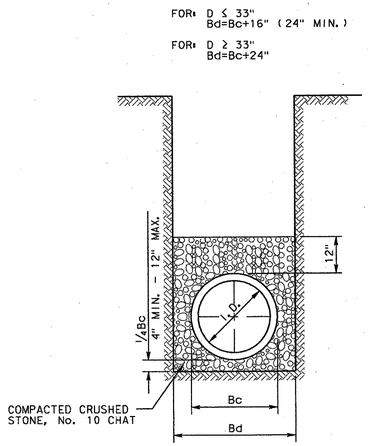

BEDDING DETAIL
CLASS "B"

* ALL SANITARY SEWER EMBEDMENT SHALL BE CLASS "B" UNLESS OTHERWISE SHOWN ON PLANS.

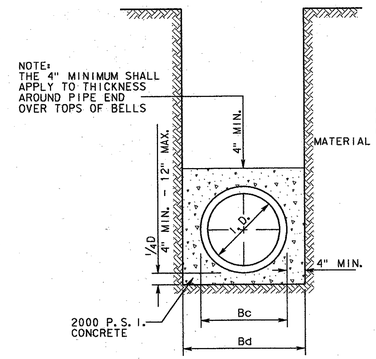

BEDDING DETAIL
CLASS "G"

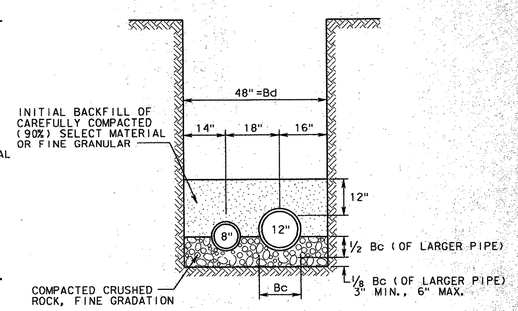

PVC FORCEMAIN
EMBEDMENT DETAIL

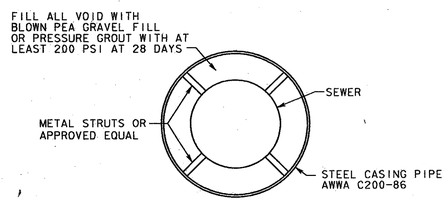

CARRIER PIPE (DIA.)	CASING PIPE (DIA.)	MIN. STEEL PIPE WALL THICKNESS
8"	16"	¼"
12"	18"	¼"
15"	24"	5/16"
18"	28"	5/16"
21"	30"	5/16"
24"	34"	⅜"
21"*	36"	5/16"

* UNDER RAILROAD

CASING DETAIL
FOR BORING

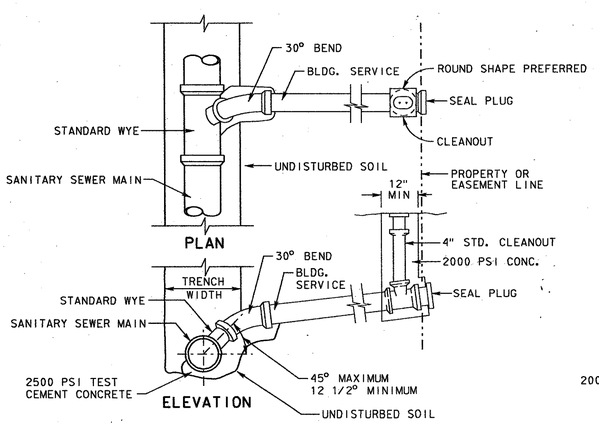

SERVICE CONNECTION
STANDARD

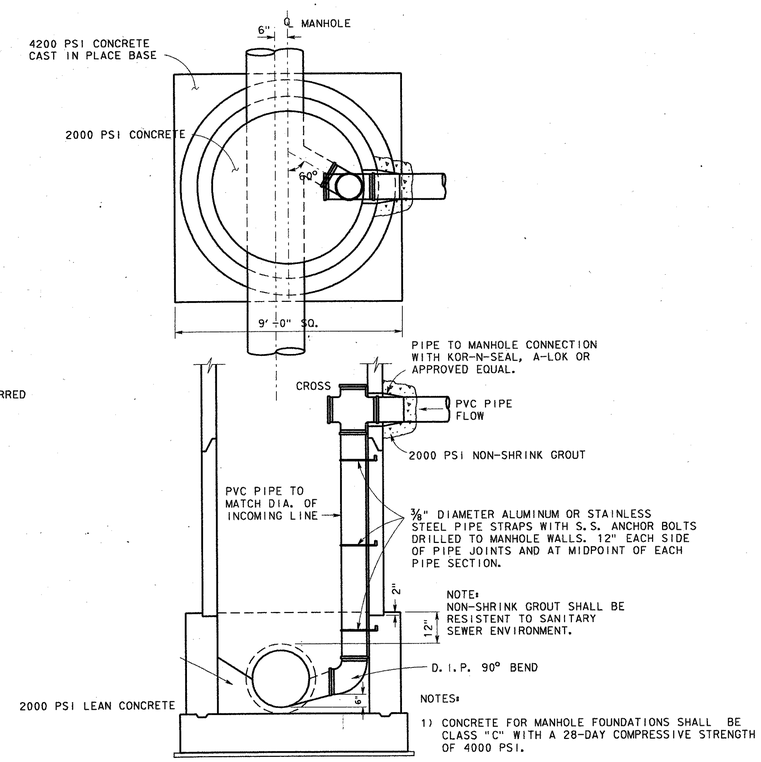

NOTE:
NON-SHRINK GROUT SHALL BE RESISTENT TO SANITARY SEWER ENVIRONMENT.

NOTES:
1) CONCRETE FOR MANHOLE FOUNDATIONS SHALL BE CLASS "C" WITH A 28-DAY COMPRESSIVE STRENGTH OF 4000 PSI.

6' DIA. DROP MANHOLE CONNECTION

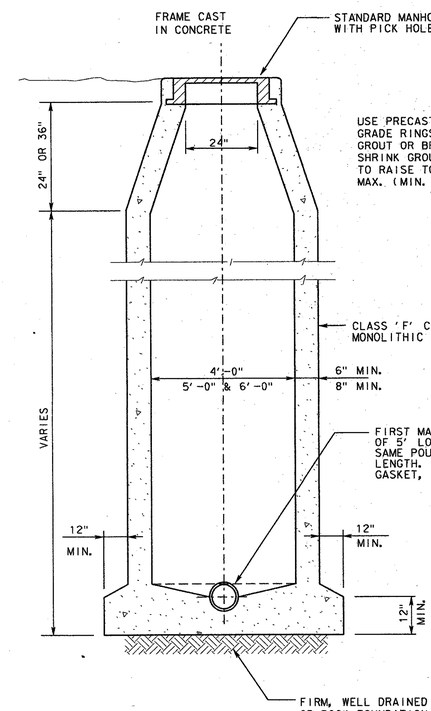

STANDARD CAST-IN-PLACE
CONCRETE MANHOLE
NOT TO SCALE

1 THE BOTTOMS OF ALL MANHOLES ARE TO BE CAST-IN-PLACE.

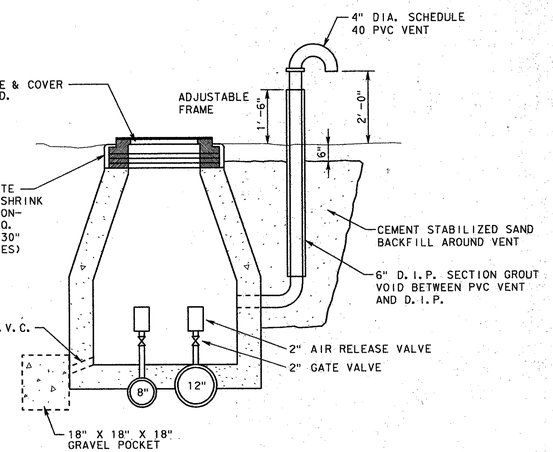

AIR RELEASE VALVES

STATE OF TEXAS
JOHN H. LINDNER
64694
REGISTERED PROFESSIONAL ENGINEER
4/23/96

NO.	DATE	REVISION	APPROV.
4			
3			
2			
1	4-23-96	ADDENDUM NO. 1	J.H.L.

TOWN OF ADDISON, TEXAS

MIDWAY/BELTLINE SANITARY SEWER
PHASE II

SANITARY SEWER DETAILS
SHEET 1

Carter :: Burgess
Consultants in Engineering, Architecture, Planning and the Environment
CARTER & BURGESS, INC.
7950 ELMBROOK DRIVE, SUITE 250
DALLAS, TX 75247-4961

Unit		Scale:		Date	04-05-96
Designed	J. Lindner	Checked	J. Lindner	Job No.	93327601D
Drawn	R. Howman	Approved	J. Lindner	Sheet	36 of 63

3276cd01.dgn