GENERAL CONCRETE PAVEMENT NOTES

1. REVIEW AND VERIFY ALL AS-BUILT CONDITIONS WHICH AFFECT NEW CONSTRUCTION PRIOR TO SUBMISSION OF SHOP DRAWINGS AND ANY FABRICATION.
2. INDUSTRY STANDARDS GOVERNING THIS WORK ARE OF THE LATEST ISSUE AT THE DATE OF THIS DRAWING RELEASE.
3. ENSURE STORAGE, HANDLING, PREPARATION, INSTALLATION, ETC. OF ALL MATERIALS ARE IN ACCORDANCE WITH MANUFACTURER'S / VENDOR'S PRINTED RECOMMENDATIONS AND INSTRUCTIONS.

PAVEMENT SUBGRADE AND BASE NOTES

1. ENSURE TESTING AGENCY VERIFIES THE SUBGRADE IS COMPACTED TO THE SPECIFIED MAXIMUM DRY DENSITY AS DETERMINED BY THE GEOTECHNICAL ENGINEER. RECOMPACT SOFT AREAS AS DIRECTED BY THE GEOTECHNICAL ENGINEER. TESTING AGENCY TO PROVIDE A LETTER REPORT TO THE OWNER'S REPRESENTATIVE STATING THAT THE SUBGRADE HAS BEEN PROPERLY COMPACTED.
2. ENSURE TESTING AGENCY EVALUATES THE SUBGRADE BY PROOF-ROLLING. PROOF ROLLING TO BE DONE BY A FULLY LOADED TANDEM-AXLE DUMP TRUCK OR OTHER EQUIVALENTLY WHEELED VEHICLE ACCEPTABLE TO THE TESTING AGENCY. REPAIR SOFT AREAS THAT DEPRESS DEEPER THAN 1/2 INCH AS DIRECTED BY THE TESTING AGENCY. TESTING AGENCY TO PROVIDE A LETTER REPORT TO THE OWNER'S REPRESENTATIVE STATING THE SUBGRADE HAS BEEN PROOF-ROLLED AND IS ACCEPTABLE. **** DO NOT** PROOF-ROLL ON TOP OF OR WITHIN 5 FEET OF THE EDGE OF THE UNDERGROUND STORAGE TANK LOCATIONS.
3. AGGREGATE BASE MATERIAL:
   - A. COARSE AGGREGATE BASE: CRUSHER RUN WITH ROCK FINES. USE ASTM D448, NO. 467, 57 OR 67 BLEND ONLY IF NOTED OR ALLOWED.
   - B. FINE AGGREGATE BASE: CLEAN SCREENINGS ASTM D 448, NO. 10 WITH 6% TO 12% PASSING NO. 200 SIEVE.
5. AGGREGATE BASE MATERIAL INSTALLATION:
   - A. COMPACT COARSE AGGREGATE BASE TO FINAL THICKNESS SHOWN IN LAYERS NOT EXCEEDING 6 INCHES, WITH MINIMUM OF 2 PASSES PER LAYER WITH A VIBRATORY COMPACTOR.
   - B. COMPACT BASE TO THE SPECIFIED MAXIMUM DRY DENSITY AS DETERMINED BY THE GEOTECHNICAL ENGINEER.
   - C. CHOKE-OFF TOP SURFACE OF COARSE AGGREGATE BASE WITH FINE AGGREGATE BASE MATERIAL DUE TO THE FOLLOWING:
     - C.1. AS REQUIRED TO MEET FINE GRADE ELEVATION TOLERANCES SPECIFIED.
     - C.2. WHERE COARSE AGGREGATE BASE MATERIAL DOES NOT HAVE SUFFICIENT FINE PARTICLES TO PRODUCE A SURFACE THAT IS FREE OF EXPOSED AGGREGATE OR SURFACE VOIDS IMMEDIATELY PRIOR TO PAVEMENT INSTALLATIONS.
   - D. COMPACT FINE AGGREGATE BASE CHOKE-OFF LAYER WITH A MINIMUM OF 2 PASSES WITH A VIBRATORY COMPACTOR.
   - E. TOP SURFACE OF BASE MATERIAL TO BE DRY, SMOOTH, FLAT, DENSE SURFACE IMMEDIATELY BEFORE PLACING CONCRETE.
6. ENSURE TESTING AGENCY VERIFIES AGGREGATE BASE IS COMPACTED TO THE SPECIFIED MAXIMUM DRY DENSITY AS DETERMINED BY THE GEOTECHNICAL ENGINEER IMMEDIATELY PRIOR TO PLACING PAVEMENT. TESTING AGENCY TO PROVIDE LETTER REPORT TO OWNER'S REPRESENTATIVE STATING THE BASE IS ACCEPTABLE.
7. NOTIFY THE OWNER'S REPRESENTATIVE IMMEDIATELY IF UNUSUAL SOIL CONDITIONS ARE FOUND.
8. PROTECT EXISTING STRUCTURES, UTILITIES, PROPERTY CORNERS, ETC. RESTORE ALL ITEMS DAMAGED, AS REQUIRED BY OWNER, AT NO COST TO OWNER OR WITHOUT EXTENSION OF CONTRACT TIME. **** DO NOT** ALLOW STORED EXCAVATION MATERIAL TO DISRUPT PROPER DRAINAGE OF AREA, DAMAGE TO SURROUNDING AREAS, OR STAIN ADJACENT CONCRETE.
9. DISPOSE OF EXCAVATED MATERIAL AS REQUIRED BY OWNER'S REPRESENTATIVE.

CONCRETE PAVEMENT NOTES:

1. CONFORM TO ACI 318 AND 117 FOR THE DESIGN AND PLACEMENT OF CONCRETE, REINFORCING, AND RELATED ITEMS.
2. CONFORM TO ACI 306.1 FOR COLD WEATHER CONCRETING AND ACI 305R WHEN ANY COMBINATION OF HIGH TEMPERATURE, LOW RELATIVE HUMIDITY, AND WIND VELOCITY TEND TO IMPAIR THE QUALITY OF THE CONCRETE. REJECT CONCRETE IF ITS TEMPERATURE AT TIME OF PLACEMENT IS 90 DEGREES FAHRENHEIT (°F) OR ABOVE. PROTECT SURFACES OF EXPOSED CONCRETE FROM PRECIPITATION DAMAGE UNTIL ADEQUATE STRENGTH IS GAINED TO PREVENT DAMAGE.
3. CONFORM TO ACI 302.1R, 304R, 308, 309R AND 347R FOR CONCRETE, FORM WORK, CURING, AND RELATED ITEMS. CONFORM TO CRSI MANUAL OF STANDARD PRACTICE AND CRSI PLACING REINFORCING BARS FOR PLACING REINFORCING.
4. THE GEOTECHNICAL ENGINEERING REPORT INDICATES THAT THE SOILS ON-SITE HAVE A XXXXXXXX SULFATE EXPOSURE. WHERE IMPORTED FILL OR BASE MATERIALS ARE IN CONTACT WITH CONCRETE, THE SULFATE CONTENT AND EXPOSURE OF THESE MATERIALS SHALL BE ACQUIRED BY TEST. SUBMIT ALL TEST RESULTS WITH CONCRETE MIX DESIGNS. FAILURE TO PROVIDE SUPPORTING TEST RESULTS FROM AN ACCREDITED TESTING LABORATORY WILL REQUIRE THE CONCRETE MIX TO BE PROPORTIONED FOR VERY SEVERE SULFATE EXPOSURE AT NO ADDITIONAL COST OR DELAY IN THE PROJECT SCHEDULE.
5. CONCRETE SHALL BE PROPORTIONED TO MEET THE PROJECT SPECIFICATIONS AND THE MINIMUM CRITERIA ESTABLISHED IN "TABLE A" (THIS SHEET) BASED ON THE SULFATE EXPOSURE FROM ANY ADJACENT SOILS OR FILL MATERIALS.
6. ADDITIONALLY, EXTERIOR CONCRETE EXPOSED TO FREEZING TEMPERATURES AND/OR SALT OR DEICING CHEMICALS SHALL HAVE AIR ENTRAINMENT AND THE CEMENT CONTENT APPROPRIATE FOR THE EXPECTED EXPOSURE. SEE SPECIFICATIONS FOR MORE INFORMATION.
7. CONCRETE TO MEET DURABILITY REQUIREMENTS OF ACI 301. FREEZING AND THAWING EXPOSURE CATEGORY TO BE [F0] [F1] [F2] [F3], SULFATE EXPOSURE CATEGORY TO BE [S0] [S1] [S2] [S3], AND CORROSION PROTECTION EXPOSURE CATEGORY TO BE [C0] [C1] [C2]. PROVIDE A MINIMUM CONCRETE COMPRESSIVE STRENGTH AT 28 DAYS OF [3500 PSI] [4000 PSI] [4500 PSI] [5000 PSI] WITH MAXIMUM WATER/CEMENTITIOUS RATIO OF [0.55] [0.50] [0.45] [0.40].
8. ENSURE REINFORCING BARS CONFORM TO ASTM A615 GRADE 60, DEFORMED.
9. PROVIDE CLASS B TENSION LAP SPLICES PER ACI 318, FOR CONCRETE STRENGTH AND BAR LOCATIONS NOTED.
10. MAINTAIN FULL THICKNESS FOR DEPRESSED OR SLOPED PAVEMENTS.
11. **** DO NOT** ADD WATER OR PLAIN CEMENT TO ANY PAVEMENT SURFACE DURING FINISHING OPERATIONS.
12. PERFORM NO FINISHING OPERATION WHILE WATER IS PRESENT ON PAVEMENT SURFACE.
13. STRIKE OFF CONCRETE TO REQUIRED ELEVATIONS AND IMMEDIATELY START FINISHING/FLATTENING OPERATIONS. ENSURE FINISHING OPERATIONS ARE NO MORE THAN NECESSARY TO REMOVE IRREGULARITIES AND MEET SPECIFIED TOLERANCES. USE A HIGHWAY STRAIGHTEDGE 10 FOOT WIDE MAXIMUM, UNLESS OTHERWISED ALLOWED BY OWNER'S REPRESENTATIVE. IN ORDER TO CUT OFF HIGH SPOTS AND FILL IN LOW SPOTS. PERFORM FINISHING OPERATIONS AS NECESSARY TO ENSURE PAVEMENT WILL DRAIN WELL. UNIFORMLY FINISH SURFACE TO TEXTURE PREVIOUSLY APPROVED BY OWNER'S REPRESENTATIVE. **** DO NOT** ALLOW SURFACE TO DRY DURING FINISHING OPERATIONS AND BEFORE CURING COMPOUND IS APPLIED; USE EVAPORATION RETARDANT AS NECESSARY TO PREVENT SURFACE DRYING AND PLASTIC SHRINKAGE CRACKS.
14. FOR TOLERANCES CONFORM TO ACI 117 AND ACI 347R, EXCEPT AS NOTED BELOW:
    - A. PAVEMENT AGGREGATE BASE FINE GRADE +0, -3/4 INCH.
    - B. MINIMUM PAVEMENT TOLERANCE: -3/4 INCH.
    - C. WHEN COMPUTING THE AVERAGE OF ALL SAMPLES, SAMPLES WITH A THICKNESS MORE THAN 3/4 INCH ABOVE THE SPECIFIED THICKNESS SHALL BE ASSUMED TO HAVE A THICKNESS OF 3/4 INCH MORE THAN THE SPECIFIED THICKNESS.
    - D. AVERAGE PAVEMENT THICKNESS TOLERANCE: -0.
    - E. THICKNESS SAMPLES ARE TO BE RANDOMLY LOCATED FROM EACH PAVEMENT PLACEMENT AND NOT EXCEED 1000 SQUARE FEET OF PAVEMENT SURFACE AREA.
16. START SAWING PAVEMENT CONTRACTION JOINTS USING A "SOFF-CUT" SAW, BLADES AND SKID PLATES AS SOON AS CONCRETE HAS HARDENED SUFFICIENTLY TO PREVENT RAVELING OR DISLODGING OF AGGREGATES. UNLESS RAVELING OR DISLODGING OCCURS, COMPLETE SAWING OF JOINTS WITHIN THE MAXIMUM ELAPSED TIME LIMIT NOTED BELOW, BUT PREFERABLY LESS. THE SPECIFIED TIME FOR ANY ONE LOCATION STARTS WHEN FINISHING OPERATIONS ARE COMPLETE FOR THAT LOCATION. THE SPECIFIED TEMPERATURE IS THE MAXIMUM AIR TEMPERATURE IN DEGREES FAHRENHEIT (°F) THAT OCCURS WITHIN THE SPECIFIED TIME LIMIT. THE ELAPSED TIME MAY NEED TO BE SHORTENED EVEN MORE IF DRY AND OR WINDY CONDITIONS ARE PRESENT. ENSURE JOINTS ARE CLEANED AFTER SAWING AND REMAIN CLEAN UNTIL SEALED.

MAX DEGREES FAHRENHEIT (°F)	MAX ELAPSED HOURS
85 AND ABOVE	1
60 - 84	2
50 - 59	3
40 - 49	4

17. START CURING AS SOON AS CONCRETE SURFACE WILL NOT BE DAMAGED BY CURING OPERATIONS. CURE CONCRETE CONTINUOUSLY FOR A MINIMUM OF SEVEN CONSECUTIVE DAYS.
18. ENSURE PAVEMENT SURFACE IS PROTECTED FROM EQUIPMENT SCRAPES, IMPACT ABRASIONS, STAINS, ETC. REPAIR PAVEMENT SURFACE AS DIRECTED BY OWNER'S REPRESENTATIVE. VEHICLE AND EQUIPMENT TRAFFIC IS PROHIBITED UNTIL THE COMPLETION OF PAVEMENT CURING PERIOD. ENSURE VEHICLES AND EQUIPMENT ARE DIAPERED TO PREVENT OIL OR OTHER FLUID LEAKS FROM STAINING THE PAVEMENT.
19. REFER TO ARCHITECTURAL, MECHANICAL, ELECTRICAL, PROCESS, CIVIL AND VENDOR'S DRAWINGS FOR EMBEDDED ITEMS NOT SHOWN. COORDINATE AND PLACE ALL EMBEDDED ITEMS SHOWN ON THE DRAWINGS OR REQUIRED BY ALL TRADES.
20. PRE-CONSTRUCTION MEETINGS:
    - A. ATTEND PRE-CONSTRUCTION MEETING TO BE SCHEDULED AT LEAST 7 DAYS BEFORE STARTING MAIN CONCRETE PAVEMENT.
    - B. ATTENDANCE DESIGNATED BY THE OWNER'S REPRESENTATIVE AND THE FOLLOWING: STRUCTURAL SERVICES INC. REPRESENTATIVE, TESTING AGENCY, CONTRACTOR, CONCRETE SUPPLIER (INCLUDING QUALITY CONTROL PERSONNEL), AND SUBCONTRACTORS FOR SUBGRADE AND BASE PREPARATION, REINFORCEMENT, PUMPING OR OTHER MEANS OF CONVEYING, PLACEMENT, FINISHING, SAWING, FORMWORK, AND OTHER PERTINENT PORTIONS OF WORK.
    - C. REPRESENTATIVES ARE TO BE PERSONNEL WHO ARE DIRECTLY INVOLVED IN PROJECT AND WHO HAVE AUTHORITY TO CONTROL WORK.

TABLE A (SEE CONCRETE PAVEMENT NOTE #5)

SULFATE EXPOSURE	WATER SOLUBLE SULFATE (SO4) IN WATER PPM	SULFATE (SO4) IN WATER PPM	PORTLAND CEMENT TYPE	MAXIMUM W/C RATIO	CONCRETE PAVEMENTS
NEGLIGIBLE	0.00 < SO4 < 0.10	0 < SO4 < 150	I	0.55	3500
MODERATE	0.10 < SO4 < 0.20	150 < SO4 < 1500	II	0.50	4000
SEVERE	0.20 < SO4 < 2.00	1500 < SO4 < 10,000	V	0.45	4500
VERY SEVERE	SO4 > 2.00	SO4 > 10,000	V PLUS POZZOLAN	0.40	5000

NOTE TO CIVIL ENGINEERING COMPANY

TYPICALLY USE "MODERATE" EXPOSURE FROM TABLE. CONTACT EPM IF EXPOSURE CLASS SHOULD BE CHANGED.

NOTES:

1. SLAB PENETRATIONS INCLUDE, BUT ARE NOT LIMITED TO, BOLLARDS, MANHOLES, INLETS, CLEANOUTS, WATER VALVES, ETC.

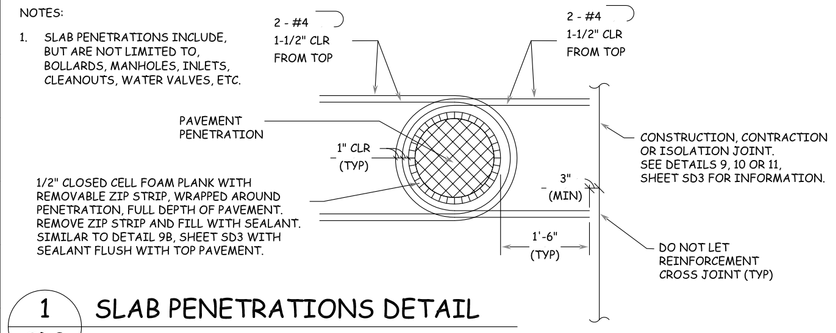

1 / SD3 SLAB PENETRATIONS DETAIL

NTS

NOTES:

1. PNA CONTACT INFORMATION IS: 1-800-542-0214, PNA-INC.COM.

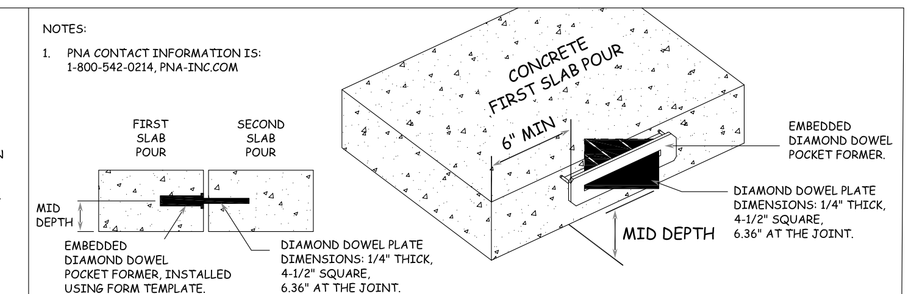

8 / SD3 PNA DIAMOND DOWEL PLATE DETAIL (TYP)

NTS

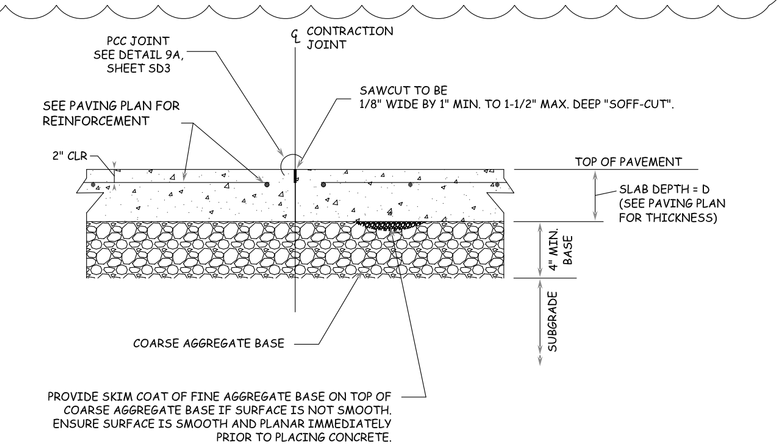

9 / SD3 SLAB CONTRACTION JOINT SECTION

NTS

NOTES:

1. SAWCUT JOINTS IN ACCORDANCE WITH CONCRETE PAVEMENT NOTE 16, SHEET SD3.
2. WAIT AS LONG AS FEASIBLE TO SEAL JOINTS TO ALLOW CONCRETE SHRINKAGE TO OCCUR.

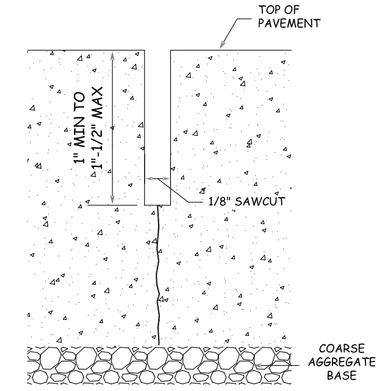

9A / SD3 PCC JOINT DETAIL

NTS

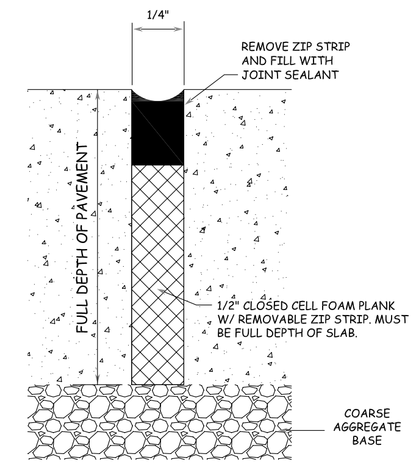

9B / SD3 COMPRESSIBLE CLOSED FOAM PLANK ISOLATION JOINT DETAIL

NTS

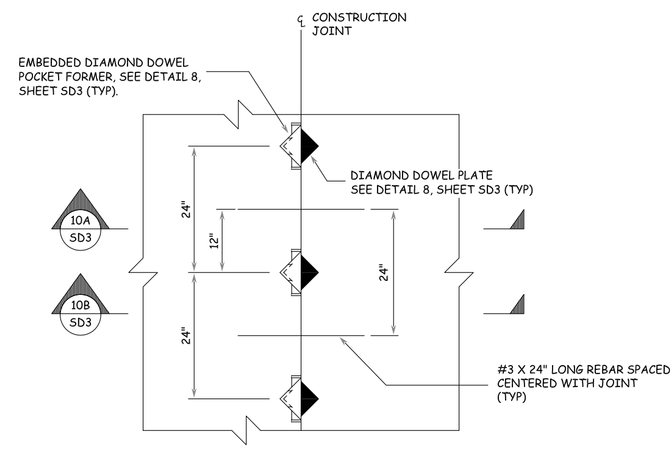

10 / SD3 CONSTRUCTION JOINT PARTIAL PLAN DETAIL

NTS

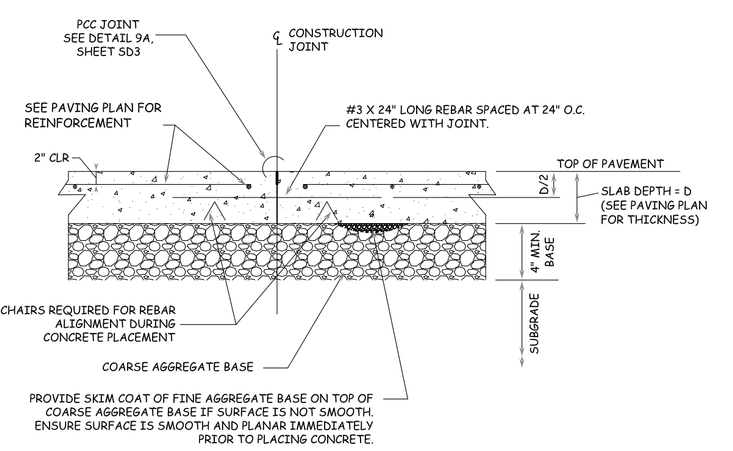

10A / SD3 SLAB CONSTRUCTION JOINT SECTION

NTS

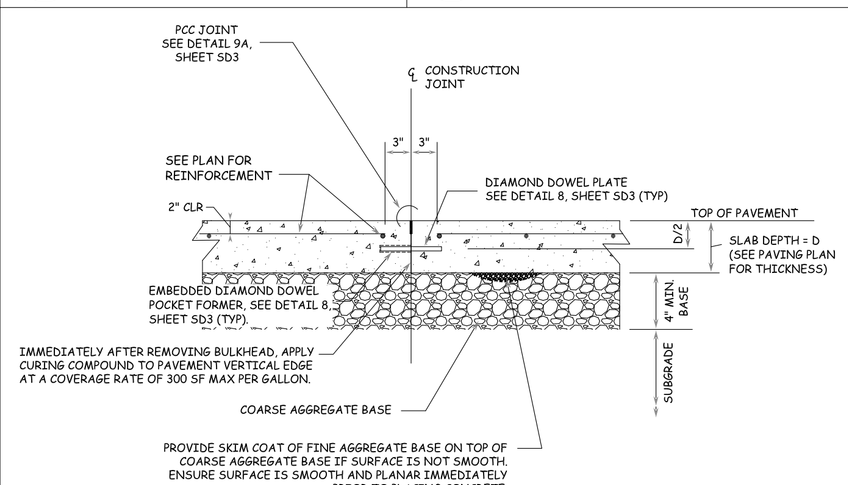

10B / SD3 SLAB CONSTRUCTION JOINT SECTION

NTS

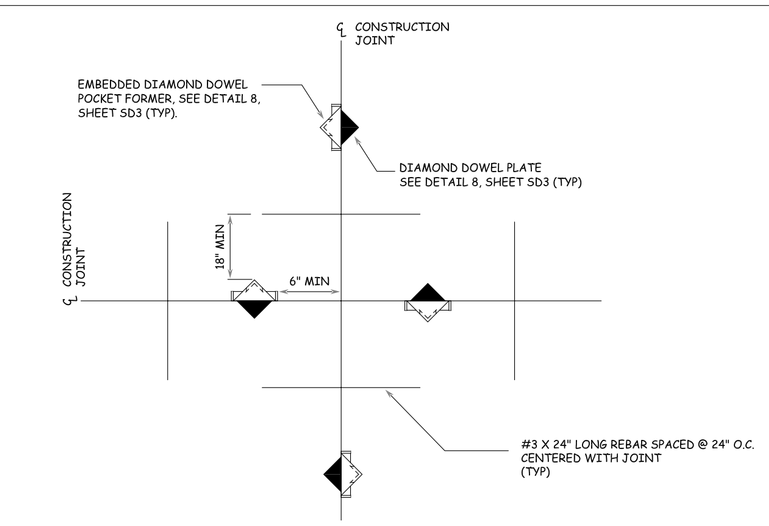

10C / SD3 CONSTRUCTION JOINT INTERSECTION PARTIAL PLAN DETAIL

NTS

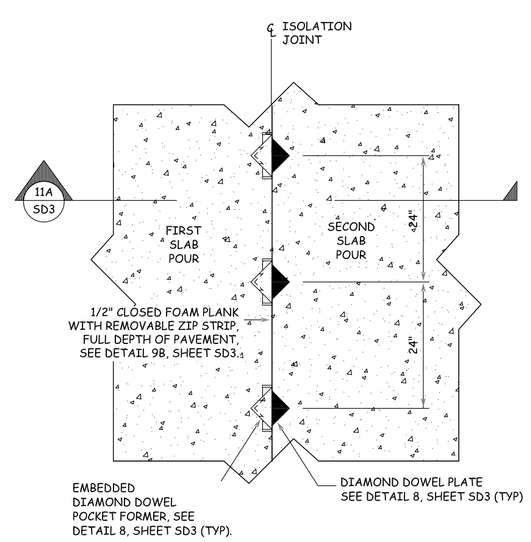

11 / SD3 ISOLATION JOINT PARTIAL PLAN DETAIL

NTS

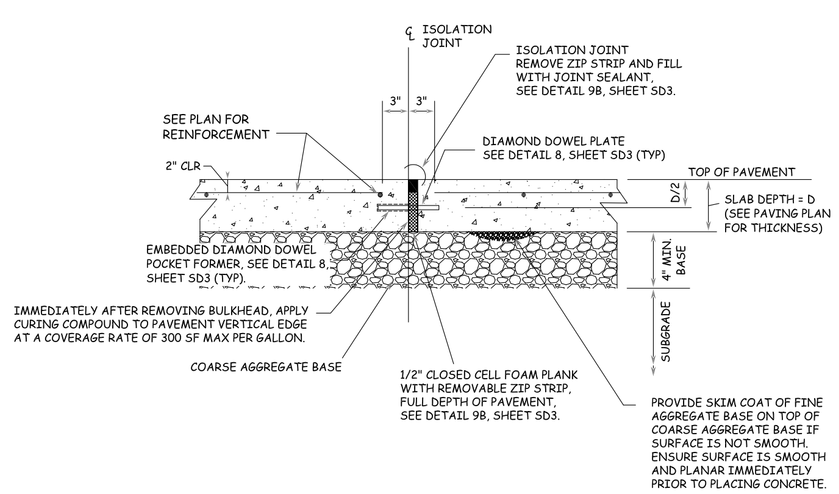

11A / SD3 ISOLATION JOINT SECTION

NTS

NOTE:

1. THIS SECTION ASSUMES THE TANK OR DUMPSTER PAD PAVEMENT WILL BE PLACED PRIOR TO THE THINNER MAIN PAVEMENT.

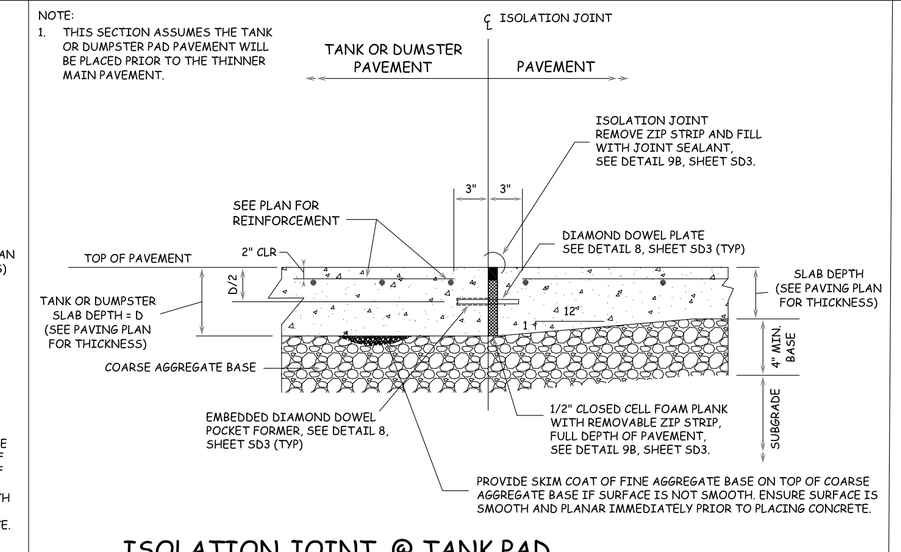

11B / SD3 ISOLATION JOINT @ TANK PAD AND DUMPSTER PAD PAVEMENT SECTION

NTS

AS-BUILTS

Travis J. Bousquet, PE — May 22, '20 — Date

NO.		DATE
8	As-Builts to City	05/22/20
7	Modification to sidewalk along Arapaho	04/16/20
6	Additional Spot elevations to GC	11/07/19
5	REVISED PLANS TO TOWN	08/23/2019
4	TOWN SUBMITTAL	04/05/2019
3	TOWN SUBMITTAL	08/30/2018
2	TOWN SUBMITTAL	08/28/2018
1	TOWN SUBMITTAL	02/12/2018

JONES|CARTER
Texas Board of Professional Engineers Registration No. F-439
4030 Westchester Plaza Drive, Suite 220 • Fort Worth, TX 76107 • 682.268.2200

TRAVIS J. BOUSQUET — 86063 — LICENSED — PROFESSIONAL ENGINEER — STATE OF TEXAS — 05/22/20

THESE PLANS ARE SUBJECT TO FEDERAL COPYRIGHT LAWS: ANY USE OF SAME WITHOUT THE EXPRESSED WRITTEN PERMISSION OF RACETRAC PETROLEUM, INC. IS PROHIBITED.

RACETRAC PETROLEUM, INC.
3225 CUMBERLAND BOULEVARD
SUITE 100 ATLANTA, GA 30339
(770) 431-7600

DETAIL SHEET 3 (PRIVATE)

RACETRAC

Beltline/Marsh Business Park
Lot 2, Block 1
3.133 Ac. - Zoned: Light Retail
Addison, Texas

DATE	May 22, '20
SCALE	1"=30'
DRAWN-BY	TJB
DRAWING NAME:	
SD3 (SHEET NO.)	- (VERSION)