NOTES:

1. TRASH CAN MOUNT PROVIDED BY OWNER, INSTALLED BY G.C..
2. SEE SITE PLAN FOR TRASH CAN MOUNT LOCATIONS AT ISLANDS.
3. SEE DETAILS THIS SITE FOR OTHER TRASH CAN LOCATIONS.

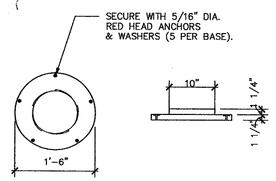

1 SD1 TYP. TRASH CAN MOUNT DETAIL N.T.S.

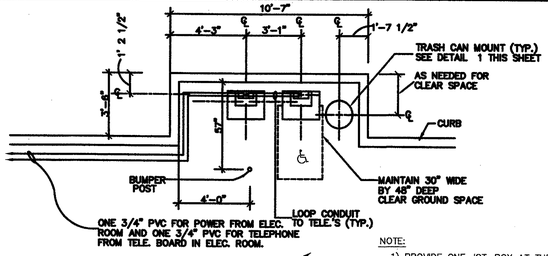

PLAN VIEW

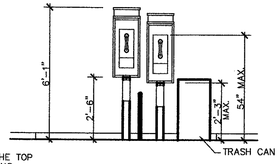

NOTE:
1) PROVIDE ONE JCT. BOX AT THE TOP OF EACH CONDUIT FOR LOOPING
2) USE 3/4" DIA. PVC FOR HORIZONTAL CONDUIT AND USE 3/4" DIA. GALV. FOR ELBOWS AND VERTICAL CONDUIT

ELEVATION

2 SD1 PUBLIC TELEPHONE DETAIL N.T.S.

NOTE: TELEPHONE INSTALLATION MUST COMPLY WITH F.A.D.A. 4-31

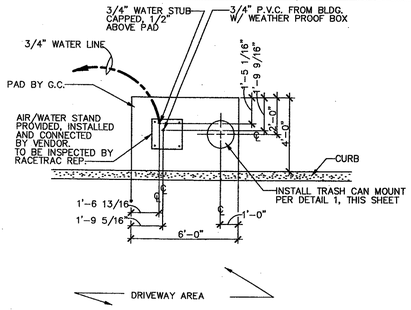

PLAN
FOR USE AT ALL OTHER LOCATIONS

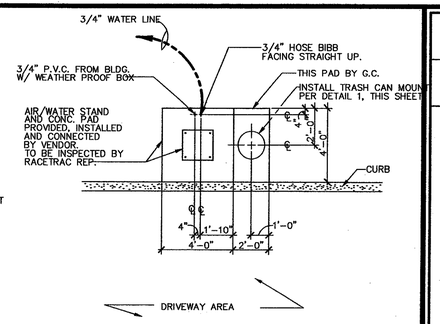

PLAN
FOR USE AT FLORIDA LOCATIONS

4 SD1 AIR / WATER STAND DETAILS N.T.S

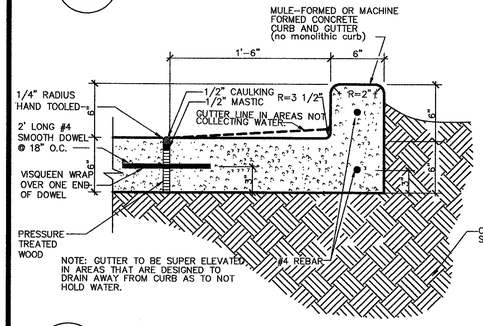

5 SD1 TYP. CURB DETAIL AT CONCRETE SLAB N.T.S.

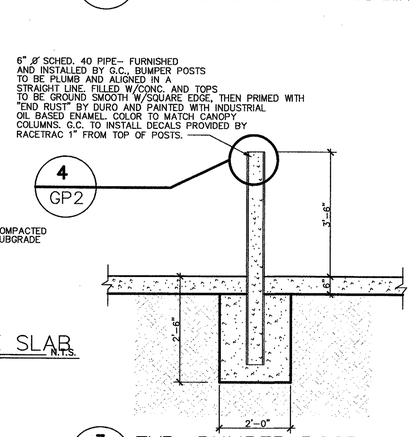

3 SD1 TYP. BUMPER POST DETAIL N.T.S.

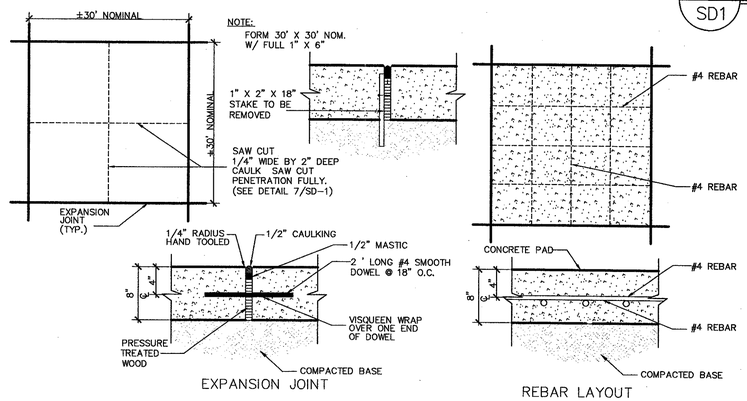

6 SD1 TYP. EXPANSION JOINT & REBAR LAYOUT DETAIL N.T.S.

NOTE: REFER TO P2 "GRADE PLAN" FOR LOCATION
NOTE: CONCRETE TO BE 6" THICK IN ALL AREAS EXCEPT OVER TANKS AND IN FRONT OF DUMPSTER ENCLOSURE WHERE IT IS TO BE 8" THICK. SEE GRADING PLAN FOR LOCATIONS.

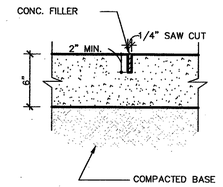

CONC. FILLER

VULKEM 116 OR 245 (NON SAG) JOINT MATERIAL TO BE INSTALLED PER MANUFACTURERS SPECIFICATIONS. PROVIDE LIGHT GREY COLOR TO MATCH CONC.

SAW CUT MUST BE COMPLETED WITHIN 24 HOURS OF POUR.

NOTE: THOROUGHLY CLEAN JOINT OF ALL SAND, SOIL AND MISCELLANEOUS DEBRIS. APPLY MASKING TAPE ALONG SIDES OF JOINT FOR TEMPORARY PROTECTION DURING SEALANT APPLICATIONS. APPLY FULL BEAD OF VULKEM 116 OR 245 (NON SAG) POURABLE SEALANT AND TOOL LIGHTLY. REMOVE TAPE IMMEDIATELY.

7 SD1 TYPICAL SAW CUT DETAIL N.T.S.

NOTE: REFER TO P2 "GRADE PLAN" FOR LOCATION

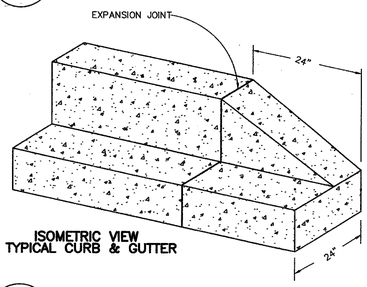

ISOMETRIC VIEW
TYPICAL CURB & GUTTER

9 SD1 2' CURB TRANSITION N.T.S.

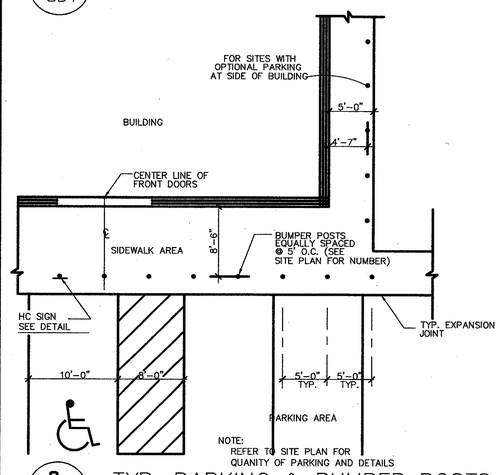

NOTE:
REFER TO SITE PLAN FOR QUANITY OF PARKING AND DETAILS

8 SD1 TYP. PARKING & BUMPER POSTS DETAIL

TRAFFIC MARKINGS TO COMPLY WITH F.A.D.A.

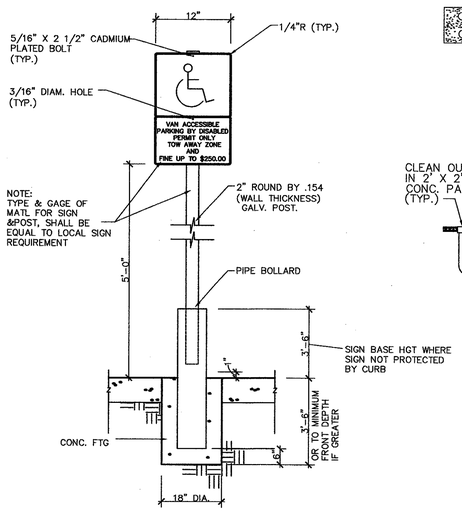

NOTE:
CONTRACTOR SHALL VERIFY ALL THE REQUIRED INFORMATION NECESSARY AT EACH SIGN WITH LOCAL AUTHORITIES PRIOR TO PURCHASING.

TYP. HANDICAP SIGNAGE DETAIL N.T.S.

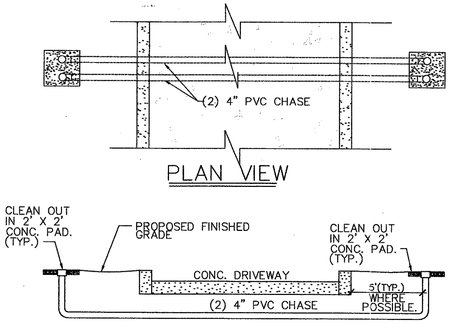

PLAN VIEW

10 SD1 PVC CHASE N.T.S.

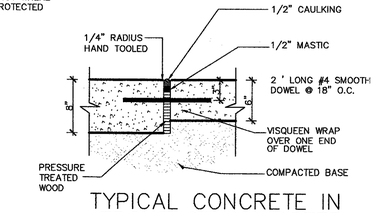

TYPICAL CONCRETE IN FRONT OF DUMPSTER & AROUND TANK PAD N.T.S.

11 SD1 NOTE: REFER TO "GRADE PLAN" FOR LOCATION

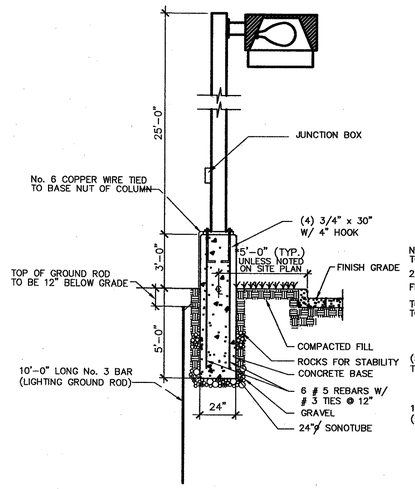

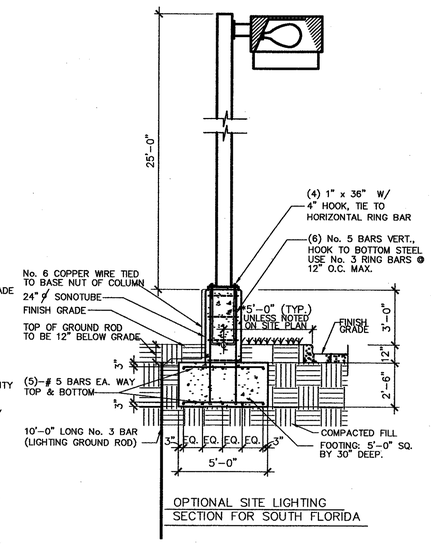

OPTIONAL SITE LIGHTING SECTION FOR SOUTH FLORIDA

NOTE:
1. LIGHT POLES SHALL MEET 100 MPH WIND (SBC 1997 EDITION 1606)
2. CONCRETE ABOVE FINISH GRADE TO BE SMOOTH WITH RUBBED FINISH.

12 SD1 TYPICAL SITE LIGHTING SECTIONS N.T.S.

NO.	REVISIONS	BY	DATE

RaceTrac
THESE PLANS ARE SUBJECT TO FEDERAL COPYRIGHT LAWS. ANY USE OF SAME WITHOUT THE EXPRESSED WRITTEN PERMISSION OF RACETRAC PETROLEUM, INC. IS PROHIBITED. ©2002 RACETRAC PETROLEUM, INC.

RaceTrac
RACETRAC PETROLEUM, INC.
300 TECHNOLOGY COURT
SMYRNA, GEORGIA 30082
(770) 431-7600

STANDARD DETAILS
RACETRAC SERVICE STATION
SITE: STANDARD
SCALE
DRAWN BY: N.L. SIMS
DATE: 8/9/02
DWG NO.: SD1RO

SD1 | 0
SHEET NO. | REV.