I. ELECTRICAL CONDUCTORS

A. MATERIALS

1. Insulated conductors shall be NEC Type XHHW. Conductors shall be color coded in accordance with the NEC, articles 200, 250, and 310: i.e. Grounded conductors (neutrals) shall be white, Grounding conductors (ground wires) shall be bare or green, Ungrounded conductors (hots) shall be any color except green, white, or gray. Identification of conductors #10 AWG and smaller shall be by continuous jacket color. Color coding of electrical conductors #8 AWG and larger shall be either by continuous color jacket or by colored tape. Colored tape marker shall consist of a half-lap of tape covering a 6-inch length of conductor.
2. Where two or more circuits are present in one conduit or enclosure, the conductors of each circuit shall be identified by a permanent non-metallic tag at each accessible location. The tag shall be fastened to the conductors by two plastic straps. Each tag shall indicate circuit number, letter, or other identification shown in the plans.
3. Grounding electrode conductor #6 AWG for bonding to ground rod at electrical service, shall be solid. Connection of conductor to ground rod shall be made using UL Listed connectors designed for such purposes.
4. Heat Shrink Tape filler shall be used to seal the ends of heat shrink tubing around two or more conductors that are insulated with heat shrink tubing. Tape material shall have a minimum dielectric strength of 225 volts per mil and may be either cross-linked butyl rubber. Tape shall be supplied in rolls and shall have a backing (release paper) to prevent the tape from sticking to itself.
5. Heat shrink tubing shall be heavy wall, UL listed for 600 volts or greater and shall have factory applied internal sealant.
6. Splicing materials, insulating materials, breakaway disconnects and fuse holders will not be paid for directly but shall be subsidiary to various bid items.

B. CONSTRUCTION METHODS

1. After conductors have been installed in conduit, a pull test will be made on conductors. When any length of conductor cannot be freely pulled, the Contractor shall make any needed alterations or repairs at no expense to the State.
2. The Contractor shall make insulation resistance tests in accordance with Item 620, Conductors. The contractor shall coordinate with the Engineer to witness the tests.
3. A sufficient length of conductor for making up connections shall be left in ground boxes (2 feet minimum, 3 feet maximum, to point of splice, 3 feet minimum, 4 feet maximum, when conductor is pulled through with no splice), enclosures, weatherheads and pole bases (1 foot minimum and typical, 1.5 feet maximum).
4. Splices shall be made only in junction boxes, ground boxes, pole bases, or electrical enclosures and shall be made with listed compression or screw type pressure connectors, terminal blocks, bolted lugs, or split bolt connectors. Splices shall be insulated with heavy wall heat shrink tubing and shall be made so as to provide a watertight splice. Heat shrink sleeve shall overlap conductor insulation a minimum of 2 inches on both sides of the splice. Where heat shrink tubing may not shrink sufficiently to provide a watertight seal around the individual conductors, prior to heating the tubing, the contractor shall build up the conductors insulation using heat shrink filler tape to provide a watertight seal between the individual conductors and the heat shrink tubing. Tape shall be visible after completion of all splices. Where filler tape is used but not visible, the Engineer shall approve each individual splice by conducting a physical inspection of each splice. Heat shrink tape shall be either butyl rubber. When it appears the tubing has been burned, or overheated the tubing shall be considered to be defective.
5. Wire nuts may be used for #8 AWG or smaller conductors in above-ground junction boxes, but not in pole bases or ground boxes. Wire nuts shall be positioned upright to prevent the accumulation of water. Wire nuts used at these locations shall have factory applied waterproof sealant (silicone).
6. Conductors in illumination poles shall be supported by a J-hook in the top of the pole.
7. All conductors bid under Item 620 shall have breakaway electrical disconnects installed anytime conductors pass through a breakaway support.
8. For terminating the conductors, insulation-jacketing material shall be removed in such a manner as to not nick any of the individual strands of the conductor. When individual conductor strands are removed, the conductor shall be considered to be damaged.
9. When a conductor or cable has been damaged, or fails to pass an insulation resistance test, the conductor will be replaced.
10. Duct tape, black electrical tape, or wire nuts shall not be allowed to repair a damaged conductor.
11. For terminations, no more than one wire may be installed under a single pressure connector unless the device is listed for more than one wire.
12. Conductors connected to break-away in line fuse holders must be installed in accordance with the specific manufactures installation instructions. Where threaded connections are made, they shall be properly torqued. Where crimp type connections are made, crimps shall be made using properly sized crimping pliers. Proper conductor terminations are critical to the safe operation of break-away devices.
13. Waterproofing boots shall be properly trimmed to fit snugly around the conductor so as to provide a water proof connection. No more than one wire may enter a single opening in any one boot. Water proofing boots must provide the correct number of openings. Where only one wire is to be connected to a boot, the boot may not be a two wire type.

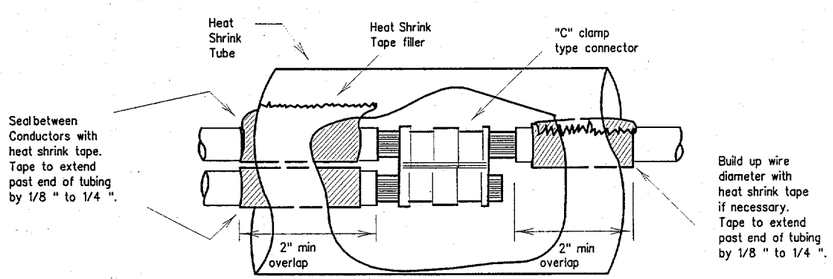

SPLICE OPTION 1

C-CLAMP

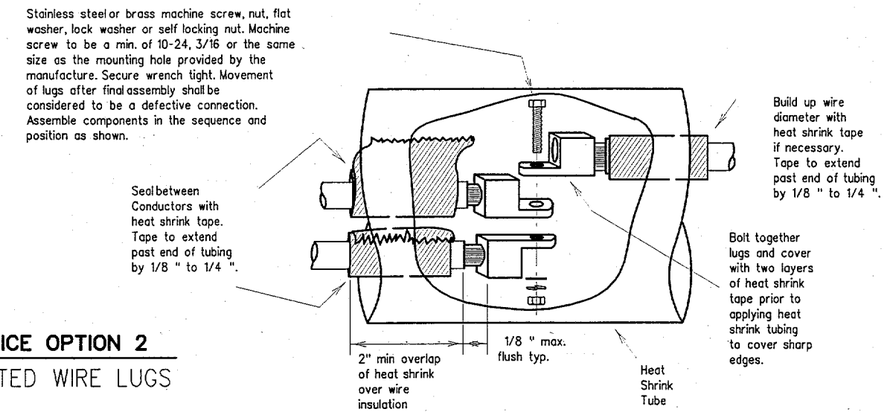

SPLICE OPTION 2

BOLTED WIRE LUGS

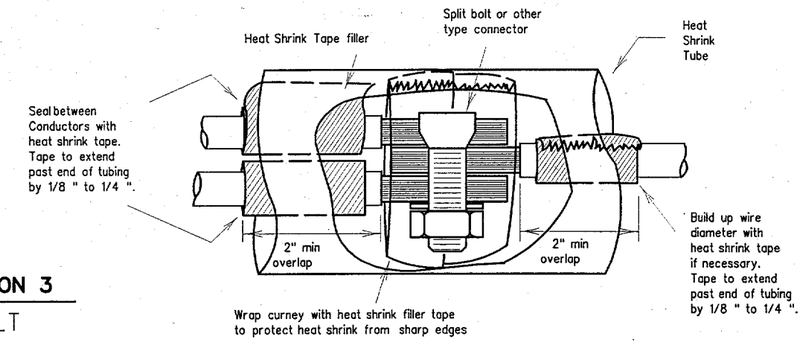

SPLICE OPTION 3

SPLIT BOLT

C. TEMPORARY WIRING

1. Temporary conductors and electrical equipment to provide power for utilization equipment, shall be installed in accordance with the NEC article 305. All temporary wiring materials and methods shall comply with the standard sheets. All power outlets for portable electrical equipment, power tools, ice machines, ice storage bins and refrigerators located out doors at grade, supplied from a utility power source, shall be provided with a ground fault circuit interrupter.
2. Residual current protective devices (GFCI) may be any one of the following: molded cord and plug set, receptacle, or circuit breaker type.
3. Where wire nuts are approved for temporary wiring, they shall be of the self-sealing type.
4. All conductor splices must be contained within a listed enclosure, ground box or be more than ten feet above grade vertically and more than five feet horizontally from any metal structure. Where temporary conductors are installed in any area that is likely to be subjected to vehicle traffic, or mobile construction equipment, the vertical clearance to ground shall be a least 18 feet when measured at the lowest point. Where power conductors are to be supported by a span wire, the span wire shall be properly grounded.

DISCLAIMER
The use of this standard is governed by the "Texas Engineering Practice Act". No warranty of any kind is made by TxDOT for any purpose whatsoever. TxDOT assumes no responsibility for the conversion of this standard to other formats or for incorrect results or damages resulting from its use.

LEVELS DISPLAYED
1 2 3 4 5 6 7 8 9 10 11 12 13 14 15 16
7 8 9 20 21 22 23 24 25 26 27 28 29 30 31 32
33 34 35 36 37 38 39 40 41 42 43 44 45 46 47 48
49 50 51 52 53 54 55 56 57 58 59 60 B263

DATE:
ACC:
FILE:
DN:
CK:
DW:
CK:

STANDARD PLANS
TEXAS DEPARTMENT OF TRANSPORTATION
Traffic Operations Division

ELECTRICAL DETAILS-CONDUCTORS

ED(2)-00

©TxDOT January 1992 | DN: KB | CK: JW | DW: DN | CK: GC | REG. NO.

REVISIONS	STATE DISTRICT	FEDERAL REGION	FEDERAL AID PROJECT	SHEET
5-93		6		13
10-93				
4-98	COUNTY		CONTROL / SECTION / JOB	HIGHWAY
12-00				