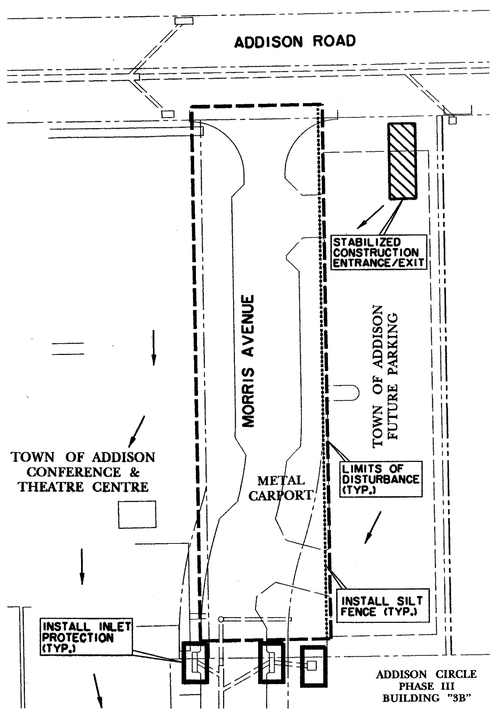

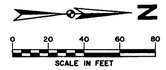

AREA OF DISTURBANCE
0.50 ACRES

NOTES:

1. SEE DRAINAGE AREA MAP FOR DRAINAGE AREAS AND CALCULATIONS.
2. SEE POLLUTION CONTROL DETAILS FOR TYPES OF INLET PROTECTION.

LEGEND:

- SILT FENCE
- INLET PROTECTION
- EXISTING CONTOURS
- DIRECTION OF RUNOFF
- LIMITS OF DISTURBANCE
- STABILIZED CONSTRUCTION ENTRANCE/EXIT

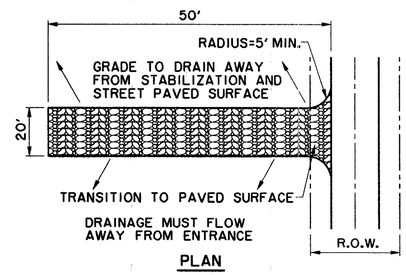

PLAN

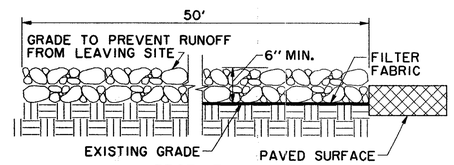

PROFILE

STABILIZED CONSTRUCTION ENTRANCE / EXIT

NCTCOG 02270.G
STORM WATER QUALITY
BEST MANAGEMENT PRACTICES
FOR CONSTRUCTION ACTIVITIES

DETAIL 'A'
N.T.S.

NOTES:

1. A NOTICE OF INTENT (N.O.I.) WILL BE PREPARED BY THE CONTRACTOR FOR THIS PROJECT IN ACCORDANCE WITH THE REQUIREMENTS OF THE N.P.D.E.S. GENERAL PERMIT FOR STORM WATER DISCHARGES ASSOCIATED WITH CONSTRUCTION.
2. ALL CONTRACTORS WILL COMPLY WITH THE REQUIREMENTS AND INTENT OF THE N.P.D.E.S. GENERAL PERMIT FOR STORM WATER DISCHARGES.
3. EACH CONTRACTOR SHALL SUBMIT A NOTICE OF INTENT (N.O.I.) FOR STORM WATER DISCHARGE PERMIT COVERAGE. THIS SUBMITTAL SHALL BE COORDINATED WITH THE TOWN AND SHALL OCCUR NO LESS THAN 48 HOURS PRIOR TO THE COMMENCEMENT OF ANY CONSTRUCTION ACTIVITY.
4. EACH CONTRACTOR SHALL OBTAIN AND SUBMIT TO TOWN A POLLUTION PREVENTION CERTIFICATION FROM EACH SUBCONTRACTOR WHOSE WORK IMPACTS THE STORM WATER POLLUTION PREVENTION PLAN (S.W.P.P.P.) PRIOR TO THE PERFORMANCE OF ANY WORK BY SAID SUBCONTRACTOR. THESE CERTIFICATIONS SHALL BECOME A PART OF THE STORM WATER POLLUTION PREVENTION PLAN.
5. CONTRACTOR SHALL INSTALL EROSION CONTROL MEASURES, AS INDICATED ON THE PLANS AND AS FIELD CONDITIONS WARRANT, PRIOR TO COMMENCING ANY CONSTRUCTION ACTIVITY. REPAIRS OR MODIFICATIONS TO THE MEASURES WILL BE MADE BY THE CONTRACTOR IF THE CONTROL MEASURES PROVE INEFFECTIVE OR IF ADDITIONAL CONTROL MEASURES ARE NECESSARY.
6. CONTRACTOR SHALL TAKE APPROPRIATE MEASURES TO PREVENT TRACKING OF MUD AND/OR SOILS ONTO EXISTING AND/OR NEW PAVEMENT. ANY TRACKING THAT OCCURS SHALL BE REMOVED IMMEDIATELY BY THE CONTRACTOR.
7. CONTRACTOR SHALL CONSTRUCT INLET PROTECTION FOR ALL INCOMPLETE CURB INLETS AND SHALL TAKE EVERY MEASURE TO KEEP SOILS AND SEDIMENTS FROM ENTERING THE STORM SEWER SYSTEM.
8. CONTRACTOR SHALL CONSTRUCT DROP INLET PROTECTION FOR ALL INCOMPLETE DROP INLETS AND SHALL TAKE EVERY MEASURE TO KEEP SOILS AND SEDIMENTS FROM ENTERINGTHE STORM SEWER SYSTEM.
9. AT A MINIMUM, PERIMETER CONTROLS SUCH AS SILT FENCE OR STRAW BALES SHALL BE INSTALLED AT ALL DOWN SLOPE BOUNDARIES AND AS WARRANTED WHERE PAVEMENT REMOVAL, UTILITY CONSTRUCTION, GRADING, OR OTHER CONSTRUCTION ACTIVITIES ARE TO BE PERFORMED. THE CONTRACTOR SHALL AT ALL TIMES TAKE SUCH MEASURES AS NECESSARY TO MINIMIZE OFFSITE TRACKING OR TRANSPORT OF SEDIMENT AND DEBRIS.
10. DAMAGE TO ADJACENT PROPERTY AND/OR TO RECEIVING WATERS CAUSED BY IMPROPERLY INSTALLED OR POORLY MAINTAINED EROSION CONTROL MEASURES WILL BE THE RESPONSIBILITY OF THE CONTRACTOR.
11. THE CONTRACTOR SHALL BE RESPONSIBLE FOR THE REMOVAL AND DISPOSAL OF ANY SILTATION CAUSED BY HIS OPERATIONS AND/OR FAILURE OF THE EROSION CONTROL MEASURES.
12. CONTRACTOR SHALL REMOVE AND PROPERLY DISPOSE OF ACCUMULATED SILT AND SEDIMENT FROM EROSION CONTROL MEASURES WHEN IT REACHES A DEPTH OF SIX (6) INCHES OR IMPAIRS THE EFFECTIVENESS OF THE MEASURES.
13. THE TOWN'S REPRESENTATIVE MAY INSPECT THE PROJECT EVERY SEVEN DAYS, AT A MINIMUM, AND AFTER EVERY RAINFALL OF ONE-HALF INCHES OR GREATER TO DETERMINE THE INTEGRITY AND EFFECTIVENESS OF THE EROSION CONTROL MEASURES. A WRITTEN INSPECTION REPORT MAY BE FILED WITH THE POLLUTION PREVENTION PLAN. THIS INSPECTION DOES NOT RELIEVE THE CONTRACTOR'S RESPONSIBILITY FOR INSPECTION AND MAINTENANCE OF THE EROSION CONTROL MEASURES OR HIS DUTY TO COMPLY WITH THE INTENT AND CONDITIONS OF THE N.P.D.E.S. GENERAL PERMIT.
14. ALL STOCKPILED SOILS WILL BE SURROUNDED BY A STRAW BALE DIKE, SILT FENCE, SEDIMENT CONTROL SWALE, OR EQUIVALENT MEASURE TO PROPERLY CONTROL SEDIMENT RUNOFF, AS APPROVED BY THE TOWN.
15. CONTRACTOR SHALL STABILIZE ANY AREA WHERE CONSTRUCTION ACTIVITY IS TO BE TEMPORARILY OR PERMANENTLY CEASED FOR MORE THAN 14 DAYS.

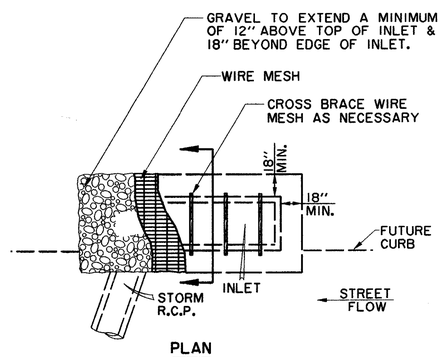

PLAN

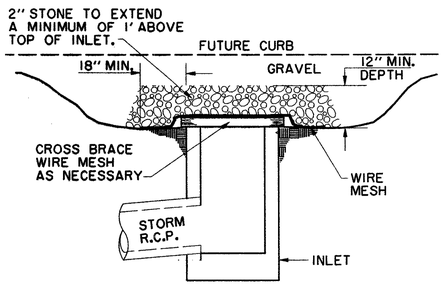

CROSS-SECTION

INLET PROTECTION WIRE MESH & GRAVEL

NCTCOG 02270.G
STORM WATER QUALITY
BEST MANAGEMENT PRACTICES
FOR CONSTRUCTION ACTIVITIES

DETAIL 'E'
N.T.S.

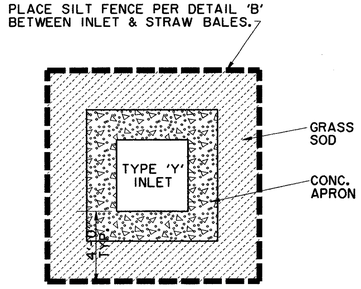

TYPE 'Y' PROTECTION (TYP.)

DETAIL 'F'
N.T.S.

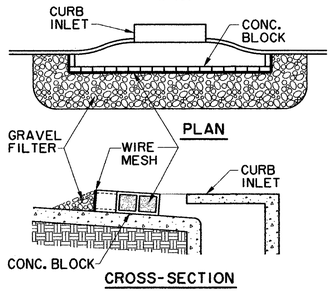

PLAN

CROSS-SECTION

INLET PROTECTION BLOCK & GRAVEL

NCTCOG 02270.G
STORM WATER QUALITY
BEST MANAGEMENT PRACTICES
FOR CONSTRUCTION ACTIVITIES

DETAIL 'G'
N.T.S.

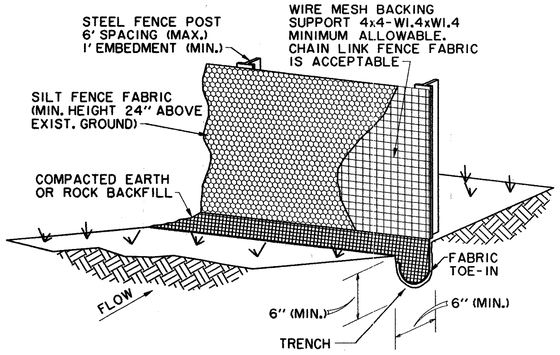

SILT FENCE SHOULD BE SECURELY FASTENED TO BACKING SUPPORT AND POSTS.

SILT FENCE

NCTCOG 02270.B
STORM WATER QUALITY
BEST MANAGEMENT PRACTICES
FOR CONSTRUCTION ACTIVITIES

DETAIL 'B'
N.T.S.

BENCHMARKS:

BM#5
"□" CUT ON 8' INLET ON NORTH CURB LINE OF GOODMAN AVE. ±75' EAST OF PASCHAL PLACE.
ELEV. 629.98

BM#6
"□" CUT AT ℄ OF 8' INLET AT THE SOUTHWEST CORNER OF MORRIS AVE. AND WITT PLACE.
ELEV. 627.29

BM#7
"□" CUT AT WEST CORNER OF ADDISON THEATRE CENTRE PARKING LOT. SECOND ENTRANCE NORTH OF ADDISON RD.
ELEV. 637.66

THE SEAL APPEARING ON THIS DOCUMENT WAS AUTHORIZED BY DAVID E. MEYERS, P.E. 81512

STATE OF TEXAS
DAVID E. MEYERS
81512
REGISTERED
PROFESSIONAL ENGINEER
5/29/01

DATE	DESCRIPTION	REF NO.
4/20/01	ISSUED FOR BID	N/A

POLLUTION CONTROL PLAN & DETAILS

MORRIS AVENUE EXTENSION

PUBLIC INFRASTRUCTURE

TOWN OF ADDISON, TEXAS

Huitt - Zollars, Inc.
3131 Mckinney Ave. Suite 600, Dallas, TX 75204
Phone (214) 871-3311/Fax (214) 871-0757

DESIGN	DRAWN	APPR.	SCALE	DATE	PROJECT NO.	NO.
HZI	HZI	DEM	1"=40'	APR. 2001	01-3000-01	14