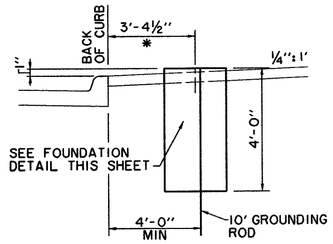

*UNLESS OTHERWISE NOTED IN PLANS

LIGHT FIXTURE PLACEMENT DETAIL

N.T.S.

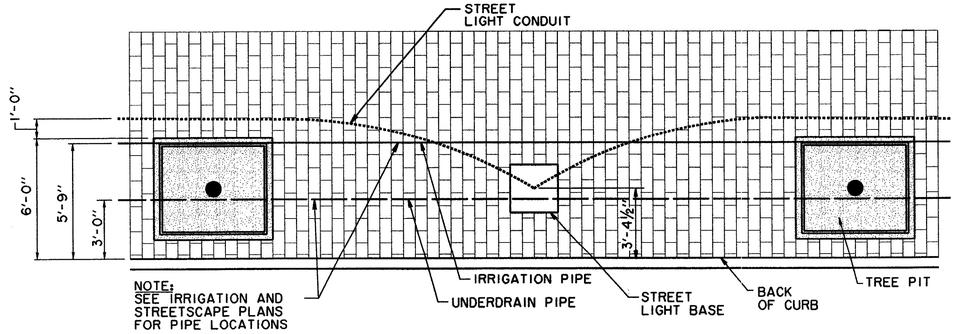

STREET LIGHT CONDUIT DETAIL

CONDUIT SHALL BE DEFLECTED AROUND TREE PIT LOCATIONS - TYPICAL

N.T.S.

STREET LIGHTING NOTES

1. THE STREET LIGHTING FOR THIS PROJECT WILL CONSIST OF INSTALLATION OF 2" PVC CONDUIT, LIGHT POLE BASES, PULL BOXES (HANDHOLES) LIGHT POLES, LUMINAIRES, WIRING AND CONNECTION TO TO POWER SOURCE AS A COMPLETE SYSTEM PER DETAILED SPECIFICATIONS.

2. ALL STREET LIGHTING CONDUIT IS TO BE INSTALLED WITH A MINIMUM OF 24 INCHES OF COVER TO THE TOP OF THE PIPE FROM FINISHED PAVEMENT TO AVOID CONFLICT WITH IRRIGATION LINES WHICH WILL BE AT 12" AND 18" DEPTH. CONDUIT SHOULD BE NO DEEPER THAN 36" TO AVOID CONFLICT WITH OTHER UTILITIES.

3. FOR THE PURPOSES OF COORDINATION, PEDESTRIAN LIGHTS TO BE INSTALLED PER THE STREETSCAPE PLANS FOR THIS PROJECT WILL BE THE FOLLOWING:

   SEE SHEET 15 FOR POLE TYPES.

   THIS POLE WILL BE INSTALLED WITH A 175 WATT METAL HALIDE BEGA 9801 ED-17MH/120V FIXTURE AND LUMINAIRE.

   POLES WILL BE PRIMED AND PAINTED AT THE FACTORY.

4. LOCATIONS OF ANY STREET LIGHTS MAY NOT BE ALTERED WITHOUT PERMISSION FROM THE ENGINEER.

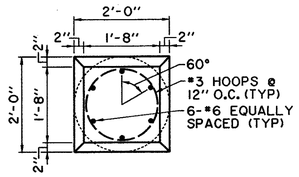

LIGHT FIXTURE FOUNDATION & CAP PLAN

N.T.S.

USE CAUTION WHEN SETTING ANCHOR BOLTS. BOLTS MUST BE VERTICALLY STRAIGHT AND CENTERED ON DIMENSIONS SHOWN.

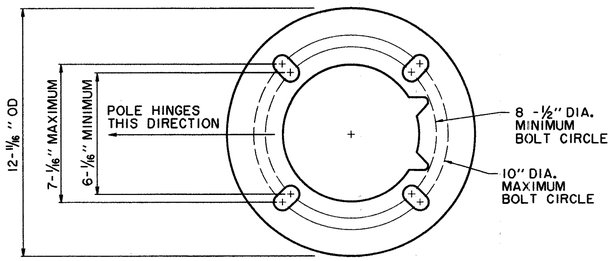

NOTE:
ADEQUATE DRAINAGE MUST BE PROVIDED IN CONCRETE FOUNDATION OR GROUT.

ROUND BOTTOM HINGE BASE ANCHOR BOLT TEMPLATE

N.T.S.

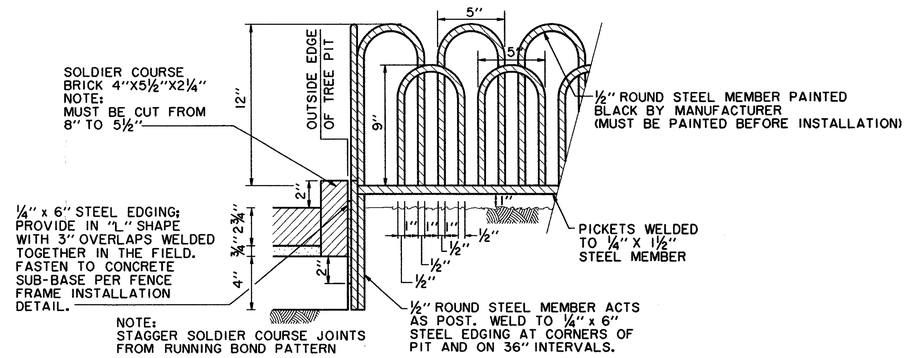

TREE FENCE (MORRIS AVENUE)

N.T.S.

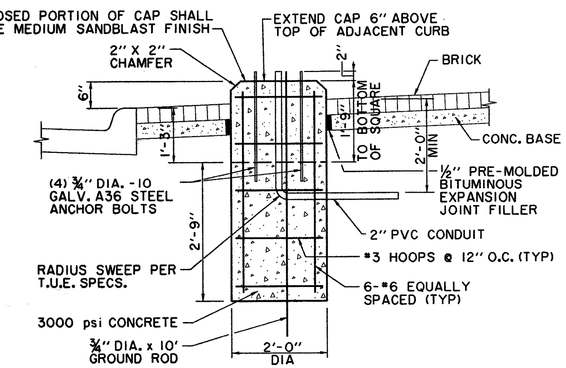

LIGHT FIXTURE FOUNDATION & CAP SECTION

N.T.S.

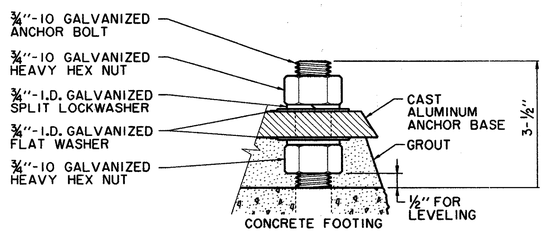

BOLT PROJECTION DETAIL

N.T.S.

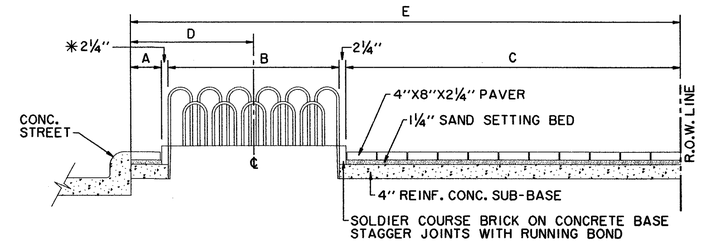

LOCATION	A	B	C	D	E
MORRIS AVENUE	8¼"	5'-0"	5'-11¼"	3'-4½"	12'-0"

THE SEAL APPEARING ON THIS DOCUMENT WAS AUTHORIZED BY DAVID E. MEYERS, P.E. 81512

STATE OF TEXAS
DAVID E. MEYERS
81512
REGISTERED
PROFESSIONAL ENGINEER
3/29/01

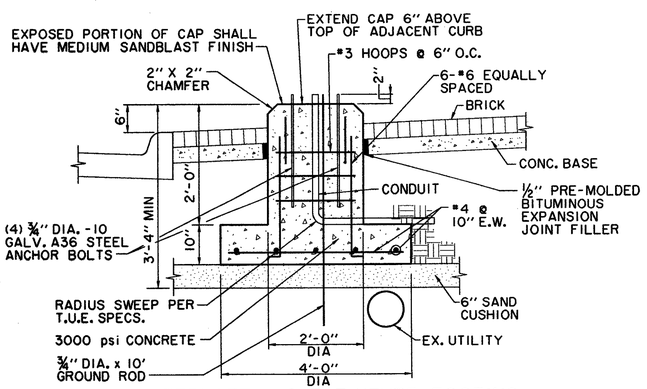

ALTERNATE LIGHT FIXTURE FOOTING AT UTILITY CONFLICT

N.T.S.

(NOT TO BE USED FOR HANGING LIGHT FOUNDATION)

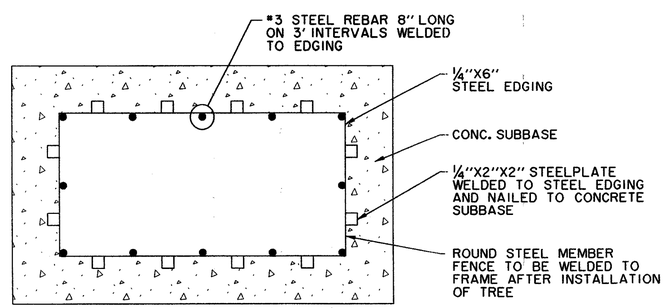

TREE FENCE FRAME INSTALLATION DETAIL

N.T.S.

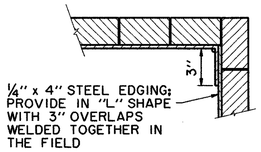

STEEL EDGING OVERLAP DETAIL

N.T.S.

DATE	DESCRIPTION	REF NO.
4/20/01	ISSUED FOR BID	N/A

STREETSCAPE DETAILS

MORRIS AVENUE EXTENSION

PUBLIC INFRASTRUCTURE

TOWN OF ADDISON, TEXAS

Huitt - Zollars, Inc.
3131 Mckinney Ave., Suite 600, Dallas, TX 75204
Phone (214) 871-3311/Fax (214) 871-0757

DESIGN	DRAWN	APPR.	SCALE	DATE	PROJECT NO.	NO.
HZI	HZI	DEM	N.T.S.	APR. 2001	01-3000-01	9